ABBREVIATIONS

ACC	AIR COOLED CONDENSER
AD	ACCESS DOOR
AFF	ABOVE FINISHED FLOOR
AP	ACCESS PANEL
ARCH.	ARCHITECT
BOD	BOTTOM OF DUCT
BTU	BRITISH THERMAL UNIT
BTUH	BRITISH THERMAL UNIT PER HOUR
C	CLOSED
CAP	CAPACITY
CC	COOLING COIL
CFM	CUBIC FEET PER MINUTE
CO	CLEAN OUT
CONN.	CONNECT
CONTR	CONTRACTOR
CP	CONTROL PANEL
CT	CURRENT TRANSFORMER
CV	CONTROL VALVE
DB	DRY BULB TEMPERATURE (°F)
DIA.	DIAMETER
DR	DRAIN
DWG	DRAWING
EA.	EACH
EA	EXHAUST AIR
EAT	ENTERING AIR TEMPERATURE
EC	ELECTRICAL CONTRACTOR
EF	EXHAUST FAN
EL	EXPANSION LOOP
ER	EXHAUST AIR REGISTER
ESP	EXTERNAL STATIC PRESSURE
EWT	ENTERING WATER TEMPERATURE
FA	FREE AREA
FCU	FAN COIL UNIT
FLA	FULL LOAD AMPS
FPI	FINS PER INCH
FPM	FEET PER MINUTE
FSD	COMBINATION FIRE AND SMOKE DAMPER
FT	FEET
F&T	FLOAT & THERMOSTATIC
GAL	GALLONS
GC	GENERAL CONTRACTOR
GE	GENERAL EXHAUST
GPM	GALLONS PER MINUTE
HC	HEATING COIL
HP	HORSE POWER
HVAC	HEATING, VENTILATION AND AIR CONDITIONING
IN	INCHES
ID	INSIDE DIAMETER
KW	KILOWATTS
LAT	LEAVING AIR TEMPERATURE
LD	LOUVERED DOOR
LWT	LEAVING WATER TEMPERATURE
MBH	THOUSAND BRITISH THERMAL UNITS PER HOUR
MECH	MECHANICAL
NC	NORMALLY CLOSED
NIC	NOT IN CONTRACT
NO	NORMALLY OPEN
NTS	NOT TO SCALE
OA	OUTSIDE AIR
OAI	OUTSIDE AIR INTAKE
OAT	OUTSIDE AIR TEMPERATURE
OBD	OPPOSED BLADE DAMPER
OED	OPEN END DUCT
OD	OUTSIDE DIAMETER
PC	PLUMBING CONTRACTOR
PD	PRESSURE DROP
PSI	POUNDS PER SQUARE INCH
RA	RETURN AIR
RM	ROOM
RR	RETURN AIR REGISTER
SA	SUPPLY AIR
SAT	SUPPLY AIR TEMPERATURE
SF	SQUARE FEET
SP	STATIC PRESSURE
SPD	SPEED
SR	SUPPLY AIR REGISTER
SST	SATURATED SUCTION TEMPERATURE
TA	TRANSFER AIR
TD	TRANSFER AIR DUCT
TR	TRANSFER AIR REGISTER
TSTAT	THERMOSTAT
TYP	TYPICAL
UC	UNDERCUT DOOR
VFD	VARIABLE FREQUENCY DRIVE
WB	WET BULB TEMPERATURE (°F)
WMS	WIRE MESH SCREEN

EQUIPMENT TAGS

ACCU	AIR COOLED CONDENSING UNIT
AHU	AIR HANDLING UNIT
B	BOILER
CD	CEILING DIFFUSER
CP	CONDENSATE PUMP
CUH	CABINET UNIT HEATER (STEAM OR WATER)
EG	EXHAUST GRILLE
ER	EXHAUST REGISTER
ERV	ENERGY RECOVERY VENTILATION UNIT
EUH	ELECTRIC UNIT HEATER
F	FAN (GENERIC)
FCU	FAN COIL UNIT
GF	GAS FURNACE
HP	HEAT PUMP
HX	HEAT EXCHANGER
L	LOUVER
RG	RETURN GRILLE
RR	RETURN REGISTER
SA	SOUND ATTENUATOR
SD	SUPPLY DIFFUSER
SG	SUPPLY GRILLE
SR	SUPPLY REGISTER
TG	TRANSFER GRILLE
UH	UNIT HEATER
VI	VIBRATION ISOLATION

CONTROL SCHEMATIC LEGEND

CO	CO SENSOR
CO2	CO2 SENSOR
SP1	STATIC PRESSURE SENSOR
DPS	DIFFERENTIAL PRESSURE SENSOR
T	HEAT/COOL THERMOSTAT
T R	REVERSE ACTING THERMOSTAT
$	SWITCH CONTROLLER
C	TIME CLOCK CONTROLLER
TS	TEMPERATURE SENSOR
VFD	VARIABLE FREQUENCY DRIVE
DSD	DUCT SMOKE DETECTOR
F	FREEZE STAT
	CONTROL LINE

DAMPERS

M	ACD	MOTORIZED OR AUTOMATIC CONTROL DAMPER
B	B	BAROMETRIC DAMPER
S	SD	SMOKE DAMPER
BD	BD	BACK DRAFT DAMPER
FD	FD	FIRE DAMPER
FS	FS	FIRE & SMOKE DAMPER
RD	RD	RADIATION DAMPER
VD	VD	VOLUME DAMPER
		DAMPER

AIR DEVICE LEGEND

CO	CLEANOUT
SG	SIDEWALL SUPPLY REGISTER
SD	SUPPLY DIFFUSER
RR	RETURN GRILLE
ER	EXHAUST REGISTER OR GRILLE
EG/RG	SIDEWALL EXHAUST/RETURN REGISTER
SD/R	SUPPLY DIFFUSER OR REGISTER BELOW DUCT
RR	RETURN REGISTER OR GRILLE BELOW DUCT
R	EXHAUST REGISTER OR GRILLE BELOW DUCT
	SUPPLY AIR
	RETURN OR EXHAUST AIR
	UNDERCUT DOORWAY (BY G.C.)

VALVE LEGEND

IS	ISOLATION VALVE REFER TO DETAILS AND SPEC.
GV	GATE VALVE
GLV	GLOBE VALVE
BLV	BALL VALVE
BFV	BUTTERFLY VALVE
DV	DRAIN VALVE
SCV	SWING CHECK VALVE
LCV	LIFT CHECK VALVE
BC	BALANCE COCK
BV	BALANCE VALVE
PRV	PRESSURE REDUCING VALVE
RV	RELIEF VALVE
ACV	TWO WAY AUTOMATIC CONTROL VALVE
ACV	THREE WAY AUTOMATIC CONTROL VALVE
SC	SELF CONTAINED CONTROL VALVE
	UNION
FLG	FLANGE
PLS	PIPE LINE STRAINER
BKS	BASKET STRAINER
TRM	THERMOMETER
PG	PRESSURE GAUGE
FSW	FLOW SWITCH
AAV	AUTOMATIC AIR VENT
MAV	MANUAL AIR VENT
FMS	FLOW MEASURE STATION
PT	PRESSURE/TEMPERATURE PLUG
	PIPE CAP
	STRAINER WITH DRAIN VALVE AND CAP
MAV	MANUAL AIR VENT
	LUBE TYPE TEST COCK
	TRIPLE DUTY VALVE
	HOSE END DRAIN VALVE
	OS&Y GATE VALVE

DRAWING NOTES

10"Ø, 12"x12" SG-A, RG-A or EG-A
200 CFM
(TYP. OF 3)

- NECK SIZE OR LENGTH IF LINEAR DIFFUSER
- SUPPLY/RETURN/EXHAUST REGISTER OR GRILLE
- AIR VOLUME (CFM)
- QUANTITY

12"x12", SD
200 CFM
(TYP. OF 3)

- NECK SIZE OR LENGTH IF LINEAR DIFFUSER
- SUPPLY DIFFUSER DESIGNATION
- AIR VOLUME (CFM)
- QUANTITY

ACCU-1 — EQUIPMENT DESIGNATION

1	DRAWING REVISION NOTE
1	DRAWING WORK NOTE
1	DRAWING WORK NOTE
1	DRAWING WORK NOTE
	CONNECT TO EXISTING
	CAP EXISTING
	LIMIT OF DEMOLITION
	REVISION CLOUD

DUCTWORK LEGEND

12"x8"	RECTANGULAR DUCTWORK – FIRST DIMENSION IS SIDE SHOWN (IN.)
12"ø	ROUND DUCTWORK – DIMENSION IS DUCT DIAMETER (IN.)
	RECTANGULAR SUPPLY DUCTWORK UP
	RECTANGULAR SUPPLY DUCTWORK DOWN
	RECTANGULAR RETURN/EXHAUST DUCTWORK UP
	RECTANGULAR RETURN/EXHAUST DUCTWORK DOWN
	ROUND DUCTWORK UP
	ROUND DUCTWORK DOWN
	CAPPED DUCTWORK
	ACOUSTICALLY LINED DUCTWORK
	FLEXIBLE CONNECTION
	RECTANGULAR TRANSITION
	RECTANGULAR TO ROUND DUCTWORK TRANSITION
	MITERED ELBOW WITH TURNING VANES
UP	CHANGE OF ELEVATION UP IN DIRECTION OF AIRFLOW
DN	CHANGE OF ELEVATION DOWN IN DIRECTION OF AIRFLOW

PIPING LEGEND

RGL	RGL	REFRIGERANT SUCTION
RLL	RLL	REFRIGERANT LIQUID
RHG	RHG	REFRIGERANT HOT GAS
CD	CD	A.C. CONDENSATE DRAIN
o	PC	PUMPED CONDENSATE
V	V	VENT
		PIPING TO BE REMOVED
		EXISTING PIPING TO REMAIN
		PIPE OFF BOTTOM
		PIPE OFF TOP
		RUN-OUT OFF TOP
		RUN-OUT OFF BOTTOM
		BRANCH CONNECTION (DIRECTION TO BE FIELD DETERMINED)
		PIPE UP
		PIPE DOWN
		STUB UP TO TERMINAL
		DIRECTION OF FLOW
		PIPE BREAK
		DRAIN PIPE PITCH AND FLOW

GENERAL NOTES

1. MECHANICAL WORK INDICATED IS DIAGRAMMATIC. EXACT LOCATIONS OF ALL COMPONENTS ARE TO BE DETERMINED IN THE FIELD (SPACING SUBJECT TO ARCHITECT'S REVIEW AND APPROVAL) TO AVOID CONFLICT WITH OTHER TRADES AND EXISTING SITE CONDITIONS.
2. THE CONTRACTOR SHALL VISIT AND CAREFULLY EXAMINE THE SITE TO IDENTIFY EXISTING CONDITIONS AND DIFFICULTIES THAT WILL AFFECT THE WORK OF THIS SECTION. REPORT IN WRITING TO THE ARCHITECT CONDITIONS WHICH MIGHT ADVERSELY AFFECT WORK. NO EXTRA PAYMENT WILL BE PROVIDED FOR ADDITIONAL WORK CAUSED BY UNFAMILIARITY WITH SITE CONDITIONS THAT ARE VISIBLE OR READILY CONSTRUED BY AN EXPERIENCED OBSERVER.
3. REFER TO ARCHITECTURAL PLANS FOR EXACT LOCATION OF CEILING GRID, DIFFUSERS, AND GRILLES.
4. ALL INSTALLATIONS SHALL PERMIT AND PROVIDE ACCESSIBILITY FOR SERVICE AND REPLACEMENT OF ALL NEW EQUIPMENT.
5. COORDINATE ALL OPENINGS IN FLOORS WITH STRUCTURAL DRAWINGS AND GENERAL CONTRACTOR.
6. COORDINATE ALL ROOF OPENINGS WITH ARCHITECT AND STRUCTURAL ENGINEER.
7. REFER TO STRUCTURAL FRAMING PLANS FOR EXACT LOCATION OF ALL ROOF MOUNTED EQUIPMENT.
8. ALL MECHANICAL EQUIPMENT, PIPING, AND DUCTWORK SHALL BE INSTALLED IN ACCORDANCE WITH THE REQUIREMENTS OF GOVERNING LOCAL, STATE, AND FEDERAL SEISMIC CODES. PARTICULAR ATTENTION SHALL BE MADE TO VIBRATION ISOLATION, ANCHORING, AND BALANCING REQUIREMENTS.
9. INSTALL SMOKE DETECTORS WHERE SHOWN ON THE ELECTRICAL DRAWINGS. COORDINATE THE LOCATION WITH SHEET METAL SHOP DRAWINGS, TO BE PRODUCED BY MECHANICAL CONTRACTOR, AND APPROVED BY ENGINEER. ELECTRICAL CONTRACTOR SHALL PROVIDE SMOKE DETECTORS IN SUPPLY AND RETURN DUCTS ON ALL AIR HANDLERS AND ROOF TOP UNITS AS SHOWN ON THE ELECTRICAL DRAWINGS.
10. ALL DUCTWORK SHALL BE INSTALLED IN ACCORDANCE WITH CODES AND STANDARDS SET FORTH IN NFPA, SMACNA, AND ASHRAE FOR MEDIUM AND LOW PRESSURE DUCTWORK SYSTEMS.
11. ALL EXPOSED DUCTWORK SHALL BE PAINTED TO MATCH CEILING. REFER TO ARCHITECTURAL DRAWINGS.
12. PROVIDE MANUAL VOLUME DAMPERS AT ALL BRANCH DUCTS FOR AIR BALANCING.
13. ALL SHEET METAL PLENUMS AT OUTSIDE AIR LOUVERS SHALL BE INSULATED WITH RIGID INSULATION, AS PER SPECIFICATION.
14. RUN-OUTS TO RETURN AND EXHAUST REGISTERS, OR GRILLES ABOVE GYP BOARD CEILINGS, SHALL BE RIGID DUCTED. NO FLEXIBLE DUCT WORK SHALL BE ALLOWED ON RETURN OR EXHAUST REGISTERS.
15. ALL DUCTS, PIPES, AND EQUIPMENT SHALL BE INDEPENDENTLY SUPPORTED FROM THE BUILDING STRUCTURE WITH PROPER ALLOWANCES FOR CONTRACTION, EXPANSION, AND VIBRATION ELIMINATION.
16. PROVIDE SWING JOINTS AT ALL BRANCH CONNECTIONS TO HYDRONIC EQUIPMENT.
17. ROOM THERMOSTATS SHALL BE MOUNTED 4'-0" ABOVE FINISHED FLOOR UNLESS OTHERWISE SHOWN OR DIRECTED.
18. COORDINATE EXACT LOCATION OF UNIT HEATERS WITHIN ELECTRIC ROOMS WITH ELECTRICAL CONTRACTOR.
19. REFER TO SPECIFICATIONS FOR TYPE OF VALVE TO BE USED. VALVES ARE SHOWN ON PLANS FOR PLACEMENT ONLY.
20. ALL DUCT DIMENSIONS SHOWN ARE INSIDE CLEAR FREE AREA REQUIRED.
21. ALL DIFFUSER, REGISTER, AND GRILLE SIZES INDICATED ON FLOOR PLANS ARE NECK SIZE REQUIRED.
22. ALL REGISTERS TO BE INSTALLED WITH VOLUME DAMPERS.
23. ALL PIPING IS TO BE SLOPED A MINIMUM OF 1/4" PER HUNDRED FEET IN THE DIRECTION OF DRAINAGE.
24. NOT ALL SYMBOLS OR ABBREVIATIONS ARE USED ON THIS PROJECT.
25. COORDINATE ENTIRE INSTALLATION WITH THE WORK OF ALL OTHER TRADES PRIOR TO ANY FABRICATION OR INSTALLATIONS.
26. ALL PIPING AND DUCTWORK SHOWN IS DIAGRAMMATIC ONLY. DETERMINE THE EXACT LOCATION IN THE FIELD.
27. REVIEW ALL ARCHITECTURAL, STRUCTURAL, PLUMBING, ELECTRICAL, FIRE PROTECTION AND SITE DRAWINGS BEFORE STARTING ANY WORK TO BECOME FAMILIAR WITH THE DETAILS OF CONSTRUCTION, AND COORDINATE WITH OTHER TRADES.
28. OBTAIN ALL REQUIRED PERMITS AND PAY ALL FEES RELATED TO SAME.
29. PROVIDE ALL NECESSARY PIPING, EQUIPMENT AND SUPPORTS AS WELL AS ANY ADDITIONAL EQUIPMENT, ETC. NOT SHOWN ON THE DRAWINGS OR CALLED FOR IN THE SPECIFICATIONS BUT NECESSARY TO PROVIDE COMPLETE AND WORKABLE SYSTEMS.
30. PROVIDE ACCESS TO ALL EQUIPMENT REQUIRING PERIODIC SERVICE AND MAINTENANCE.
31. DO NOT SCALE THESE DRAWINGS. TAKE ALL MEASUREMENTS IN THE FIELD IN COORDINATION WITH ALL EQUIPMENT AS APPROVED AND WITH ALL OTHER TRADES.
32. ALL REFRIGERANT PIPING SHALL BE INSULATED IN ACCORDANCE WITH THE MASSACHUSETTS STATE BUILDING CODE.
33. ALL PIPING HIGH POINTS SHALL HAVE 3/4 INCH VENTS AND LOW POINTS SHALL HAVE 3/4" DRAINS.
34. ALL ROTATING EQUIPMENT SHALL HAVE FLEXIBLE PIPE ON DUCT CONNECTIONS AND APPROVED VIBRATION ISOLATORS.
35. PROVIDE AIRTIGHT ACCESS DOOR FOR INSPECTION OF FIRE DAMPERS, FILTERS, AND COILS.
36. CONTRACTOR SHALL VERIFY DUCT, PIPING AND EQUIPMENT LOCATIONS FOR INTERFERENCES BEFORE INSTALLATION.
37. ALL EQUIPMENT SHALL BE INSTALLED IN STRICT ACCORDANCE WITH MANUFACTURER'S WRITTEN INSTALLATION INSTRUCTIONS.
38. PROVIDE VERTICAL SUPPORTS FOR PIPING AT THE FOLLOWING MAXIMUM INTERVALS; 15' FOR 6"& 5" DIAMETER PIPE; 12' FOR 4" DIAMETER PIPE; 10' FOR 3" & 2-1/2" DIAMETER PIPE; 8' FOR 2" DIAMETER PIPE; 7' FOR 1-1/2 & 1-1/4" DIAMETER PIPE; 5' FOR 1" & 3/4" DIAMETER PIPE.
39. ALL DUCTWORK A MINIMUM OF 10 FT FROM SUPPLY, RETURN, AND EXHAUST CONNECTIONS TO ALL AIR HANDLING UNITS TO BE INSTALLED WITH ACOUSTICAL LINING.
40. FOR EQUIPMENT SCHEDULES SEE DRAWING H0.02.
41. DETAILS SHOWN ON SHEETS H0.03 TO H0.05 ARE APPLICABLE TO ALL EQUIPMENT, EXCEPT WHERE INDICATED.
42. FOR SEQUENCES OF OPERATION, SEE DRAWINGS H0.06 AND H0.07.

JD LaGrasse
Architects - Engineers - Interiors - Land Planning
One Elm Square, Andover, MA 01810
T. 978-470-3675 F. 978-470-3670
www.lagrassearchitects.com - E-mail: JDLA@AOL.COM

BLW
BLW Engineers, Inc.
311 Great Road, Post Office Box 1551
Littleton, Massachusetts 01460
t: 978.486.4303 f: 978.428.0067
www.blwengineers.com
HVAC • Electrical • Plumbing • Fire Protection

STRUCTURAL ENGINEER: VEITAS & VEITAS ENGINEERS
CIVIL ENGINEER: MERIDIAN ASSOCIATES INC.
MEP: BLW ENGINEERS INC.

HATTERS POINT
AMESBURY, MA

prepared for: HATTERS POINT CAPITAL LLC.
location: PO BOX 1044 SUDBURY, MA 01776
title: HVAC LEGEND AND NOTES

JDLAI 2015 ©
ALL PLANS, SPECIFICATIONS AND IDEAS ARE THE PROPERTY OF JDLAI. RIGHTS OF USE ARE CONDITIONAL AND ARE GRANTED UNDER FULL COMPENSATION AND LIMITED TO A ONE-TIME USE TO CONSTRUCT A SINGLE PROJECT ON THE SITE SO INDICATED. USE OF THE WORK AND ANY DERIVATIVE WORK COVERED UNDER THIS COPYRIGHT FOR OTHER PROJECTS IS PROHIBITED. THE USE OR REPRODUCTION OF THESE PLANS FOR ANY OTHER CONSTRUCTION OR PERMIT APPLICATION IS STRICTLY PROHIBITED WITHOUT PRIOR WRITTEN PERMISSION OF JDLAI.

Mark	Date
–	Revision #5 – 01.15.16
2	ICC Review Comments
–	Permit Set
–	CD Pricing Set
–	Construction Docs Progress
–	Design Development Set

Revisions

Date	11.15.2015
Scale	AS NOTED
Job No.	2394
Sheet No.	H0.01

BOILER SCHEDULE – GAS FIRED

TAG No.	LOCATION(S) SERVED	MANUFACTURER (AS STANDARD)	MODEL (AS STANDARD)	TYPE	GROSS OUTPUT MBH	NET I=B=R MBH	BURNER INPUT	MIN GAS PRES IN WC	ELECTRICAL DATA VOLTS	PHASE	FLA	REMARKS
B-1	REFER TO DRAWINGS	BUDERUS	SSB399	CONDENSING	386	–	399	3.5	120	1	4.5	PROVIDE CONTROLS, LOW WATER CUTOFF, ACID NEUTRALIZER, BOILER CIRCULATION PUMP
B-2	REFER TO DRAWINGS	BUDERUS	SSB399	CONDENSING	386	–	399	3.5	120	1	4.5	PROVIDE CONTROLS, LOW WATER CUTOFF, ACID NEUTRALIZER, BOILER CIRCULATION PUMP

FAN COIL UNIT SCHEDULE

TAG No.	MANUFACTURER (AS STANDARD)	MODEL No. (AS STANDARD)	TYPE	DX COOLING DATA MBH TOTAL	MBH SENS	EAT °F DB/WB	LAT DB/WB	HEATING DATA WPD (FT)	MBH TOTAL	EAT °F	LAT °F	EWT °F	LWT °F	GPM	FAN DATA CFM (IN. W.C.)	ESP	ELECTRICAL DATA VOLTS	PHASE	HP	MCA	REMARKS
FCU-A	FIRST CO.	32CDX-HW	HORIZONTAL RECESSED	30	–	81/68	56/55	8.5	29.5	64	90	140	120	4.0	1025	0.25	120	1	1/5	4.6	PROVIDE WITH DISCONNECT SWITCH, VIBRATION ISOLATORS, HANGERS AND MOUNTING BRACKETS, CONDENSATE OVERFLOW SWITCH, FULLY INSULATED ENCLOSURE, PUMP MODULE, RETURN PLENUM WITH FILTER RACK AND MERV8 FILTER, R-410A COOLING COIL AND HOT WATER COIL, LITTLE GIANT CONDENSATE PUMP.

NOTES:
1. COOLING COIL AND PAIRED CONDENSING UNIT COMBINATION SHALL MEET MINIMUM SEER RATING OF 16.0

CABINET UNIT HEATER SCHEDULE

TAG No.	MANUFACTURER (AS STANDARD)	MODEL No. (AS STANDARD)	TYPE	AIR DATA CFM	EAT(°F)	LAT(°F)	HOT WATER CAPACITY EWT(°F)	LWT(°F)	MBH	GPM	WPD	ELECTRICAL DATA VOLTS	PHASE	HP	REMARKS
CUH-A	STERLING	FS-1005-02	SLOPED	230	60	90	140	120	16.4	1.6	0.15	120	1	1 @ 1/15	PROVIDE DISCONNECT SWITCH, T'STAT, ECM MOTOR WITH CONTROLLER, LIMITED ACCESS FASTENERS, LEVELING LEGS
CUH-B	STERLING	FS-1005-02	SLOPED	230	60	90	140	120	16.4	1.6	0.15	120	1	1 @ 1/15	PROVIDE DISCONNECT SWITCH, T'STAT, ECM MOTOR WITH CONTROLLER, LIMITED ACCESS FASTENERS, LEVELING LEGS, RIGHT HAND COILING CONNECTION
CUH-C	STERLING	RC-1200-02	CEILING RECESSED	225	60	90	140	120	25.8	2.6	0.34	120	1	1 @ 1/15	PROVIDE DISCONNECT SWITCH, T'STAT, ECM MOTOR WITH CONTROLLER, LIMITED ACCESS FASTENERS, WALL SEAL KIT, HIGH CAPACITY 2 ROW COIL
CUH-D	STERLING	RC-1200-06	CEILING RECESSED	630	60	90	140	120	48.0	4.8	1.00	120	1	1 @ 1/15	PROVIDE DISCONNECT SWITCH, T'STAT, ECM MOTOR WITH CONTROLLER, LIMITED ACCESS FASTENERS, WALL SEAL KIT

NOTES:
1. COORDINATE FINISH & COLOR WITH ARCHITECT.

UNIT HEATER SCHEDULE

TAG No.	LOCATION(S) SERVES	MANUFACTURER	MODEL No.	TYPE	AIR DATA CFM	EAT(°F)	LAT(°F)	ELECTRIC CAPACITY MBH	KW	ELECTRICAL DATA VOLTS	PHASE	HZ	REMARKS
UH-A	REFER TO DRAWINGS	QMARK	MUH0381	HORIZONTAL	350	55	90	10.2	3	208	1	60	PROVIDE WALL MOUNTING BRACKETS INTEGRAL T'STAT, DISCONNECT SWITCH
UH-B	REFER TO DRAWINGS	QMARK	MUH0381	HORIZONTAL	350	55	90	10.2	3	208	1	60	PROVIDE WALL MOUNTING BRACKETS INTEGRAL T'STAT, DISCONNECT SWITCH

NOTES:
1. COORDINATE FINISH & COLOR WITH ARCHITECT.

GAS FIRED UNIT HEATER SCHEDULE

TAG No.	MANUFACTURER (AS STANDARD)	MODEL No. (AS STANDARD)	TYPE	AIR DATA CFM	EAT(°F)	LAT(°F)	HEATING CAPACITY INPUT MBH	OUTPUT MBH	ELECTRICAL DATA VOLTS	PHASE	WATTS	FLA	MOCP	REMARKS
GUH-A	REZNOR	UEAS-130	HORIZONTAL	2256	40	100	131	122	115	1	657	6.3	15	PROVIDE WITH 2-STAGE HEAT, ENCLOSED MOTOR, CONDESATE TEE, HANGING BRACKET, TSTAT, VENT CONCENTRIC ADAPTER, DISCONNECT SWITCH, ISOLATION HANGERS,
GUH-B	REZNOR	UEAS-180	HORIZONTAL	2458	40	100	175	159	115	1	675	6.3	15	PROVIDE WITH 2-STAGE HEAT, ENCLOSED MOTOR, CONDESATE TEE, HANGING BRACKET, TSTAT, VENT CONCENTRIC ADAPTER, DISCONNECT SWITCH, ISOLATION HANGERS,

AIR COOLED HEAT PUMP SCHEDULE

TAG No.	LOCATION(S) SERVED	MANUFACTURER	MODEL #	TYPE	MBH COOLING	HEATING	ELECTRICAL DATA MOD #	VOLTS	PHASE	MCA	MOP	OPERATING WEIGHT	REMARKS
HP-1	PAC-1	TRANE	4TXK8518A10N0BA	AIRCOOLED	18	19.8	1	208	1	16	20	50	PROVIDE DISCONNECT SWITCH, LOW AMBIENT OPERATION
HP-2	PAC-2	TRANE	4TXK8518A10N0BA	AIRCOOLED	18	19.8	1	208	1	16	20	50	PROVIDE DISCONNECT SWITCH, LOW AMBIENT OPERATION

EXPANSION TANK

TAG No.	LOCATION(S) SERVED	MANUFACTURER (AS STANDARD)	MODEL No. (AS STANDARD)	TYPE	TANK VOLUME GALLONS	TANK ACCEPTANCE VOLUME GALLONS
ET-1	MECHANICAL ROOM	AMTROL	AX-60V	DIAPHRAGM	33.6	11.3

PACKAGE AIR CONDITIONER SCHEDULE

UNIT NO.	LOCATION(S) SERVED	MANUFACTURER (AS STANDARD)	MODEL # (AS STANDARD)	TYPE	CFM LOW	CFM HIGH	EAT (F) DB	EAT (F) WB	LAT (F) DB	LAT (F) WB	COOLING DATA TC (MBH)	SC (MBH)	ELECTRICAL DATA VOLTS	PHASE	FAN NO./W	MCA	RLA	SEER	REMARKS
PAC-1	ELEV. MACH. ROOM.	TRANE	4MXW8518A10N0CA	FAN COIL	324	501	–	–	–	–	18	--	208	1	1/2.5	–	0.32	18.0	PROVIDE DISCONNECT SWITCH, THERMOSTAT, & FILTER SECTION,
PAC-2	ELEV. MACH. ROOM.	TRANE	4MXW8518A10N0CA	FAN COIL	324	501	–	–	–	–	18	--	208	1	1/2.5	–	0.32	18.0	PROVIDE DISCONNECT SWITCH, THERMOSTAT, & FILTER SECTION,

NOTES:
1. PROVIDE LITTLE GIANT CONDENSATE PUMP (CP-1); MODEL VCC-20ULS, 120/1/60.

PIPE SCHEDULE

SERVICE	LOCATION	PIPING	FITTINGS	JOINTS
REFRIGERANT PIPING	ABOVE GROUND	COPPER – ARC	COPPER, NO LEAD	BRAZED
DRAINS	ABOVE GROUND	COPPER – ARC	COPPER, NO LEAD	BRAZED
HYDRONIC HEATING 2-1/2" AND SMALLER	ABOVE GROUND	TYPE "L" SEAMLESS COPPER TUBING	WROUGHT COPPER, PRESSURE FITTING	MECHANICAL CONNECTION OR SWEAT SOLDER
HYDRONIC HEATING 3" AND LARGER	ABOVE GROUND	SCHEDULE 40 SEAMLESS BLACK STEEL	SCHEDULE 40 SEAMLESS	MECHANICAL CONNECTION OR WELDED

HYDRAULIC SEPARATOR SCHEDULE

TAG No.	SERVED	LOCATION	MANUFACTURER (AS STANDARD)	MODEL No. (AS STANDARD)
AS-1	HEATING HW	MECHANICAL RM	SPIROVENT	VDX300

REGISTER, GRILLE & DIFFUSER SCHEDULE

TAG	TYPE	CFM	NECK SIZE	FRAME TYPE	MOUNTING	DAMPER	MATERIAL	FINISH	MANUFACTURER/MODEL No.	NC	NECK VELOCITY FPM
CD-1	SUPPLY	–	–	SQUARE	LAY-IN	YES	ST	WHITE	TITUS/TDCA	25	<=500
CD-2	SUPPLY	–	–	SQUARE	SURFACE	YES	ST	WHITE	TITUS/TDCA	25	<=500
SR	SUPPLY	–	–	REC.	SIDEWALL	YES	ST	WHITE	PRICE/720D	25	<=500
RG	RETURN	–	–	REC.	CEILING/SIDEWALL	YES	ST	WHITE	TITUS/350 RL	25	<=400
RR	RETURN	–	–	REC.	CEILING/SIDEWALL	YES	ST	WHITE	TITUS/350 RL	25	<=400
TG	TRANSFER	–	–	REC.	SIDEWALL	NO	ST	WHITE	TITUS/350 RL	25	<=400
EG-1	EXHAUST	–	–	REC.	CEILING/SIDEWALL	NO	ST	WHITE	TITUS/350 RL	25	<=500
EG-2	EXHAUST	–	–	REC.	DUCT MOUNTED	NO	ST	WHITE	TITUS/350 RL	25	<=450

NOTES:
1. COORDINATE MOUNTING REQUIREMENTS WITH ARCHITECTURAL REFLECTED CEILING PLANS.
2. COORDINATE FINISH & COLOR WITH ARCHITECT.
3. PROVIDE FRAME SUITABLE FOR SURFACE MOUNTING, CEILING OR SIDEWALL.
4. PROVIDE SQUARE TO ROUND TRANSITIONS WHERE NEEDED.
5. REFER TO DRAWINGS FOR NECK SIZES AND CFM UNLESS NOTED ABOVE.
6. PROVIDE OPPOSED BLADE DAMPERS.
7. PROVIDE ALL SUPPLY AND RETURN REGISTERS (SR AND RR) WITH OPPOSED BLADE DAMPERS.
8. PROVIDE RADIATION DAMPERS WHERE THERE IS A FLOOR/CEILING ASSEMBLY.

GAS FIRED FURNACE SCHEDULE

TAG No.	LOCATION SERVED	MANUFACTURER (AS STANDARD)	MODEL No. (AS STANDARD)	TOTAL CFM	MIN OA CFM	SUPPLY FAN DATA CFM	ESP	HP	DX COOLING COIL DATA EAT DB(°F)	EAT WB(°F)	TC(MBH)	GAS HEATING DATA EAT (°F)	LAT (°F)	MBH IN	MBH OUT	ELECTRICAL DATA VOLTS	PHASE	HTZ	AMPS	MOCP	SEER	AFUE	REMARKS
GF-A	UNIT TYPE A, LEVELS 1-4	YORK	TG9S060B12MP11/MC43	1200	100	1200	0.5	1/2	79	66	35	66	90	60	57	115	1	60	10.0	15	13.0	95.5	PROVIDE PROGRAMMABLE THERMOSTAT, CONCENTRIC VENT KIT, FILTER RACK AND FILTER ACCESS DOOR, COIL ENCLOSURE
GF-B	UNIT TYPE B, LEVELS 1-4	YORK	TG9S060B12MP11/MC43	1200	100	1200	0.5	1/2	78	65	42	68	90	60	57	115	1	60	10.0	15	13.0	95.5	PROVIDE PROGRAMMABLE THERMOSTAT, CONCENTRIC VENT KIT, FILTER RACK AND FILTER ACCESS DOOR, COIL ENCLOSURE
GF-C	UNIT TYPE C, LEVELS 1-4	YORK	TG9S060B12MP11/MC43	1200	100	1200	0.5	1/2	78	65	29	68	90	60	57	115	1	60	10.0	15	13.0	95.5	PROVIDE PROGRAMMABLE THERMOSTAT, CONCENTRIC VENT KIT, FILTER RACK AND FILTER ACCESS DOOR, COIL ENCLOSURE
GF-D	UNIT TYPE D, LEVELS 1-4	YORK	TG9S060B12MP11/MC43	1200	100	1200	0.5	1/2	78	65	35	68	90	60	57	115	1	60	10.0	15	13.0	95.5	PROVIDE PROGRAMMABLE THERMOSTAT, CONCENTRIC VENT KIT, FILTER RACK AND FILTER ACCESS DOOR, COIL ENCLOSURE
GF-E	UNIT TYPE E, LEVELS 1-4	YORK	TG9S080C16MP11/MC43	1600	100	1600	0.5	3/4	78	65	42	69	90	80	76	115	1	60	11.5	15	13.0	95.5	PROVIDE PROGRAMMABLE THERMOSTAT, CONCENTRIC VENT KIT, FILTER RACK AND FILTER ACCESS DOOR, COIL ENCLOSURE
GF-F	UNIT TYPE A, PENTHOUSE/MEZZ	YORK	TG9S100C16MP11/MC48	1600	150	1600	0.5	3/4	79	66	48	66	90	100	95	115	1	60	11.5	15	13.0	95.5	PROVIDE PROGRAMMABLE THERMOSTAT, CONCENTRIC VENT KIT, FILTER RACK AND FILTER ACCESS DOOR, COIL ENCLOSURE
GF-G	UNIT TYPE B, PENTHOUSE/MEZZ	YORK	TG9S100C16MP11/MC48	1600	150	1600	0.5	3/4	78	65	48	68	90	100	95	115	1	60	11.5	15	13.0	95.5	PROVIDE PROGRAMMABLE THERMOSTAT, CONCENTRIC VENT KIT, FILTER RACK AND FILTER ACCESS DOOR, COIL ENCLOSURE
GF-H	UNIT TYPE C, PENTHOUSE/MEZZ	YORK	TG9S080C16MP11/MC48	1600	150	1600	0.5	3/4	78	65	48	69	90	80	76	115	1	60	11.5	15	13.0	95.5	PROVIDE PROGRAMMABLE THERMOSTAT, CONCENTRIC VENT KIT, FILTER RACK AND FILTER ACCESS DOOR, COIL ENCLOSURE
GF-J	UNIT TYPE D, PENTHOUSE/MEZZ	YORK	TG9S100C16MP11/MC48	1600	150	1600	0.5	3/4	78	65	48	68	90	100	95	115	1	60	11.5	15	13.0	95.5	PROVIDE PROGRAMMABLE THERMOSTAT, CONCENTRIC VENT KIT, FILTER RACK AND FILTER ACCESS DOOR, COIL ENCLOSURE
GF-K	UNIT TYPE E, PENTHOUSE/MEZZ	YORK	TG9S100C16MP11/MC48	1600	150	1600	0.5	3/4	78	65	48	68	90	100	95	115	1	60	11.5	15	13.0	95.5	PROVIDE PROGRAMMABLE THERMOSTAT, CONCENTRIC VENT KIT, FILTER RACK AND FILTER ACCESS DOOR, COIL ENCLOSURE
GF-L	GRAND LOBBY/ PUBLIC CORRIDOR	YORK	TG9S060B12MP11/MC43	1200	180	1200	0.5	1/2	80	67	35	53	90	60	57	115	1	60	10.0	15	13.0	95.5	PROVIDE PROGRAMMABLE THERMOSTAT, CONCENTRIC VENT KIT, FILTER RACK AND FILTER ACCESS DOOR, COIL ENCLOSURE
GF-M	FIRST FLOOR CONFERENCE ROOM	YORK	TG9S080C16MP11/MC48	1600	N/A	1600	0.5	3/4	80	67	42	54	90	80	76	115	1	60	11.5	15	13.0	95.5	PROVIDE PROGRAMMABLE THERMOSTAT, CONCENTRIC VENT KIT, FILTER RACK AND FILTER ACCESS DOOR, COIL ENCLOSURE

NOTES:
1. PROVIDE LITTLE GIANT CONDENSATE PUMP (CP-1); MODEL VCC-20ULS, 120/1/60 AND ACID NEUTRALIZER.
2. COOLING COIL AND PAIRED CONDENSING UNIT COMBINATION SHALL MEET MINIMUM SEER RATING OF 16.0
3. PROVIDE VOLUME DAMPERS AS REQUIRED TO RETURN AND OUTDOOR AIR TO MEET MINIMUM OUTDOOR AIR REQUIREMENTS.

AIR COOLED CONDENSING UNIT SCHEDULE

TAG No.	LOCATION(S) SERVED	MANUFACTURER	MODEL #	TYPE	COOLING DATA MBH	EAT(°F)	SST(°F)	SCT(°F)	CFM	ELECTRICAL DATA VOLTS	PHASE	MCA	MOCP	Cond. Fan No. – HP	Comp. Mtr No. – RLA	OPERATING WEIGHT	REMARKS
ACCU-A	GF-A	YORK	YCJD42S41S2	AIR COOLED	42	–	--	--	3050	208	1	21.5	35	1 / 0.25	1 / 16	164	PROVIDE WITH DISCONNECT AND VIBRATION ISOLATORS
ACCU-B	GF-B	YORK	YCJD36S41S1	AIR COOLED	35	–	--	--	3200	208	1	17.9	30	1 / 0.25	1 / 13.1	145	PROVIDE WITH DISCONNECT AND VIBRATION ISOLATORS
ACCU-C	GF-C	YORK	YCJD30S41S1	AIR COOLED	29	–	--	--	2050	208	1	14.7	25	1 / 0.25	1 / 10.6	131	PROVIDE WITH DISCONNECT AND VIBRATION ISOLATORS
ACCU-D	GF-D	YORK	YCJD42S41S2	AIR COOLED	42	–	--	--	3050	208	1	21.5	35	1 / 0.25	1 / 16	164	PROVIDE WITH DISCONNECT AND VIBRATION ISOLATORS
ACCU-E	GF-E	YORK	YCJD36S41S1	AIR COOLED	35	–	--	--	3200	208	1	17.9	30	1 / 0.25	1 / 13.1	145	PROVIDE WITH DISCONNECT AND VIBRATION ISOLATORS
ACCU-F	GF-F	YORK	YCJD48S41S1	AIR COOLED	48	–	--	--	2950	208	1	21.1	35	1 / 0.25	1 / 15.7	173	PROVIDE WITH DISCONNECT AND VIBRATION ISOLATORS
ACCU-G	GF-G	YORK	YCJD48S41S1	AIR COOLED	48	–	--	--	2950	208	1	21.1	35	1 / 0.25	1 / 15.7	173	PROVIDE WITH DISCONNECT AND VIBRATION ISOLATORS
ACCU-H	GF-H	YORK	YCJD48S41S1	AIR COOLED	48	–	--	--	2950	208	1	21.1	35	1 / 0.25	1 / 15.7	173	PROVIDE WITH DISCONNECT AND VIBRATION ISOLATORS
ACCU-J	GF-J	YORK	YCJD48S41S1	AIR COOLED	48	–	--	--	2950	208	1	21.1	35	1 / 0.25	1 / 15.7	173	PROVIDE WITH DISCONNECT AND VIBRATION ISOLATORS
ACCU-K	GF-K	YORK	YCJD48S41S1	AIR COOLED	48	–	--	--	2950	208	1	21.1	35	1 / 0.25	1 / 15.7	173	PROVIDE WITH DISCONNECT AND VIBRATION ISOLATORS
ACCU-L	GF-L	YORK	YCJD36S41S1	AIR COOLED	35	–	--	--	3200	208	1	17.9	30	1 / 0.25	1 / 13.1	145	PROVIDE WITH DISCONNECT AND VIBRATION ISOLATORS
ACCU-M	GF-M	YORK	YCJD42S41S2	AIR COOLED	42	–	--	--	3050	208	1	21.5	35	1 / 0.25	1 / 16	164	PROVIDE WITH DISCONNECT AND VIBRATION ISOLATORS
ACCU-N	FCU-A	YORK	YCJD36S41S1	AIR COOLED	35	–	--	--	3200	208	1	17.9	30	1 / 0.25	1 / 13.1	145	PROVIDE WITH DISCONNECT AND VIBRATION ISOLATORS

ENERGY RECOVERY VENTILATION SCHEDULE

TAG No.	LOCATION(S) SERVED	MANUFACTURER (AS STANDARD)	MODEL No. (AS STANDARD)	SUPPLY FAN DATA CFM (OA)	ESP (IN W.C.)	EXHAUST FAN DATA CFM (EA)	ESP (IN W.C.)	MOTOR DATA No.	RPM	WATTS	TYPE	HEAT RECOVERY SECTION – WINTER PERFORMANCE – SUPPLY AIR CFM	EAT DB(F)	LAT DB(F)	EXHAUST AIR CFM	EAT DB(F)	MBH RCVD	SUPPLY AIR CFM	EAT DB(F)	EAT WB(F)	LAT DB(F)	LAT WB(F)	EXHAUST AIR CFM	EAT DB(F)	EAT WB(F)	MBH RCVD	FILTERS/ TYPE	ELECTRICAL DATA VOLTS	PHASE	HZ	MCA	FLA	WEIGHT (LBS)	REMARKS
ERV-A	UNIT TYPES A-E, LEVELS 1-4	RENEWAIRE	EV130	100	0.5"	100	0.5"	1	–	102	CORE	50-140	0	–	50-140	70	–	50-140	83	73	–	–	50-140	78	50	–	MERV 8	120	1	60	–	1.2	49	PROVIDE WITH DISCONNECT, WALL CAPS, BACK DRAFT DAMPERS, CONTROLLER, HANGING BRACKETS AND INTEGRAL FLANGE.
ERV-B	UNIT TYPES A-E, LEVEL 5M	RENEWAIRE	EV200	150	0.5"	150	0.5"	1	–	157	CORE	100-200	0	–	100-200	70	–	100-200	83	73	–	–	100-200	78	50	–	MERV 8	120	1	60	–	1.5	70	PROVIDE WITH DISCONNECT, WALL CAPS, BACK DRAFT DAMPERS, CONTROLLER, HANGING BRACKETS AND INTEGRAL FLANGE.

NOTES:
1. PROVIDE RADIATION DAMPERS WHERE THERE IS A FLOOR/CEILING ASSEMBLY.

PUMP SCHEDULE

TAG No.	LOCATION(S) SERVED	MANUFACTURER (AS STANDARD)	MODEL No. (AS STANDARD)	TYPE	FLOW RATE GPM	PUMP HEAD FT	MOTOR RPM	ELECTRICAL DATA VOLTS	PHASE	HP	REMARKS
BP-1	B-1	TACO	1935	INLINE	66	30	1750	240	3	1.17	PROVIDE STARTER
BP-2	B-2	TACO	1935	INLINE	66	30	1750	240	3	1.17	PROVIDE STARTER
BCP-1	HOT WATER SYSTEM	TACO	1915	INLINE	66	100	3500	240	3	4.94	PROVIDE VFD

LOUVER SCHEDULE

TAG No.	MANUFACTURER (AS STANDARD)	MODEL #	TYPE	SERVES	QUANTITY	AIRFLOW CFM	MAX VELOCITY FPM	HEIGHT IN	WIDTH IN	DEPTH IN	REMARKS
LU-A	GREENHECK	EDJ-401	DRAINABLE BLADE / INTAKE	PARKING GARAGE	8	–	–	20	67.5	–	PROVIDE BIRD AND INSECT SCREEN
LU-B	GREENHECK	EDJ-401	DRAINABLE BLADE / EXHAUST	TREF-1, GEF-1	1	–	–	18	60	–	PROVIDE BIRD AND INSECT SCREEN
LU-C	GREENHECK	EDJ-401	DRAINABLE BLADE / EXHAUST	GEF-2A, GEF-2B	1	–	–	14	198	–	PROVIDE BIRD AND INSECT SCREEN
LU-D	GREENHECK	EDJ-401	DRAINABLE BLADE / EXHAUST	GEF-3A, GEF-3B, TREF-2	1	–	–	24	84	–	PROVIDE BIRD AND INSECT SCREEN

NOTES:
1. CONTRACTOR SHALL VERIFY ALL LOUVER DIMENSIONS BEFORE ORDERING LOUVERS.
2. PROVIDE WITH FULL SIZE PLENUM. REFER TO DRAWINGS FOR DEPTH.

FAN SCHEDULE

TAG No.	LOCATION(S) SERVED	MANUFACTURER (AS STANDARD)	MODEL No. (AS STANDARD)	TYPE	FAN DATA CFM	RPM	SP(IN)	ELECTRICAL DATA VOLTS	PHASE	HP	REMARKS
EF-A	BATHROOM	PANISONIC	FV-05-11VKS1	CEILING	100	895	0.1	120	1	8.0 W	PROVIDE WITH DISCONNECT, MULTI-SPEED WITH TIME DELAY, RADIATION DAMPERS,
EEF-A	ELECTRIC ROOM	GREENHECK	SQ-80-VG	INLINE	150	1493	0.5	208	1	1/6	PROVIDE VFD, DISCONNECT SWITCH, SPRING ISOLATION HANGERS, MOUNT MOTOR ON SIDE, REVERSE ACTING T-STAT
DEF-A	DRYER BOOSTER	FANTECH	DBE110	INLINE	100	2900	0.8	120	1	80 W	PROVIDE WITH DB10 SWITCH, DBLT4W SECONDARY DRYER LINT TRAP, FC FAST CLAMPS, DISCONNECT & MOUNTING BRACKET
GEF-1	GARAGE	GREENHECK	SQ-160HP-VG	INLINE	2500	1478	0.5	208	1	1	PROVIDE VFD, DISCONNECT SWITCH, SPRING ISOLATION HANGERS, MOUNT MOTOR ON SIDE,
GEF-2A	GARAGE	GREENHECK	BCF-210	INLINE	3500	1035	0.5	208	3	1-1/2	PROVIDE VFD, DISCONNECT SWITCH, SPRING ISOLATION HANGERS, MOUNT MOTOR ON SIDE,
GEF-2B	GARAGE	GREENHECK	BCF-210	INLINE	3500	1035	0.5	208	3	1-1/2	PROVIDE VFD, DISCONNECT SWITCH, SPRING ISOLATION HANGERS, MOUNT MOTOR ON SIDE,
GEF-3A	GARAGE	GREENHECK	SQ-160HP-VG	INLINE	2500	1478	0.5	208	1	1	PROVIDE VFD, DISCONNECT SWITCH, SPRING ISOLATION HANGERS, MOUNT MOTOR ON SIDE,
GEF-3B	GARAGE	GREENHECK	SQ-160HP-VG	INLINE	2500	1478	0.5	208	1	1	PROVIDE VFD, DISCONNECT SWITCH, SPRING ISOLATION HANGERS, MOUNT MOTOR ON SIDE,
TREF-1	DUMPSTER ROOM	GREENHECK	SQ-99-VG	INLINE	500	1430	0.5	208	1	1/4	PROVIDE VFD, DISCONNECT SWITCH, SPRING ISOLATION HANGERS, MOUNT MOTOR ON SIDE,
TREF-2	DUMPSTER ROOM	GREENHECK	SQ-99-VG	INLINE	500	1430	0.5	208	1	1/4	PROVIDE VFD, DISCONNECT SWITCH, SPRING ISOLATION HANGERS, MOUNT MOTOR ON SIDE,

INSULATION SCHEDULE

LOCATION	INSULATION TYPE	FITTING INSULATION TYPE	FOR PIPE DIA. (INCHES) RUNOUTS	_< 1 1/2"	2"-2 1/2"	3"-6"
			INSULATION WALL THICKNESS (INCHES)			
HEATING HOT WATER PIPING HWS & HWR	FIBERGLASS WITH ALL SERVICE PVC JACKET	ZESTON	1 1/2"	1 1/2"	2"	2"
REFRIGERANT PIPING	ELASTOMERIC	ZESTON	1/2"	1/2"	1"	1"
SUPPLY, RETURN & OUTSIDE AIR DUCT/LOUVER INSULATION	2" FIBERGLASS DUCT WRAP WITH FSK FACING	UNCONDITIONED SPACE – R-8 MIN; CONDITIONED SPACE – R-5 MIN				
EXHAUST DUCT INSULATION	NONE					
SUPPLY, RETURN, & COMBUSTION AIR DUCTWORK INSULATION	FIBERGLASS UNCONDITION SPACE	3" THICK 3/4 DENSITY WITH FSK FOIL FACE/R8				

JD LaGrasse
Architects - Engineers - Interiors - Land Planning
One Elm Square, Andover, MA 01810
T. 978-470-3675 F. 978-470-3670
www.lagrassearchitects.com – E-mail: JDLA@AOL.COM

BLW Engineers, Inc.
311 Great Road, Post Office Box 1551
Littleton, Massachusetts 01460
t: 978.486.4301 f: 978.486.0067
www.blwengineers.com
HVAC • Electrical • Plumbing • Fire Protection

STRUCTURAL ENGINEER: VEITAS & VEITAS ENGINEERS
CIVIL ENGINEER: MERIDIAN ASSOCIATES INC.
MEP: BLW ENGINEERS INC.

HATTERS POINT

AMESBURY, MA

prepared for: HATTERS POINT CAPITAL LLC.
location: PO BOX 1044 SUDBURY, MA 01776
title: HVAC SCHEDULES

JDLAI 2015 ©
ALL PLANS, SPECIFICATIONS AND IDEAS ARE THE PROPERTY OF JDLAI. RIGHTS OF USE ARE CONDITIONAL AND ARE GRANTED UNDER FULL COMPENSATION AND LIMITED TO A ONE-TIME USE TO CONSTRUCT A SINGLE PROJECT ON THE SITE SO INDICATED. USE OF THE WORK AND ANY DERIVATIVE WORK COVERED UNDER THIS COPYRIGHT FOR OTHER PROJECTS IS PROHIBITED. THE USE OR REPRODUCTION OF THESE PLANS FOR ANY OTHER CONSTRUCTION OR PERMIT APPLICATION IS STRICTLY PROHIBITED WITHOUT PRIOR WRITTEN PERMISSION OF JDLAI.

Mark	Date
–	Revision #5 – 01.15.16
2	ICC Review Comments
–	Permit Set
–	CD Pricing Set
–	Construction Docs Progress
–	Design Development Set

Revisions

Date: 11.15.2015
Scale: AS NOTED
Job No.: 2394
Sheet No.: H0.02

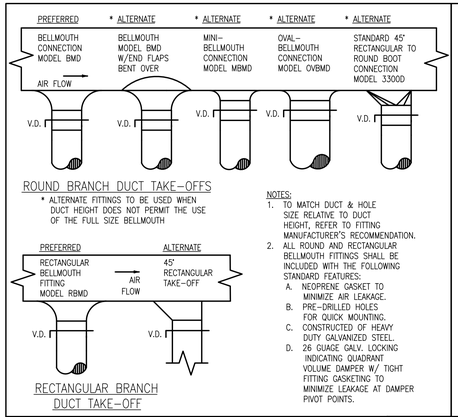

NOTES:
1. TO MATCH DUCT & HOLE SIZE RELATIVE TO DUCT HEIGHT, REFER TO FITTING MANUFACTURER'S RECOMMENDATION.
2. ALL ROUND AND RECTANGULAR BELLMOUTH FITTINGS SHALL BE INCLUDED WITH THE FOLLOWING STANDARD FEATURES:
   A. NEOPRENE GASKET TO MINIMIZE AIR LEAKAGE.
   B. PRE-DRILLED HOLES FOR QUICK MOUNTING.
   C. CONSTRUCTED OF HEAVY DUTY GALVANIZED STEEL.
   D. 26 GUAGE GALV. LOCKING INDICATING QUADRANT VOLUME DAMPER W/ TIGHT FITTING GASKETING TO MINIMIZE LEAKAGE AT DAMPER PIVOT POINTS.

BRANCH TAKE-OFFS — NO SCALE

NOTES:
1. FASTEN INSULATED FLEX DUCT TO METAL DUCT AND PLENUM WITH 22 GAUGE CLAMP AND 4 SHEET METAL SCREWS AND SEAL.
2. MAXIMUM LENGTH OF FLEX DUCT "L"=5'-0"

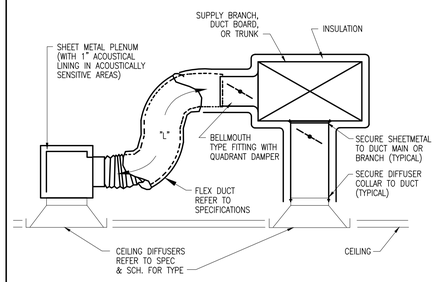

INSTALLATION AT CEILING DIFFUSERS — NO SCALE

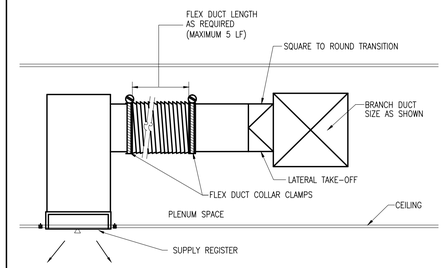

SUPPLY REGISTER DETAIL — NO SCALE

NOTES:
1. FASTEN FLEX DUCT TO METAL DUCT WITH ADHESIVE & DRAW BANDS.
2. MAXIMUM LENGTH OF "L"=5'-0"

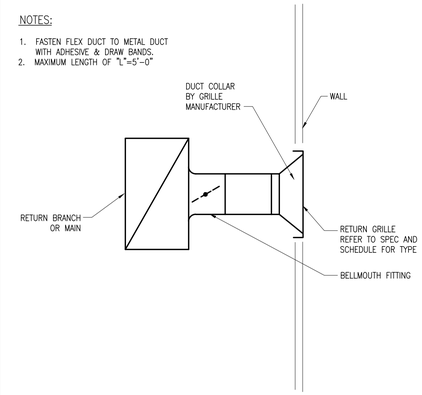

INSTALLATION AT RETURN GRILLES — NO SCALE

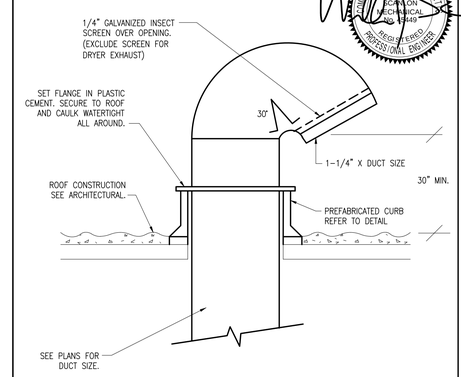

GOOSENECK DETAIL — NO SCALE

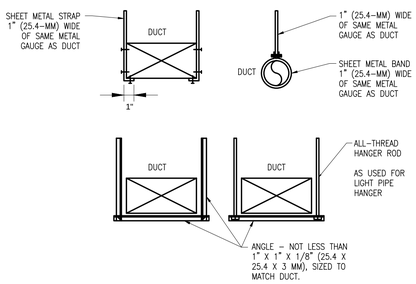

SHEET-METAL DUCT HANGERS — NO SCALE

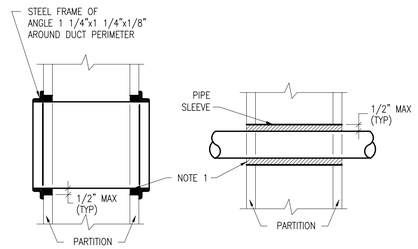

NOTES:
1. AT FIRE RATED PARTITIONS, ADD ADDITIONAL LAYER OF FIRE SAFING INSULATION AROUND PENETRATION SO AS TO FILL CAVITY.
2. DUCT AND PIPE PENETRATIONS THRU CORRIDOR WALLS ABOVE THE CEILING ARE TO BE FIRE STOPPED AROUND THE PENETRATION.
3. DUCT PENETRATION SHOWN IS WHERE FIRE DAMPER IS NOT REQUIRED BY CODE.

DUCT AND PIPE PENETRATION — NO SCALE

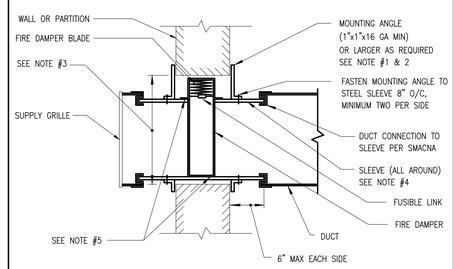

NOTES:
1. DO NOT FASTEN MOUNTING ANGLES TO WALL OR PARTITION.
2. MOUNTING ANGLES SHALL OVERLAP THE WALL/PARTITION A MINIMUM OF ONE INCH ALL AROUND AND AT CORNERS.
3. WALL/PARTITION OPENING SHALL BE MADE TO PROVIDE 1/8" CLEARANCE PER FOOT OF SLEEVE HEIGHT OR WIDTH.
4. STEEL SLEEVE GAGE: FOR ROUND DUCTS UP TO 24" DIA. AND RECTANGULAR DUCTS UP TO 24" HIGH AND 36" WIDE; 16 GAGE ALL OTHERS; 14 GAGE.
5. FASTEN FIRE DAMPER TO STEEL SLEEVE 8" O/C, MINIMUM TWO PER SIDE.
6. VERTICAL POSITION DAMPER IS SHOWN. DETAIL FOR HORIZONTAL POSITION IS SIMILAR.

FIRE DAMPER DETAIL — NO SCALE

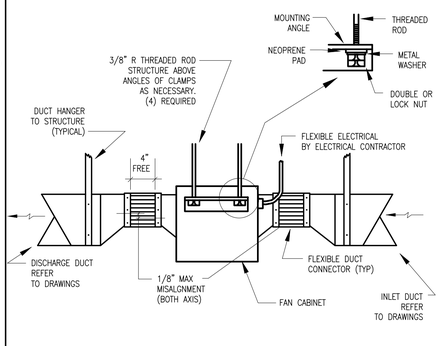

INLINE CEILING EXHAUSTER — NO SCALE

NOTE:
THE AUXILIARY DRAIN PAN SHALL HAVE A MINIMUM DEPTH OF 1-1/2", SHALL NOT BE LESS THAN 3 " LARGER THAN THE UNIT OR THE COIL DIMENSIONS IN WIDTH AND LENGTH AND SHALL BE CONSTRUCTED OF CORROSION-RESISTANT MATERIAL

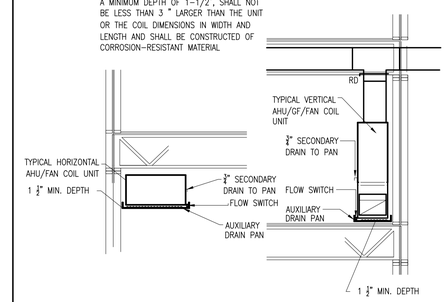

AUX. DRAIN PAN & FLOW SWITCH FOR HVAC UNITS — NO SCALE

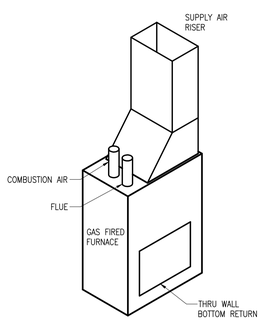

GAS FURNACE DETAIL — NO SCALE

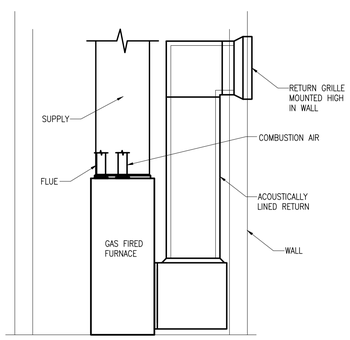

GAS FURNACE RETURN AIR DETAIL — NO SCALE

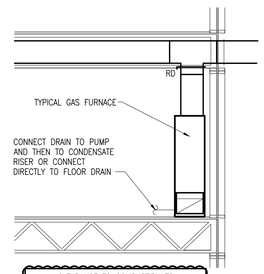

CLEARANCE TO COMBUSTIBULES					
FRONT	BACK	LEFT	RIGHT	TOP	FLUE
3"	0"	0"	0"	1"	0"

GAS FURNACE DRAIN CONNECTION DETAIL — NO SCALE

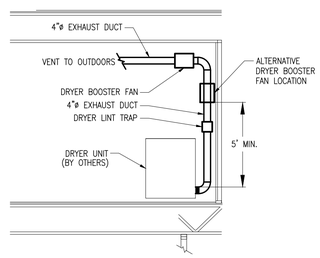

DRYER EXHAUST CONNECTION DETAIL — NO SCALE

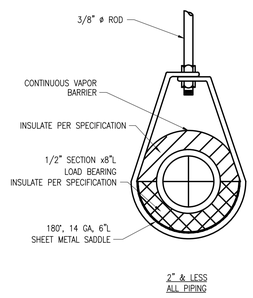

2" or LESS PIPE HANGER DETAIL — NO SCALE

JD LaGrasse
Architects - Engineers - Interiors - Land Planning
One Elm Square, Andover, MA 01810
T. 978-470-3675 F. 978-470-3670
www.lagrassearchitects.com - E-mail: JDLA@AOL.COM

BLW
BLW Engineers, Inc.
311 Great Road, Post Office Box 1551
Littleton, Massachusetts 01460
t: 978.486.4303 f: 978.428.0067
www.blwengineers.com
HVAC • Electrical • Plumbing • Fire Protection

STRUCTURAL ENGINEER: VEITAS & VEITAS ENGINEERS
CIVIL ENGINEER: MERIDIAN ASSOCIATES INC.
MEP: BLW ENGINEERS INC.

HATTERS POINT

AMESBURY, MA

prepared for: HATTERS POINT CAPITAL LLC.
location: PO BOX 1044 SUDBURY, MA 01776
title: HVAC DETAILS

JDLA| 2015 ©
ALL PLANS, SPECIFICATIONS AND IDEAS ARE THE PROPERTY OF JDLA. RIGHTS OF USE ARE CONDITIONAL AND ARE GRANTED UNDER FULL COMPENSATION AND LIMITED TO A ONE-TIME USE TO CONSTRUCT A SINGLE PROJECT ON THE SITE SO INDICATED. USE OF THE WORK AND ANY DERIVATIVE WORK COVERED UNDER THIS COPYRIGHT FOR OTHER PROJECTS IS PROHIBITED. THE USE OR REPRODUCTION OF THESE PLANS FOR ANY OTHER CONSTRUCTION OR PERMIT APPLICATION IS STRICTLY PROHIBITED WITHOUT PRIOR WRITTEN PERMISSION OF JDLA.

Mark	Date
–	Revision #5 – 01.15.16
2	ICC Review Comments
–	Permit Set
–	CD Pricing Set
–	Construction Docs Progress
–	Design Development Set

Revisions

Date 11.15.2015
Scale AS NOTED
Job No. 2394
Sheet No. H0.03

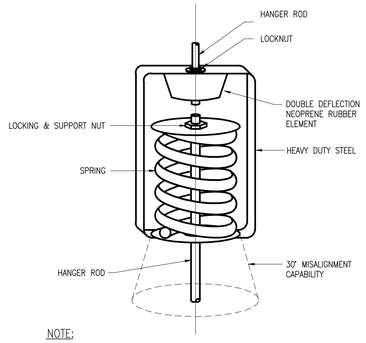

NOTE:
1. ALL AIR HANDLING EQUIPMENT SUSPENDED FROM STRUCTURES AND ALL STEAM AND CHILLED WATER PIPING IN MECHANICAL ROOMS SHALL BE HUNG WITH VIBRATION ISOLATORS.
2. HANGER SIZE SHALL BE AS PER MANUFACTURER'S RECOMMENDATION AND ACCORDING TO THE LOAD OF THE EQUIPMENT.

VIBRATION ISOLATION HANGER — NO SCALE

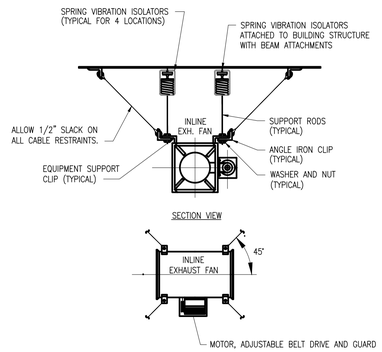

RESTRAINTS FOR HVAC SUSPENDED EQUIPEMENT — NO SCALE

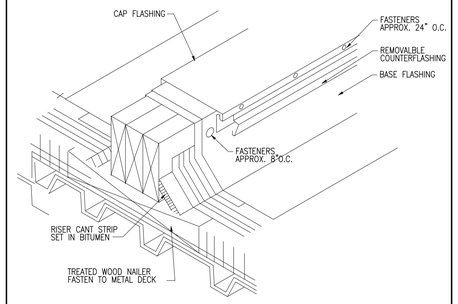

EQUIPMENT SUPPORT DETAIL — NO SCALE

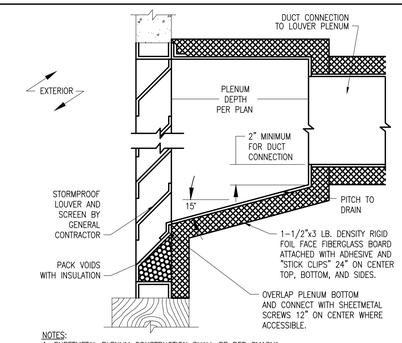

NOTES:
1. SHEETMETAL PLENUM CONSTRUCTION SHALL BE PER SMACNA.
2. SUPPORT PLENUM FROM FLOOR OR STRUCTURE ABOVE WITH GALVANIZED STEEL ANGLES AND CHANNELS, CROSS BREAK ALL PANELS FOR RIGIDITY.
3. LOUVER SHALL BE INSTALLED A MINIMUM OF 3 FEET ABOVE SNOW ACCUMULATING SURFACE (ROOF, WALKWAY, ETC.).
4. BARE SHEETMETAL PAINTED BY HVAC SUBCONTRACTOR (BLACK OR AS DIRECTED BY ARCHITECT)

PLENUM AT LOUVER DETAIL — NO SCALE

NOTES:
1. ALLOW SUFFICIENT SPACE BELOW DRAIN PAN FOR PIPE TRAP.
2. PITCH DRAIN FOR PROPER RUNOFF.
3. MANUALLY PRIME FILL TRAP BEFORE START-UP TO PROVIDE INITIAL DRAIN SEAL.
4. SUPPORT LENGTHY DRAIN LINES TO PREVENT SAG AND CONDENSATE OVERFLOW.
   (a) THIS DIMENSION IN INCHES MUST BE GREATER THAN THE MAXIMUM FAN SUCTION STATIC PRESSURE IN INCHES WC (WITH DIRTY FILTERS, COILS, AND MAXIMUM AIR FLOW).
   (b) THIS DIMENSION IN INCHES MUST BE GREATER THAN 1/2 OF THE SAME MAXIMUM FAN SUCTION STATIC PRESSURE IN INCHES WC.
   (c) 1" WATER SEAL.

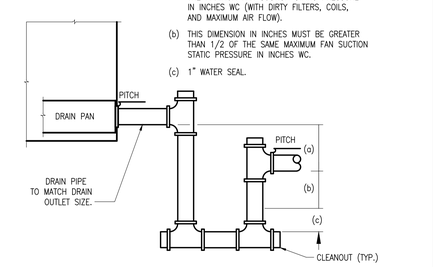

DRAW THROUGH UNIT CONDENSATE TRAP — NO SCALE

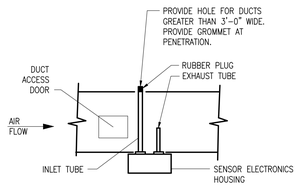

FOR DUCTS 36" TO 95"

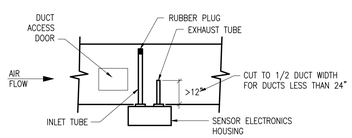

FOR DUCTS 8" TO 35"

NOTES:
1. HOLE IN INLET TUBE TO FACE AIR STREAM.
2. MOUNT HOUSING IN VERTICAL OR HORIZONTAL PLANE (WITH RESPECT TO ELEVATION).
3. ANGULAR MOUNTING NOT PERMITTED.
4. TUBES TO RUN PARALLEL TO FLOOR.

DUCT SMOKE DETECTOR INSTALLATION — NO SCALE

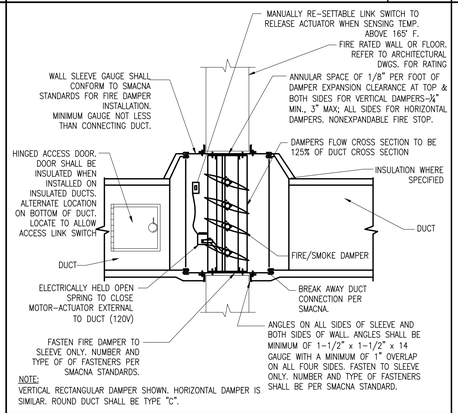

NOTE:
VERTICAL RECTANGULAR DAMPER SHOWN. HORIZONTAL DAMPER IS SIMILAR. ROUND DUCT SHALL BE TYPE "C".

COMBINATION FIRE/SMOKE DAMPER DETAIL — NO SCALE

NOTES:
1. FASTEN INSULATED FLEX DUCT TO METAL DUCT AND PLENUM WITH 22 GAUGE CLAMP AND 4 SHEET METAL SCREWS AND SEAL.
2. MAXIMUM LENGTH OF FLEX DUCT "L"=5'-0"

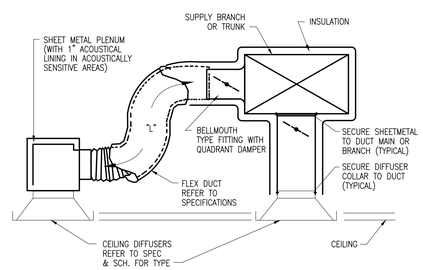

INSTALLATION AT CEILING DIFFUSERS — NO SCALE

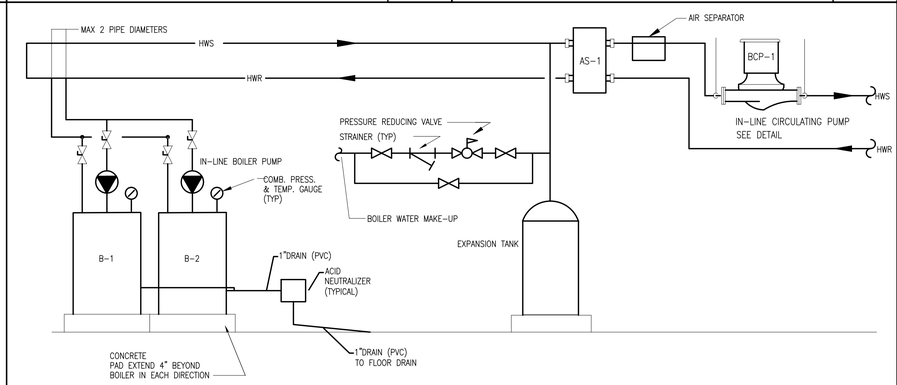

NEW BOILER PIPING SCHEMATIC — NO SCALE

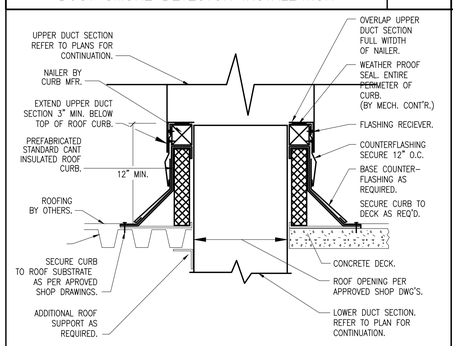

NOTES:
1. DETAIL SHOWS BOTH CONCRETE AND METAL DECK ROOF APPLICATIONS. REFER TO ARCHITECTURAL DRAWINGS FOR ACTUAL ROOF CONSTRUCTION.
2. ROOF CURB PROVIDED BY MECHANICAL CONTRACTOR INSTALLED BY ROOFING CONTRACTOR.
3. ROOF CURB TO BE INSTALLED AS RECOMMENDED BY ROOFING MFR.

DUCT ROOF PENETRATION — NO SCALE

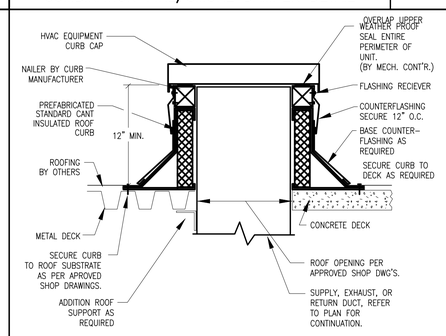

NOTES:
1. DETAIL SHOWS BOTH CONCRETE AND METAL DECK ROOF APPLICATIONS. REFER TO ARCHITECTURAL DRAWINGS FOR ACTUAL ROOF CONSTRUCTION.
2. ROOF CURB PROVIDED BY MECHANICAL CONTRACTOR INSTALLED BY ROOFING CONTRACTOR.
3. ROOF CURB TO BE INSTALLED AS RECOMMENDED BY ROOFING MFR.

STANDARD ROOF CURB — NO SCALE

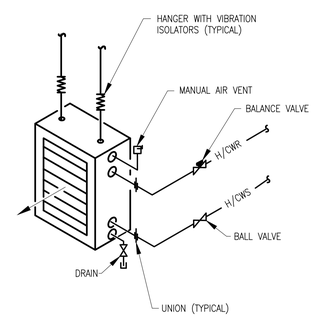

HORIZONTAL UNIT HEATER DETAIL — NO SCALE

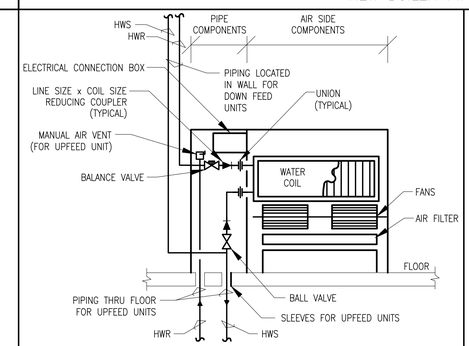

NOTES
1. FLOOR UNIT INDICATED, WALL UNIT SIMILAR WITH BOTTOM OF UNIT 4" ABOVE FINISHED FLOOR. (EXCEPT AS NOTED)
2. FASTEN TO WALL AT MOUNTING LUGS.
3. LEFT HAND UNIT SHOWN. RIGHT HAND UNIT OPPOSITE FEED. REFER TO PLANS.

CABINET UNIT HEATER DETAIL — NO SCALE

NOTE:
1. POSITION PIPE HANGERS TO BEAR FULL WEIGHT OF PIPING. NO LOAD ON COIL BODY.
2. LOCATE UNIONS AND ARRANGE PIPING TO FACILITATE COIL REMOVAL AND TO AVOID BLOCKING ACCESS DOORS FOR SERVICING OF FILTERS, VALVES, MOTORS, ETC...
3. CONTROL VALVE TO FAIL OPEN.

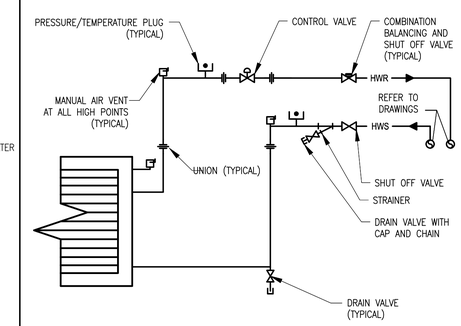

PIPING AT REHEAT COIL WITH 2-WAY VALVE DETAIL — NO SCALE

JD LaGrasse
Architects - Engineers - Interiors - Land Planning
One Elm Square, Andover, MA 01810
T. 978-470-3675 F. 978-470-3670
www.lagrassearchitects.com - E-mail: JDLA@AOL.COM

BLW Engineers, Inc.
311 Great Road, Post Office Box 1551
Littleton, Massachusetts 01460
t: 978.486.4303 f: 978.428.0067
www.blwengineers.com
HVAC • Electrical • Plumbing • Fire Protection

STRUCTURAL ENGINEER: VEITAS & VEITAS ENGINEERS
CIVIL ENGINEER: MERIDIAN ASSOCIATES INC.
MEP: BLW ENGINEERS INC.

HATTERS POINT

AMESBURY, MA

prepared for: HATTERS POINT CAPITAL LLC.
location: PO BOX 1044 SUDBURY, MA 01776
title: HVAC DETAILS

JDLA| 2015 ©
ALL PLANS, SPECIFICATIONS AND IDEAS ARE THE PROPERTY OF JDLA. RIGHTS OF USE ARE CONDITIONAL AND ARE GRANTED UNDER FULL COMPENSATION AND LIMITED TO A ONE-TIME USE TO CONSTRUCT A SINGLE PROJECT ON THE SITE SO INDICATED. USE OF THE WORK AND ANY DERIVATIVE WORK COVERED UNDER THIS COPYRIGHT FOR OTHER PROJECTS IS PROHIBITED. THE USE OR REPRODUCTION OF THESE PLANS FOR ANY OTHER CONDITIONAL OR PERMIT APPLICATION IS STRICTLY PROHIBITED WITHOUT PRIOR WRITTEN PERMISSION OF JDLA.

Mark	Date
–	Revision #5 – 01.15.16
2	ICC Review Comments
–	Permit Set
–	CD Pricing Set
–	Construction Docs Progress
–	Design Development Set

Revisions

Date: 11.15.2015
Scale: AS NOTED
Job No.: 2394
Sheet No.: H0.04

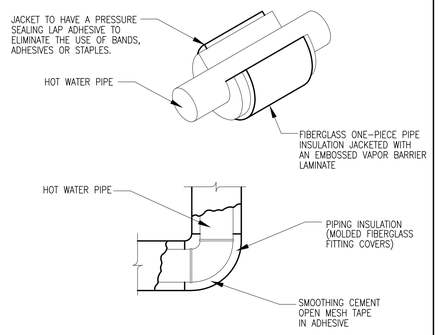

HOT WATER PIPING DETAIL — NO SCALE

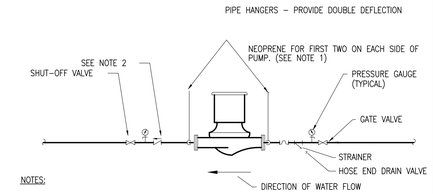

NOTES:

1. SUPPORT PUMP FROM PIPING ONLY. DO NOT SUPPORT PUMP FROM MOTOR ON VERTICAL OR HORIZONTAL IN-LINE PUMPS.
2. PROVIDE CHECK VALVE ONLY FOR PUMPS INSTALLED IN PARALLEL.

INLINE PUMP DETAIL — NO SCALE

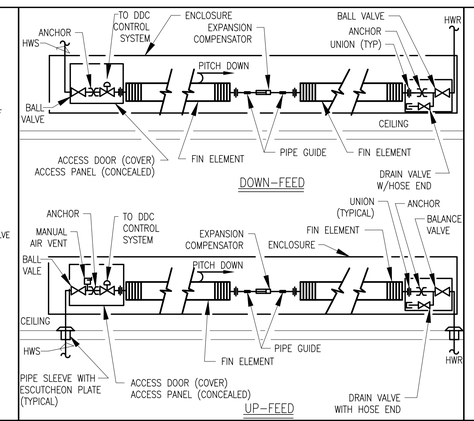

FIN TUBE RADIATION DETAIL — NO SCALE

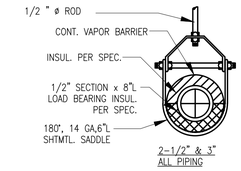

2-1/2" & 3" PIPE HANGER DETAIL — NO SCALE

COMMONWEALTH OF MASSACHUSETTS — WILLIAM E. CHAPMAN — MECHANICAL — NO. 16449 — REGISTERED PROFESSIONAL ENGINEER

JD LaGrasse
Architects - Engineers - Interiors - Land Planning
One Elm Square, Andover, MA 01810
T: 978-470-3675 F: 978-470-3670
www.lagrassearchitects.com - E-mail: JDLA@AOL.COM

BLW
BLW Engineers, Inc.
311 Great Road, Post Office Box 1551
Littleton, Massachusetts 01460
t: 978.486.4303 f: 978.428.0067
www.blwengineers.com
HVAC • Electrical • Plumbing • Fire Protection

STRUCTURAL ENGINEER: VEITAS & VEITAS ENGINEERS
CIVIL ENGINEER: MERIDIAN ASSOCIATES INC.
MEP: BLW ENGINEERS INC.

HATTERS POINT

AMESBURY, MA

prepared for: HATTERS POINT CAPITAL LLC.
location: PO BOX 1044 SUDBURY, MA 01776
title: HVAC DETAILS

JDLA| 2015 ©
ALL PLANS, SPECIFICATIONS AND IDEAS ARE THE PROPERTY OF JDLA. RIGHTS OF USE ARE CONDITIONAL AND ARE GRANTED UNDER FULL COMPENSATION AND LIMITED TO A ONE-TIME USE TO CONSTRUCT A SINGLE PROJECT ON THE SITE SO INDICATED. USE OF THE WORK AND ANY DERIVATIVE WORK COVERED UNDER THIS COPYRIGHT FOR OTHER PROJECTS IS PROHIBITED. THE USE OR REPRODUCTION OF THESE PLANS FOR ANY OTHER CONSTRUCTION OR PERMIT APPLICATION IS STRICTLY PROHIBITED WITHOUT PRIOR WRITTEN PERMISSION OF JDLA.

Mark	Date
–	Revision #5 – 01.15.16
2	ICC Review Comments
–	Permit Set
–	CD Pricing Set
–	Construction Docs Progress
–	Design Development Set

Revisions

Date 11.15.2015
Scale AS NOTED
Job No. 2394
Sheet No. H0.05

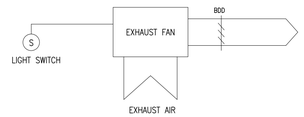

APPLICATION TABLE
EXHAUST FAN
EF-A

BATHROOM EXHAUST FAN SEQUENCE OF OPERATION

THE EXHAUST FAN SHALL OPERATE CONTINUOUSLY AND HAVE SPEED CONTROL INTERLOCKED WITH THE LIGHT SWITCH.

WITH THE SWITCH IN THE "ON" POSITION, THE FAN SHALL OPERATE AT THE HIGH SPEED SETTING.

WITH THE SWITCH IN THE "OFF" POSITION, THE FAN SHALL OPERATE AT THE LOW SPEED SETTING.

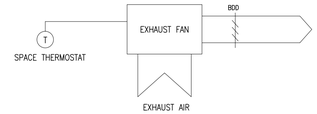

APPLICATION TABLE
EXHAUST FAN
EEF-A

ELECTRIC ROOM EXHAUST FAN SEQUENCE OF OPERATION

THE EXHAUST FAN SHALL BE CONTROLLED BY A REVERSE-ACTING, SPACE THERMOSTAT.

UPON SENSING A SPACE TEMPERATURE OF 85°F (ADJ.) THE FAN SHALL ENERGIZE AND OPERATE CONTINUOUSLY.

UPON SENSING A SPACE TEMPERATURE OF 80°F (ADJ.) THE FAN SHALL DE-ENERGIZE.

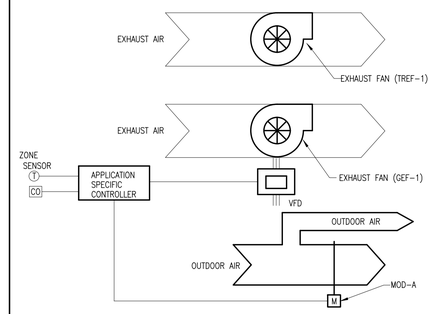

APPLICATION TABLE
EXHAUST FAN
TREF-1 & GEF-1

GARAGE AND TRASH ROOM EXHAUST FANS SEQUENCE OF OPERATION

THE EXHAUST FANS SHALL BE CONTROLLED THROUGH THE APPLICATION SPECIFIC CONTROLLER. THE SEQUENCE LISTED BELOW SHALL BE REVERSIBLE.

TRASH ROOM EXHAUST FAN (TREF-A) – THE TRASH ROOM EXHAUST FAN SHALL RUN CONTINUOUSLY, THE OUTDOOR AIR DAMPER SHALL BE OPEN.

GARAGE EXHAUST FAN (GEF-1) – THE GARAGE EXHAUST FAN SHALL RUN ON DEMAND.

CO DETECTOR– IF THE SPACE MULTIGAS DETECTOR SENSES A HIGH LEVEL OF CO GASES, THE EXHAUST FAN GEF-1 SHALL ENERGIZE AND MODULATE TO MAINTAIN THE CO LEVEL SET POINT AND THE OUTDOOR AIR DAMPERS SHALL BE FULLY OPEN.

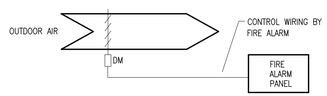

APPLICATION TABLE
FIRE/SMOKE DAMPER

FIRE/SMOKE DAMPER SEQUENCE OF OPERATION

THE SEQUENCE LISTED BELOW IS REVERSIBLE UNLESS NOTED OTHERWISE.

THE MOTORIZED DAMPER SHALL NORMALLY CLOSED, POWER OPEN TYPE.

THE SMOKE DAMPER SHALL BE CONTROLLED FROM THE FIRE ALARM PANEL. IN AN ALARM AT THE FIRE ALARM PANEL THE MOTORIZED DAMPER SHALL CLOSE. THE DAMPER SHALL THEN BE CONTROLLED (OPEN/CLOSED) AT THE FIRE ALARM PANEL.

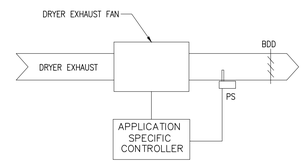

APPLICATION TABLE
DRYER BOOSTER FAN
DEF-A

DRYER EXHAUST BOOSTER FAN SEQUENCE OF OPERATION

THE DRYER EXHAUST FAN SHALL BE INTERLOCKED WITH THE DRYER.

THE DRYER EXHAUST FAN SHALL BE CONTROLLED BY A FACTORY SUPPLIED CONTROLLER.

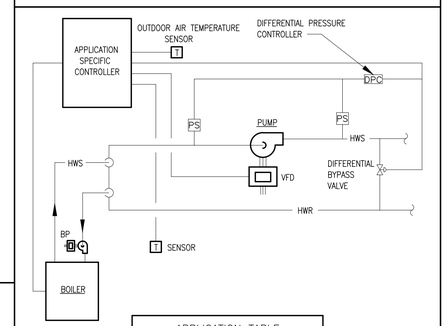

APPLICATION TABLE
BOILERS AND PUMPS
B-1 & BP-1 & BCP-1

HEATING HOT WATER BOILER AND ASSOCIATED PUMPS SEQUENCE OF OPERATION

THE HEATING SYSTEM BOILER AND PUMPS SHALL BE MONITORED AND CONTROLLED BY AN APPLICATION SPECIFIC CONTROLLER (ASC). THE SEQUENCES LISTED BELOW ARE REVERSIBLE UNLESS NOTED OTHERWISE.

BOILER SHALL BE ENERGIZED WHEN OUTSIDE AIR TEMPERATURE IS 65°F (ADJUSTABLE) OR BELOW. ABOVE 65°F (ADJUSTABLE) OUTSIDE AIR TEMPERATURE, BOILER SHALL BE DE-ENERGIZED. ON A CALL FOR HEAT BY THE WATER TEMPERATURE SENSOR, THE BOILER SHALL ENERGIZE AND OPERATE.

BOILER SHALL OPERATE THROUGH A BOILER CONTROL PANEL TO PROVIDE THE SPECIFIED HOT WATER RESET. THE HOT WATER BOILER SHALL OPERATE TO MAINTAIN A CONSTANT HOT WATER TEMPERATURE OF 140°.

DIFFERENTIAL PRESSURE SENSORS SHALL MEASURE DIFFERENTIAL PRESSURE ACROSS HWS & HWR WHERE INDICATED ON WATER FLOW SCHEMATIC. THE VARIABLE FREQUENCY DRIVE SHALL MODULATE BASED ON DIFFERENTIAL PRESSURE ACROSS MAINS TO MAINTAIN PRESSURE THROUGH PIPING SYSTEM. DURING LOW FLOW REQUIREMENTS THE BYPASS VALVE SHALL MODULATE OPEN FOR LOW FLOW REQUIREMENTS.

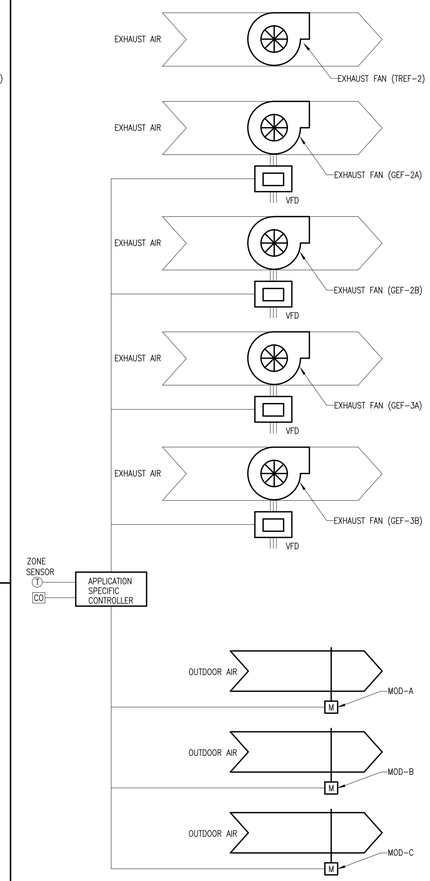

APPLICATION TABLE
EXHAUST FAN
TREF-2, GEF-2A, GEF-2B, GEF-3A, GEF-3B

GARAGE AND TRASH ROOM EXHAUST FANS SEQUENCE OF OPERATION

THE EXHAUST FANS SHALL BE CONTROLLED THROUGH THE APPLICATION SPECIFIC CONTROLLER. THE SEQUENCE LISTED BELOW SHALL BE REVERSIBLE.

TRASH ROOM EXHAUST FAN (TREF-2) – THE TRASH EXHAUST FAN SHALL RUN CONTINUOUSLY, ONE OUTDOOR AIR DAMPER (MOD-A) SHALL BE OPEN.

GARAGE EXHAUST FANS (GEF-2A AND GEF-2B) – THE GARAGE EXHAUST FANS SHALL RUN ON DEMAND.

GARAGE EXHAUST FAN (GEF-3A AND GEF-3B) – THE GARAGE EXHAUST FAN SHALL RUN CONTINUOUSLY ON LOW SPEED (500 CFM EACH) AND RAMP UP HIGH SPEED ON DEMAND.

CO DETECTOR– IF THE SPACE MULTIGAS DETECTOR SENSES A HIGH LEVEL OF CO GASES, THE EXHAUST FAN GEF-2 SHALL ENERGIZE. EXHAUST FANS GEF-2A, GEF-2B, GEF-3A, AND GEF-3B SHALL MODULATE TO MAINTAIN THE CO LEVEL SET POINT AND THE OUTDOOR AIR DAMPERS (MOD-A, MOD-B, AND MOD-C) SHALL BE FULLY OPEN.

APPLICATION TABLE
FIN TUBE RADIATION
FTR-A

HOT WATER FIN TUBE RADIATION SEQUENCE OF OPERATION

THE HOT WATER FIN TUBE RADIATION SHALL BE CONTROLLED THROUGH THE SPACE THERMOSTAT. THE SEQUENCE BELOW IS REVERSIBLE UNLESS NOTED OTHERWISE.

UPON A CALL FOR HEAT FROM THE SPACE THERMOSTAT, THE TWO WAY CONTROL VALVE SHALL MODULATE OPEN AS REQUIRED TO MAINTAIN THE SET POINT.

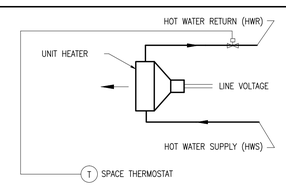

APPLICATION TABLE
UNIT HEATERS & CABINET UNIT HEATERS
UH & CUH

HOT WATER UNIT HEATER AND CABINET UNIT HEATER SEQUENCE OF OPERATION

THE UNIT HEATER/CABINET UNIT HEATER SHALL BE CONTROLLED THROUGH THE SPACE THERMOSTAT. THE SEQUENCE BELOW IS REVERSIBLE UNLESS NOTED OTHERWISE.

UPON A CALL FOR HEAT FROM THE SPACE THERMOSTAT, THE UNIT'S SUPPLY FAN SHALL BE ENERGIZED AND THE TWO WAY CONTROL VALVE SHALL MODULATE OPEN AS REQUIRED TO MAINTAIN THE SET POINT.

JD LaGrasse
Architects - Engineers - Interiors - Land Planning
One Elm Square, Andover, MA 01810
T. 978-470-3675 F. 978-470-3670
www.lagrassearchitects.com - E-mail: JDL@AOL.COM

BLW
BLW Engineers, Inc.
311 Great Road, Post Office Box 1551
Littleton, Massachusetts 01460
t: 978.486.4303 f: 978.828.0067
www.blwengineers.com
HVAC • Electrical • Plumbing • Fire Protection

STRUCTURAL ENGINEER: VEITAS & VEITAS ENGINEERS
CIVIL ENGINEER: MERIDIAN ASSOCIATES INC.
MEP: BLW ENGINEERS INC.

HATTERS POINT

AMESBURY, MA

prepared for: HATTERS POINT CAPITAL LLC.
location: PO BOX 1044 SUDBURY, MA 01776
title: HVAC CONTROLS

JDLA| 2015 ©
ALL PLANS, SPECIFICATIONS AND IDEAS ARE THE PROPERTY OF JDLA. RIGHTS OF USE ARE CONDITIONAL AND ARE GRANTED UNDER FULL COMPENSATION AND LIMITED TO A ONE-TIME USE TO CONSTRUCT A SINGLE PROJECT ON THE SITE SO INDICATED. USE OF THE WORK AND ANY DERIVATIVE WORK COVERED UNDER THIS COPYRIGHT FOR OTHER PROJECTS IS PROHIBITED. THE USE OR REPRODUCTION OF THESE PLANS FOR ANY OTHER CONSTRUCTION OR PERMIT APPLICATION IS STRICTLY PROHIBITED WITHOUT PRIOR WRITTEN PERMISSION OF JDLA.

Mark	Date
–	Revision #5 – 01.15.16
2	ICC Review Comments
–	Permit Set
–	CD Pricing Set
–	Construction Docs Progress
–	Design Development Set

Revisions

Date 11.15.2015
Scale AS NOTED
Job No. 2394
Sheet No. H0.06

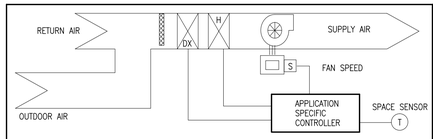

APPLICATION TABLE
GAS FURNACE
GF

GAS FURNACE WITH DX COOLING SEQUENCE OF OPERATION

THE GAS FURNACE AND REMOTE AIR COOLED CONDENSING UNIT SHALL BE CONTROLLED BY APPLICATION SPECIFIC CONTROLLER. THE SEQUENCE LISTED BELOW IS REVERSIBLE UNLESS NOTED OTHERWISE.

OCCUPIED MODE
UPON A CALL FOR HEAT FROM THE SPACE SENSOR THE GAS FIRED FURNACE SECTION SHALL ENERGIZE AND SHALL OPERATE TO MAINTAIN THE OCCUPIED SETPOINT.

UPON A CALL FOR COOLING FROM THE SPACE SENSOR, THE AIR COOLED CONDENSING UNIT SHALL BE ENERGIZED AND THE STAGES OF DX COOLING SHALL OPERATE TO MAINTAIN THE OCCUPIED SETPOINT.

UNOCCUPIED MODE
UPON A CALL FOR HEAT FROM THE SPACE SENSOR, THE GAS FIRED FURNACE SECTION SHALL ENERGIZE AND THE UNIT SHALL OPERATE TO MAINTAIN THE UNOCCUPIED SETPOINT, 60 F (ADJUSTABLE). COOLING SHALL BE LOCKED OUT IN THE UNOCCUPIED MODE.

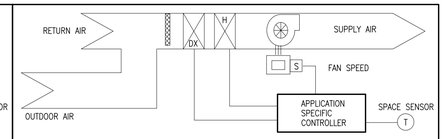

APPLICATION TABLE
HOT WATER FAN COIL
FCU-A

HOT WATER FAN COIL WITH DX COOLING SEQUENCE OF OPERATION

THE FAN COIL UNIT AND REMOTE AIR COOLED CONDENSING UNIT SHALL BE CONTROLLED BY APPLICATION SPECIFIC CONTROLLER. THE SEQUENCE LISTED BELOW IS REVERSIBLE UNLESS NOTED OTHERWISE.

UPON A CALL FOR HEAT FROM THE SPACE SENSOR THE THE UNIT'S SUPPLY FAN SHALL BE ENERGIZED AND THE TWO WAY CONTROL VALVE SHALL MODULATE OPEN AS REQUIRED TO MAINTAIN THE SET POINT.

UPON A CALL FOR COOLING FROM THE SPACE SENSOR, THE AIR COOLED CONDENSING UNIT SHALL BE ENERGIZED AND THE STAGES OF DX COOLING SHALL OPERATE TO MAINTAIN THE OCCUPIED SETPOINT.

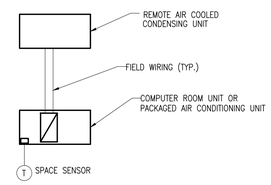

APPLICATION TABLE
ELEVATOR MACHINE ROOM PACKAGED AIR CONDITIONING UNIT
PAC-1, PAC-2

PACKAGED AIR CONDITIONING UNIT SEQUENCE OF OPERATION

THE PACKAGED AIR CONDITIONING UNIT SHALL OPERATE THROUGH ITS PACKAGED SYSTEM TO MAINTAIN SPACE CONDITION SETPOINT.

THE SPACE TEMPERATURE SENSOR SHALL MONITOR THE ROOM SPACE TEMPERATURE. UPON SENSING A HIGH LIMIT SPACE TEMPERATURE (ADJUSTABLE) OR A LOW LIMIT SPACE TEMPERATURE (ADJUSTABLE), THE APPROPRIATE ALARM SIGNAL SHALL BE TRANSMITTED TO ASC.

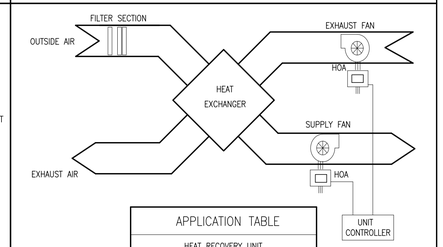

APPLICATION TABLE
HEAT RECOVERY UNIT
ERV-A & ERV-B

HEAT RECOVERY UNIT SEQUENCE OF OPERATION

THE THE SUPPLY AND EXHAUST FAN SHALL BE CONTROLLED BY THE APPLICATION UNIT CONTROLLER. THE SEQUENCE BELOW IS REVERSIBLE UNLESS NOTED OTHERWISE.

THE UNIT'S SUPPLY AND EXHAUST FANS SHALL ENERGIZE AND OPERATE CONTINUOUSLY.

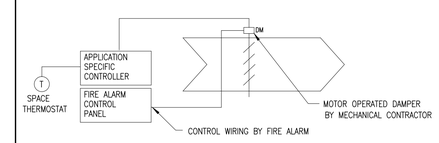

APPLICATION TABLE
MOTORIZED DAMPER

ELEVATOR HOISTWAY VENT SEQUENCE OF OPERATION

THE ELEVATOR HOISTWAY VENT SHALL BE CONTROLLED VIA THE FIRE ALARM AND SPACE THERMOSTAT. THE SEQUENCE LISTED BELOW SHALL BE REVERSIBLE.

UPON A SMOKE CONDITION IN THE ELEVATOR HOISTWAY AND/OR THE ELEVATOR MACHINE ROOM AS SIGNALED BY THE FIRE ALARM CONTROL PANEL, THE MOTOR OPERATED DAMPER SHALL OPEN. THE HOISTWAY DAMPER SHALL BE ABLE TO BE CONTROLLED MANUALLY THROUGH THE FIRE ALARM CONTROL PANEL.

UPON SENSING A SPACE TEMPERATURE ABOVE THE MAXIMUM SET POINT OF 95°F (ADJ.) THE MOTORIZED DAMPER SHALL OPEN FULLY.

COMMONWEALTH OF MASSACHUSETTS
WILLIAM J. LAGIOIA
MECHANICAL
NO. 14449
REGISTERED PROFESSIONAL ENGINEER

JD LaGioia
Architects - Engineers - Interiors - Land Planning
One Elm Square, Andover, MA 01810
T. 978-470-3675 F. 978-470-3670
www.lagioiaarchitects.com - E-mail: JDLA@AOL.COM

BLW
BLW Engineers, Inc.
311 Great Road, Post Office Box 1551
Littleton, Massachusetts 01460
t: 978.486.4303 f: 978.428.0067
www.blwengineers.com
HVAC • Electrical • Plumbing • Fire Protection

STRUCTURAL ENGINEER:
VEITAS & VEITAS ENGINEERS
CIVIL ENGINEER:
MERIDIAN ASSOCIATES INC.
MEP:
BLW ENGINEERS INC.

HATTERS POINT

AMESBURY, MA

prepared for: HATTERS POINT CAPITAL LLC.
location: PO BOX 1044 SUDBURY, MA 01776
title: HVAC CONTROLS

JDLA| 2015 ©
ALL PLANS, SPECIFICATIONS AND IDEAS ARE THE PROPERTY OF JDLA. RIGHTS OF USE ARE CONDITIONAL AND ARE GRANTED UNDER FULL COMPENSATION AND LIMITED TO A ONE-TIME USE TO CONSTRUCT A SINGLE PROJECT ON THE SITE SO INDICATED. USE OF THE WORK AND ANY DERIVATIVE WORK COVERED UNDER THIS COPYRIGHT FOR OTHER PROJECTS IS PROHIBITED. THE USE OR REPRODUCTION OF THESE PLANS FOR ANY OTHER CONSTRUCTION OR PERMIT APPLICATION IS STRICTLY PROHIBITED WITHOUT PRIOR WRITTEN PERMISSION OF JDLA.

Mark	Date
–	Revision #5 – 01.15.16
2	ICC Review Comments
–	Permit Set
–	CD Pricing Set
–	Construction Docs Progress
–	Design Development Set

Revisions

Date 11.15.2015
Scale AS NOTED
Job No. 2394
Sheet No. H0.07

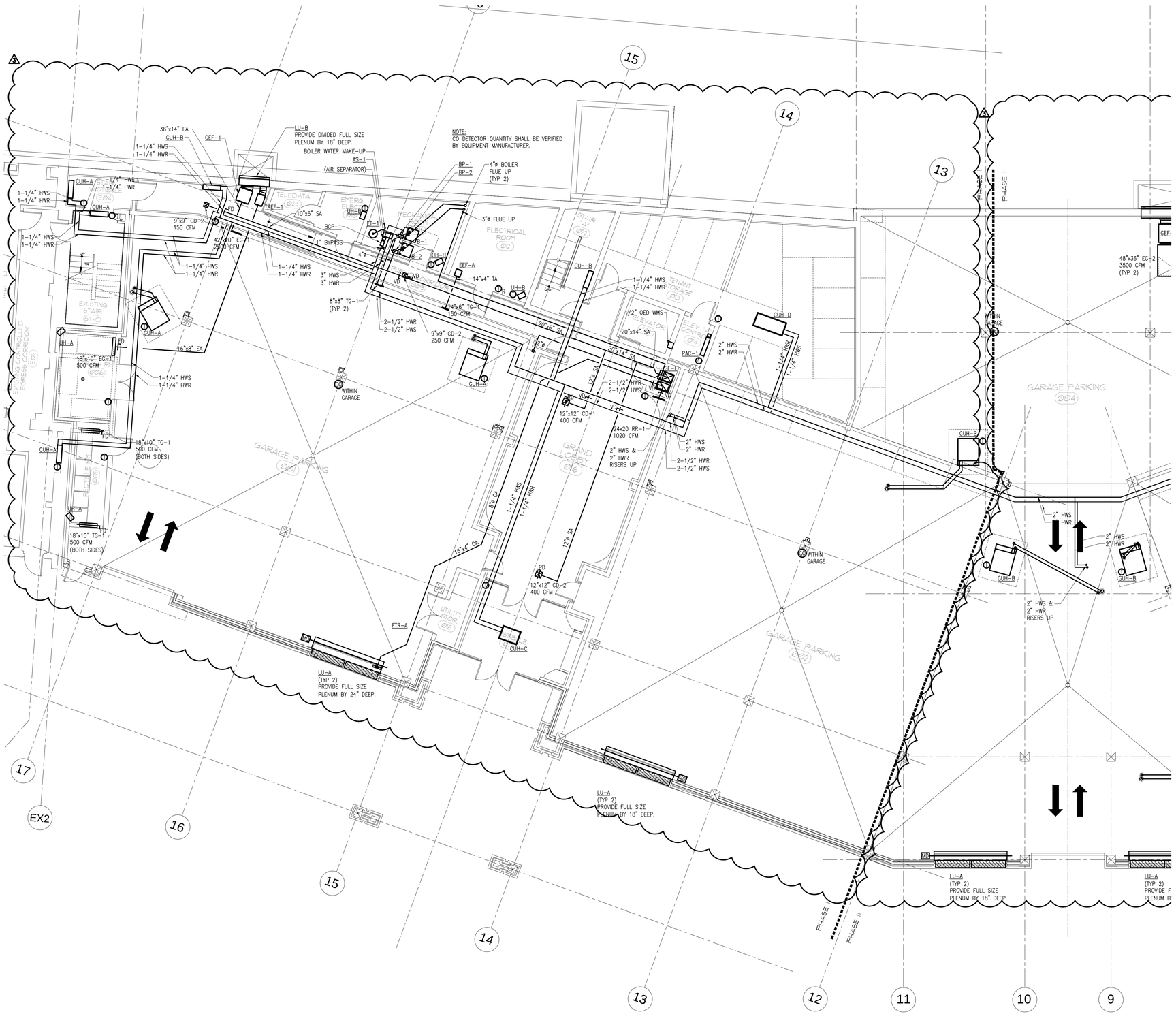

GARAGE LEVEL PART PLAN "A"

SCALE: 1/8"=1'-0" (1 / H1.0A)

JD LaGrasse
Architects - Engineers - Interiors - Land Planning
One Elm Square, Andover, MA 01810
T: 978-470-3675 F: 978-470-3670
www.lagrassearchitects.com - E-mail: JDLA@AOL.COM

BLW
BLW Engineers, Inc.
311 Great Road, Post Office Box 1551
Littleton, Massachusetts 01460
t: 978.486.4303 f: 978.428.0067
www.blwengineers.com
HVAC • Electrical • Plumbing • Fire Protection

STRUCTURAL ENGINEER:
VEITAS & VEITAS ENGINEERS
CIVIL ENGINEER:
MERIDIAN ASSOCIATES INC.
MEP:
BLW ENGINEERS INC.

HATTERS POINT

AMESBURY, MA

prepared for: HATTERS POINT CAPITAL LLC.
location: PO BOX 1044 SUDBURY, MA 01776
title

HVAC GARAGE LEVEL, PART PLAN"A"

JDLA| 2015 ©
ALL PLANS, SPECIFICATIONS AND IDEAS ARE THE PROPERTY OF JDLA. RIGHTS OF USE ARE CONDITIONAL AND ARE GRANTED UNDER FULL COMPENSATION AND LIMITED TO A ONE-TIME USE TO CONSTRUCT A SINGLE PROJECT ON THE SITE SO INDICATED. USE OF THE WORK AND ANY DERIVATIVE WORK COVERED UNDER THIS COPYRIGHT FOR OTHER PROJECTS IS PROHIBITED. THE USE OR REPRODUCTION OF THESE PLANS FOR ANY OTHER CONSTRUCTION OR PERMIT APPLICATION IS STRICTLY PROHIBITED WITHOUT PRIOR WRITTEN PERMISSION OF JDLA.

Mark	Date
–	Revision #5 – 01.15.16
2	ICC Review Comments
–	Permit Set
–	CD Pricing Set
–	Construction Docs Progress
–	Design Development Set

Revisions

Date	11.15.2015
Scale	AS NOTED
Job No.	2394
Sheet No.	H1.0A

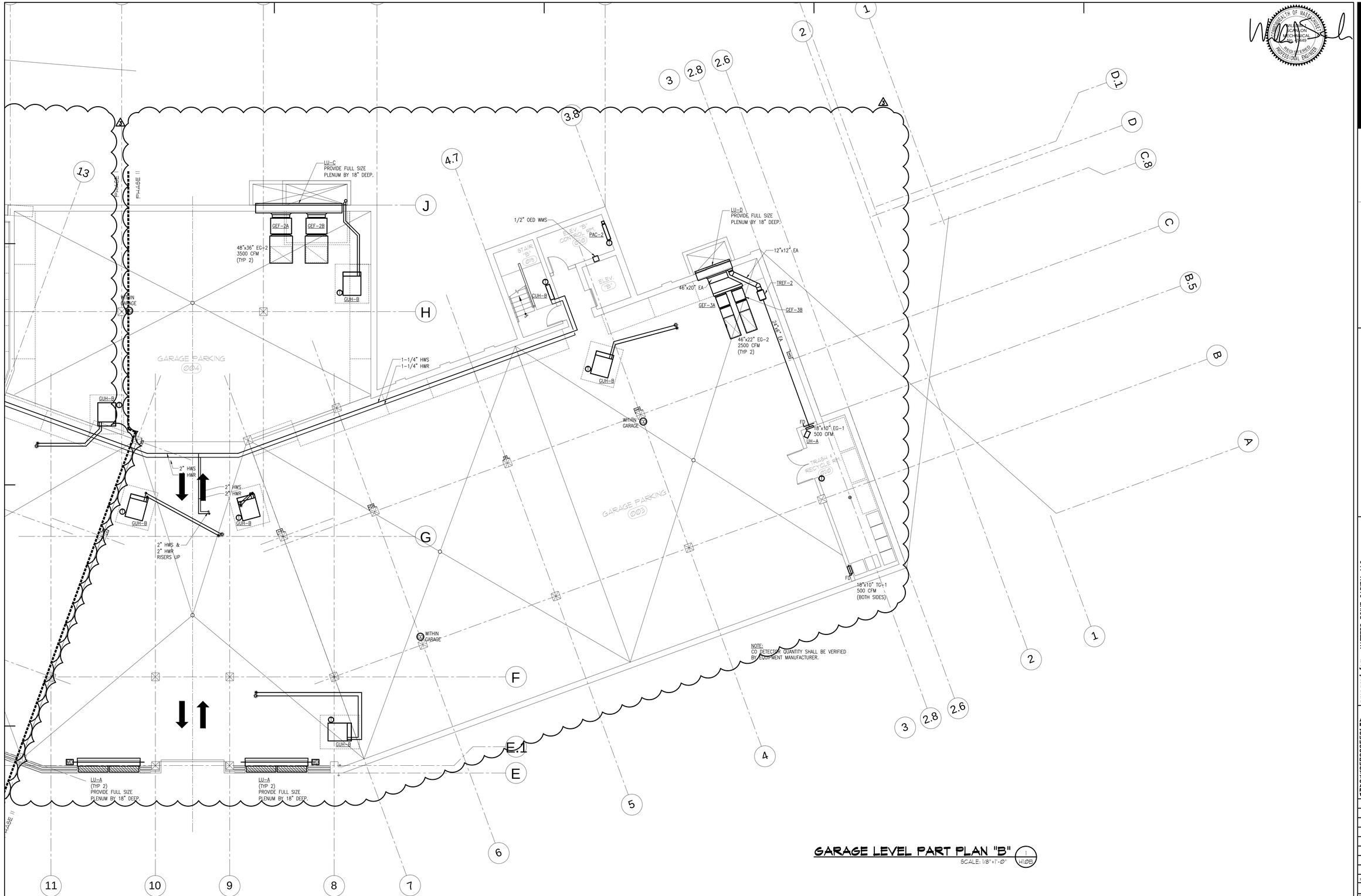

GARAGE LEVEL PART PLAN "B"

SCALE: 1/8"=1'-0"

H1.0B

JD LaGrasse
Architects - Engineers - Interiors - Land Planning
One Elm Square, Andover, MA 01810
T: 978-470-3675 F: 978-470-3670
www.lagrassearchitects.com E-mail: JDLA@AOL.COM

BLW
BLW Engineers, Inc.
311 Great Road, Post Office Box 1551
Littleton, Massachusetts 01460
t: 978.486.4303 f: 978.428.0067
www.blwengineers.com
HVAC • Electrical • Plumbing • Fire Protection

STRUCTURAL ENGINEER:
VEITAS & VEITAS ENGINEERS
CIVIL ENGINEER:
MERIDIAN ASSOCIATES INC.
MEP:
BLW ENGINEERS INC.

HATTERS POINT

AMESBURY, MA

prepared for: HATTERS POINT CAPITAL LLC.
location: PO BOX 1044 SUDBURY, MA 01776
title

HVAC GARAGE LEVEL, PART PLAN "B"

JDLA| 2015 ©

ALL PLANS, SPECIFICATIONS AND IDEAS ARE THE PROPERTY OF JDLA. RIGHTS OF USE ARE CONDITIONAL AND ARE GRANTED UNDER FULL COMPENSATION AND LIMITED TO A ONE-TIME USE TO CONSTRUCT A SINGLE PROJECT ON THE SITE SO INDICATED. USE OF THE WORK AND ANY DERIVATIVE WORK COVERED UNDER THIS COPYRIGHT FOR OTHER PROJECTS IS PROHIBITED. THE USE OR REPRODUCTION OF THESE PLANS FOR ANY OTHER CONSTRUCTION OR PERMIT APPLICATION IS STRICTLY PROHIBITED WITHOUT PRIOR WRITTEN PERMISSION OF JDLA.

Mark	Date
–	Revision #5 – 01.15.16
2	ICC Review Comments
–	Permit Set
–	CD Pricing Set
–	Construction Docs Progress
–	Design Development Set

Revisions

Date	11.15.2015
Scale	AS NOTED
Job No.	2394
Sheet No.	H1.0B

NOTES:
1. 3" FLUE AND 3" COMBUSTION AIR RISERS UP THRU ROOF. CONNECT TO GAS FURNACE IN UNIT.
2. 2" CONDENSATE (DRAIN), 2" HWS, AND 2" HWR RISERS UP AND DOWN. REFER TO PLUMBING DRAWINGS FOR CONNECTION OF CONDENSATE TO SYSTEM.
3. 3" FLUE AND 3" COMBUSTION AIR THRU WALL. TERMINATE WITH CONCENTRIC VENT PER MANUFACTURER'S INSTRUCTIONS.

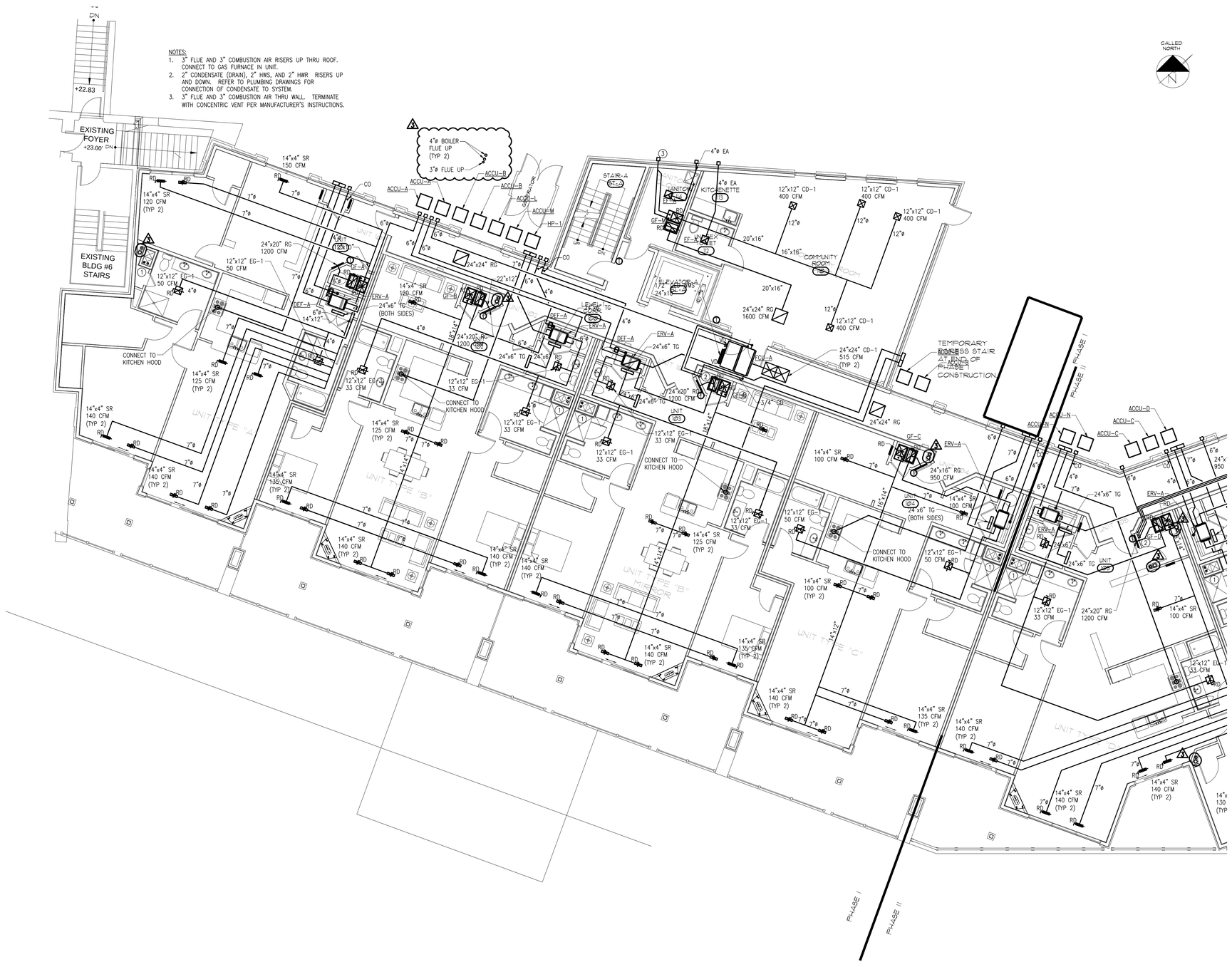

CALLED NORTH

LEVEL I PART PLAN "A"
SCALE: 1/8"=1'-0"

JD LaGrasse
Architects - Engineers - Interiors - Land Planning
One Elm Square, Andover, MA 01810
T. 978-470-3675 F. 978-470-3670
www.lagrassearchitects.com E-mail: JDLA@AOL.COM

BLW
BLW Engineers, Inc.
311 Great Road, Post Office Box 1551
Littleton, Massachusetts 01460
t: 978.486.4303 f: 978.428.0067
www.blwengineers.com
HVAC • Electrical • Plumbing • Fire Protection

STRUCTURAL ENGINEER: VEITAS & VEITAS ENGINEERS
CIVIL ENGINEER: MERIDIAN ASSOCIATES INC.
MEP: BLW ENGINEERS INC.

HATTERS POINT

AMESBURY, MA

prepared for: HATTERS POINT CAPITAL LLC.
location: PO BOX 1044 SUDBURY, MA 01776
title

HVAC
LEVEL-1, PART-PLAN"A"

JDLA| 2015 ©
ALL PLANS, SPECIFICATIONS AND IDEAS ARE THE PROPERTY OF JDLA. RIGHTS OF USE ARE CONDITIONAL AND ARE GRANTED UNDER FULL COMPENSATION AND LIMITED TO A ONE-TIME USE TO CONSTRUCT A SINGLE PROJECT ON THE SITE SO INDICATED. USE OF THE WORK AND ANY DERIVATIVE WORK COVERED UNDER THIS COPYRIGHT FOR OTHER PROJECTS IS PROHIBITED. THE USE OR REPRODUCTION OF THESE PLANS FOR ANY OTHER CONSTRUCTION OR PERMIT APPLICATION IS STRICTLY PROHIBITED WITHOUT PRIOR WRITTEN PERMISSION OF JDLA.

Mark	Date
–	Revision #5 – 01.15.16
2	ICC Review Comments
–	Permit Set
–	CD Pricing Set
–	Construction Docs Progress
–	Design Development Set

Revisions

Date 11.15.2015
Scale AS NOTED
Job No. 2394
Sheet No. H1.1A

NOTES:
1. 3" FLUE AND 3" COMBUSTION AIR RISERS UP THRU ROOF. CONNECT TO GAS FURNACE IN UNIT.
2. 2" CONDENSATE (DRAIN), 2" HWS, AND 2" HWR RISERS UP AND DOWN. REFER TO PLUMBING DRAWINGS FOR CONNECTION OF CONDENSATE TO SYSTEM.

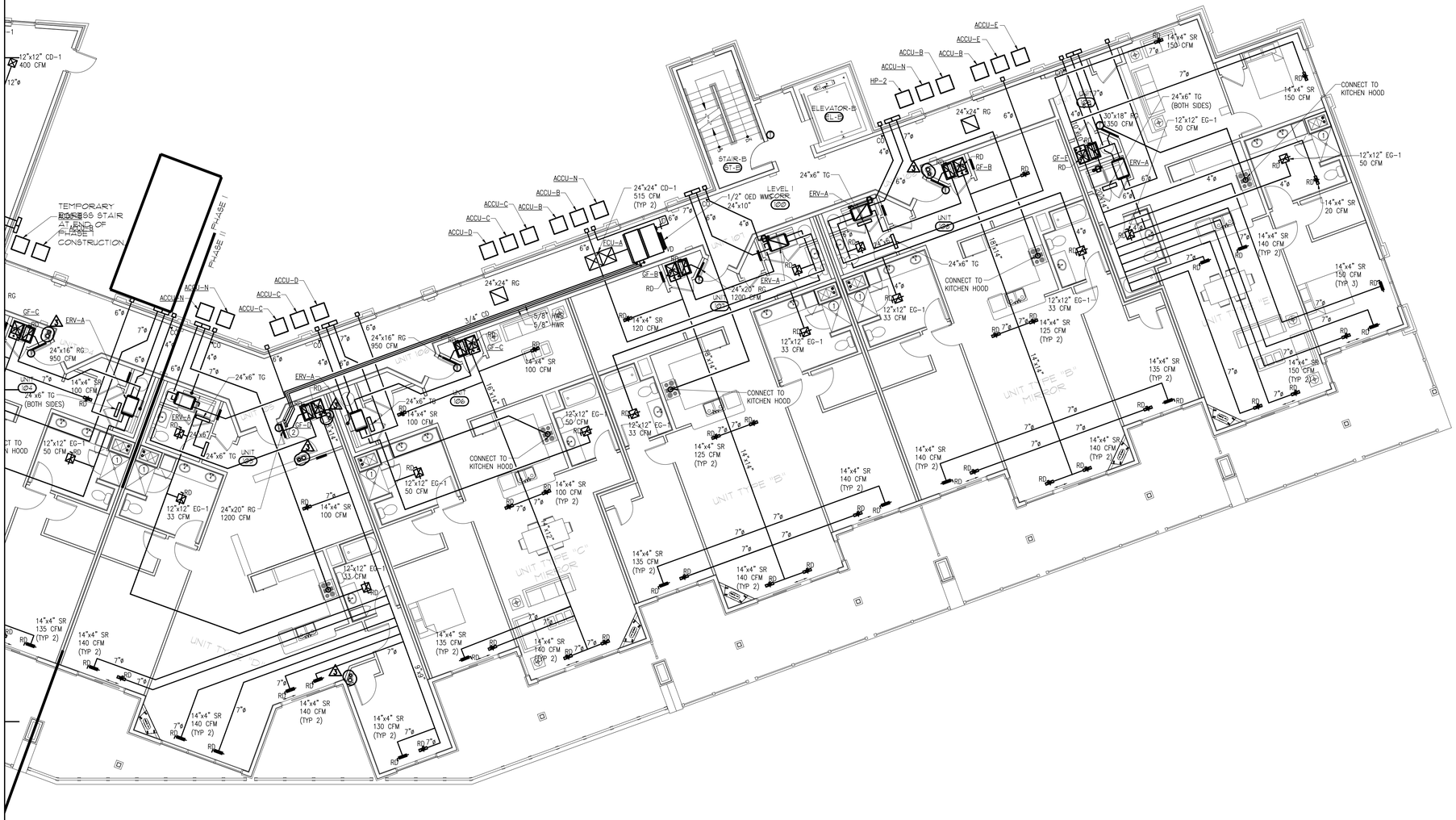

LEVEL I PART PLAN "B"

SCALE: 1/8"=1'-0"

1 H1.1B

JD LaGrasse
Architects - Engineers - Interiors - Land Planning
One Elm Square, Andover, MA 01810
T: 978-470-3675 F: 978-470-3670
www.lagrassearchitects.com E-mail: JDLA@AOL.COM

BLW
BLW Engineers, Inc.
311 Great Road, Post Office Box 1551
Littleton, Massachusetts 01460
t: 978.486.4303 f: 978.828.0067
www.blwengineers.com
HVAC • Electrical • Plumbing • Fire Protection

STRUCTURAL ENGINEER: VEITAS & VEITAS ENGINEERS
CIVIL ENGINEER: MERIDIAN ASSOCIATES INC.
MEP: BLW ENGINEERS INC.

HATTERS POINT

AMESBURY, MA

prepared for: HATTERS POINT CAPITAL LLC.
location: PO BOX 1044 SUDBURY, MA 01776
title: HVAC LEVEL-1,PART-PLAN"B"

JDLA| 2015 ©
ALL PLANS, SPECIFICATIONS AND IDEAS ARE THE PROPERTY OF JDLA. RIGHTS OF USE ARE CONDITIONAL AND ARE GRANTED UNDER FULL COMPENSATION AND LIMITED TO A ONE-TIME USE TO CONSTRUCT A SINGLE PROJECT ON THE SITE SO INDICATED. USE OF THE WORK AND ANY DERIVATIVE WORK COVERED UNDER THIS COPYRIGHT FOR OTHER PROJECTS IS PROHIBITED. THE USE OR REPRODUCTION OF THESE PLANS FOR ANY OTHER CONSTRUCTION OR PERMIT APPLICATION IS STRICTLY PROHIBITED WITHOUT PRIOR WRITTEN PERMISSION OF JDLA.

Mark	Date
–	Revision #5 – 01.15.16
2	ICC Review Comments
–	Permit Set
–	CD Pricing Set
–	Construction Docs Progress
–	Design Development Set

Revisions

Date	11.15.2015
Scale	AS NOTED
Job No.	2394
Sheet No.	H1.1B

NOTES:
1. 3" FLUE AND 3" COMBUSTION AIR RISERS UP THRU ROOF. CONNECT TO GAS FURNACE IN UNIT.
2. 2" CONDENSATE (DRAIN), 2" HWS, AND 2" HWR RISERS UP AND DOWN.

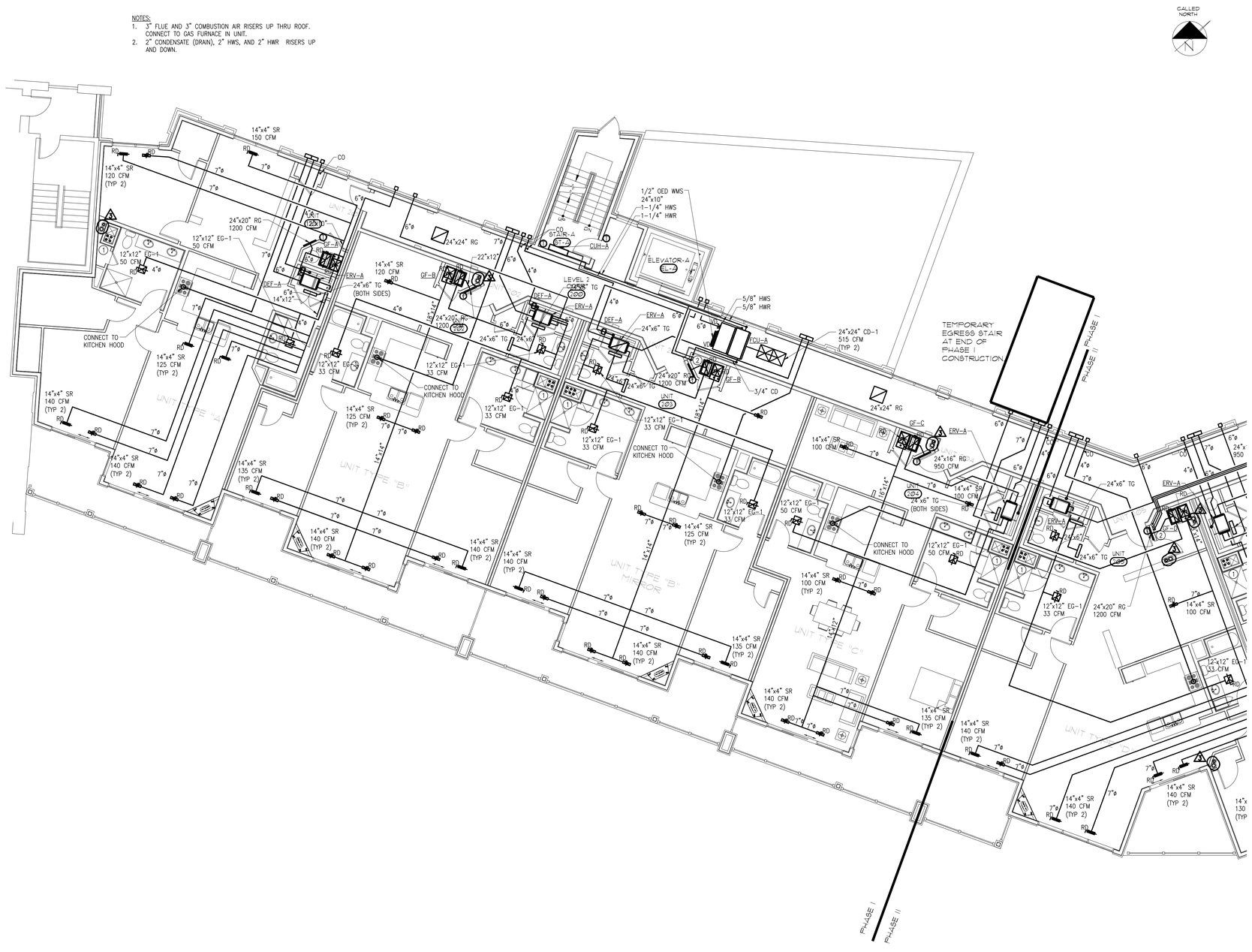

LEVEL 2 PART PLAN "A"
SCALE: 1/8"=1'-0"
1 H1.2A

JD LaGrasse
Architects - Engineers - Interiors - Land Planning
One Elm Square, Andover, MA 01810
T. 978-470-3675 F. 978-470-3670
www.lagrassearchitects.com E-mail: JDL@AOL.COM

BLW
BLW Engineers, Inc.
311 Great Road, Post Office Box 1551
Littleton, Massachusetts 01460
t: 978.486.4303 f: 978.828.0067
www.blwengineers.com
HVAC • Electrical • Plumbing • Fire Protection

STRUCTURAL ENGINEER: VEITAS & VEITAS ENGINEERS
CIVIL ENGINEER: MERIDIAN ASSOCIATES INC.
MEP: BLW ENGINEERS INC.

HATTERS POINT

AMESBURY, MA

prepared for: HATTERS POINT CAPITAL LLC.
location: PO BOX 1044 SUDBURY, MA 01776
title

HVAC
LEVEL-2,PART-PLAN"A"

JDLAI 2015 ©
ALL PLANS, SPECIFICATIONS AND IDEAS ARE THE PROPERTY OF JDLA. RIGHTS OF USE ARE CONDITIONAL AND ARE GRANTED UNDER FULL COMPENSATION AND LIMITED TO A ONE-TIME USE TO CONSTRUCT A SINGLE PROJECT ON THE SITE SO INDICATED. USE OF THE WORK AND ANY DERIVATIVE WORK COVERED UNDER THIS COPYRIGHT FOR OTHER PROJECTS IS PROHIBITED. THE USE OR REPRODUCTION OF THESE PLANS FOR ANY OTHER CONSTRUCTION OR PERMIT APPLICATION IS STRICTLY PROHIBITED WITHOUT PRIOR WRITTEN PERMISSION OF JDLA.

Mark	Date
–	Revision #5 – 01.15.16
2	ICC Review Comments
–	Permit Set
–	CD Pricing Set
–	Construction Docs Progress
–	Design Development Set

Revisions

Date 11.15.2015
Scale AS NOTED
Job No. 2394
Sheet No. H1.2A

NOTES:
1. 3" FLUE AND 3" COMBUSTION AIR RISERS UP THRU ROOF. CONNECT TO GAS FURNACE IN UNIT.
2. 2" CONDENSATE (DRAIN), 2" HWS, AND 2" HWR RISERS UP AND DOWN.

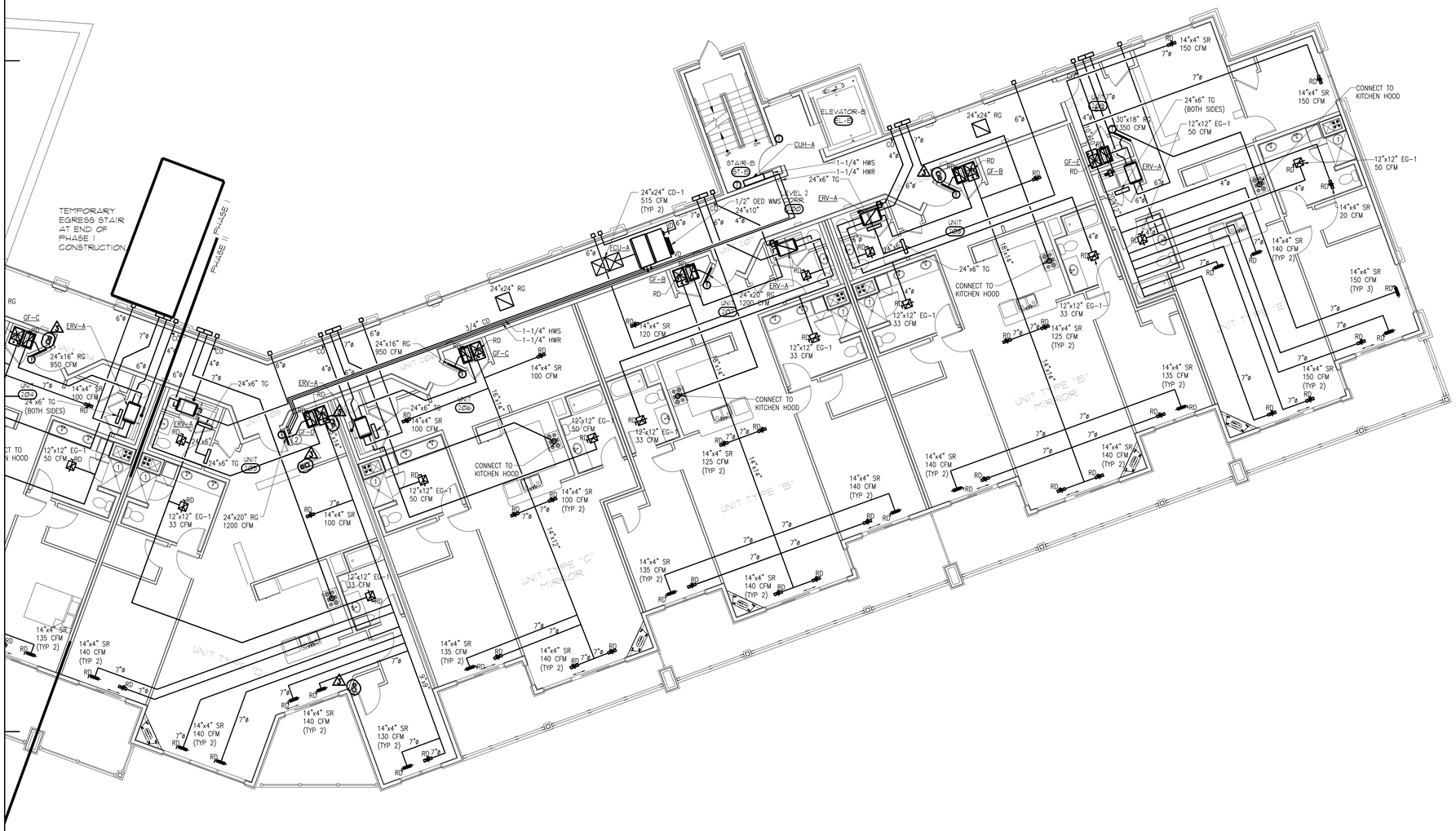

LEVEL 2 PART PLAN "B"

SCALE: 1/8"=1'-0" (1 / H1.2B)

JD LaGrasse
Architects - Engineers - Interiors - Land Planning
One Elm Square, Andover, MA 01810
T. 978-470-3675 F. 978-470-3670
www.lagrassearchitects.com E-mail: JDLA@AOL.COM

BLW Engineers, Inc.
311 Great Road, Post Office Box 1551
Littleton, Massachusetts 01460
t: 978.486.4303 f: 978.828.0067
www.blwengineers.com
HVAC • Electrical • Plumbing • Fire Protection

STRUCTURAL ENGINEER: VEITAS & VEITAS ENGINEERS
CIVIL ENGINEER: MERIDIAN ASSOCIATES INC.
MEP: BLW ENGINEERS INC.

HATTERS POINT

AMESBURY, MA

prepared for: HATTERS POINT CAPITAL LLC.
location: PO BOX 1044 SUDBURY, MA 01776
title: HVAC LEVEL-2,PART-PLAN"B"

JDLA| 2015 ©
ALL PLANS, SPECIFICATIONS AND IDEAS ARE THE PROPERTY OF JDLA. RIGHTS OF USE ARE CONDITIONAL AND ARE GRANTED UNDER FULL COMPENSATION AND LIMITED TO A ONE-TIME USE TO CONSTRUCT A SINGLE PROJECT ON THE SITE SO INDICATED. USE OF THE WORK AND ANY DERIVATIVE WORK COVERED UNDER THIS COPYRIGHT FOR OTHER PROJECTS IS PROHIBITED. THE USE OR REPRODUCTION OF THESE PLANS, FOR ANY OTHER CONSTRUCTION OR PERMIT APPLICATION IS STRICTLY PROHIBITED WITHOUT PRIOR WRITTEN PERMISSION OF JDLA.

Mark	Date
–	Revision #5 – 01.15.16
2	ICC Review Comments
–	Permit Set
–	CD Pricing Set
–	Construction Docs Progress
–	Design Development Set

Revisions

Date	11.15.2015
Scale	AS NOTED
Job No.	2394
Sheet No.	H1.2B

NOTES:
1. 3" FLUE AND 3" COMBUSTION AIR RISERS UP THRU ROOF. CONNECT TO GAS FURNACE IN UNIT.
2. 2" CONDENSATE (DRAIN), 2" HWS, AND 2" HWR RISERS UP AND DOWN.

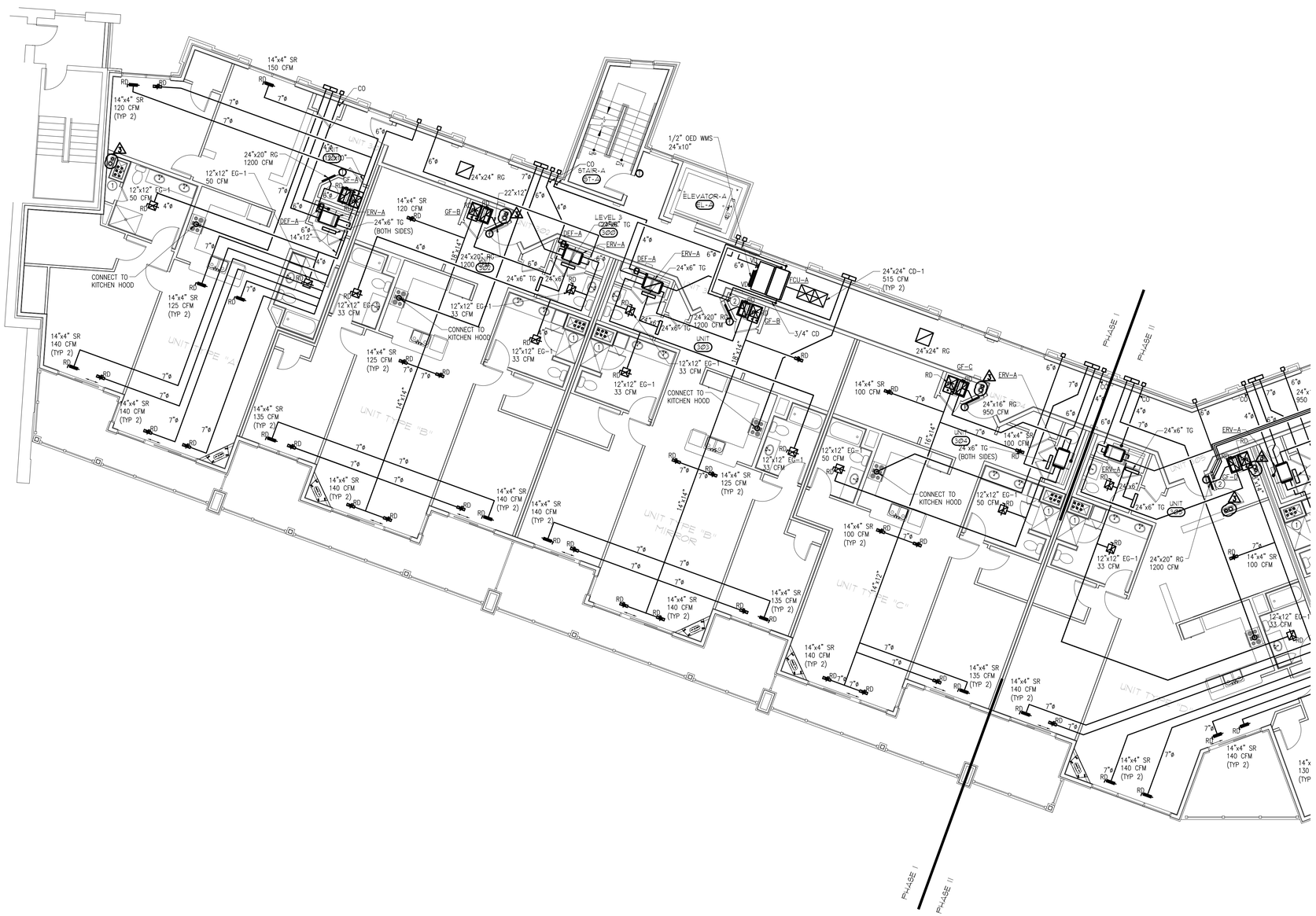

LEVEL 3 PART PLAN "A"

SCALE: 1/8"=1'-0" (1 / H1.3A)

JD LaGrasse
Architects - Engineers - Interiors - Land Planning
One Elm Square, Andover, MA 01810
T. 978-470-3675 F. 978-470-3670
www.lagrassearchitects.com E-mail: JDLA@AOL.COM

BLW
BLW Engineers, Inc.
311 Great Road, Post Office Box 1551
Littleton, Massachusetts 01460
t: 978.486.4303 f: 978.428.0067
www.blwengineers.com
HVAC • Electrical • Plumbing • Fire Protection

STRUCTURAL ENGINEER: VEITAS & VEITAS ENGINEERS
CIVIL ENGINEER: MERIDIAN ASSOCIATES INC.
MEP: BLW ENGINEERS INC.

HATTERS POINT

AMESBURY, MA

prepared for: HATTERS POINT CAPITAL LLC.
location: PO BOX 1044 SUDBURY, MA 01776
title: HVAC LEVEL-3,PART-PLAN"A"

JDLA| 2015 ©
ALL PLANS, SPECIFICATIONS AND IDEAS ARE THE PROPERTY OF JDLA. RIGHTS OF USE ARE CONDITIONAL AND ARE GRANTED UNDER FULL COMPENSATION AND LIMITED TO A ONE-TIME USE TO CONSTRUCT A SINGLE PROJECT ON THE SITE SO INDICATED. USE OF THE WORK AND ANY DERIVATIVE WORK COVERED UNDER THIS COPYRIGHT FOR OTHER PROJECTS IS PROHIBITED. THE USE OR REPRODUCTION OF THESE PLANS FOR ANY OTHER CONSTRUCTION OR PERMIT APPLICATION IS STRICTLY PROHIBITED WITHOUT PRIOR WRITTEN PERMISSION OF JDLA.

Mark	Date
–	Revision #5 – 01.15.16
2	ICC Review Comments
–	Permit Set
–	CD Pricing Set
–	Construction Docs Progress
–	Design Development Set

Revisions

Date	11.15.2015
Scale	AS NOTED
Job No.	2394
Sheet No.	H1.3A

NOTES:
1. 3" FLUE AND 3" COMBUSTION AIR RISERS UP THRU ROOF. CONNECT TO GAS FURNACE IN UNIT.
2. 2" CONDENSATE (DRAIN), 2" HWS, AND 2" HWR RISERS UP AND DOWN.

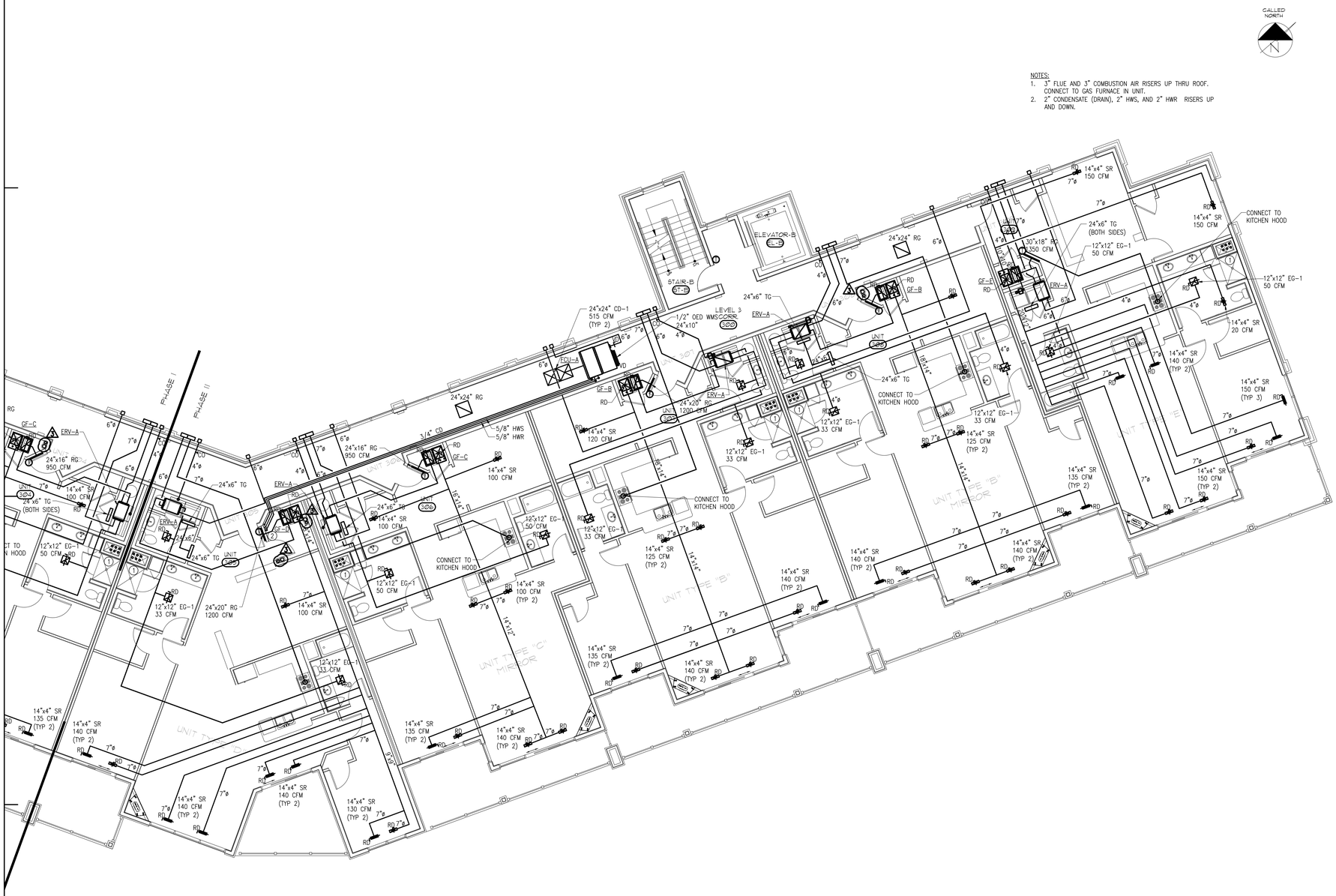

LEVEL 3 PART PLAN "B"

SCALE: 1/8"=1'-0"

1 / H1.3B

JD LaGrasse
Architects - Engineers - Interiors - Land Planning
One Elm Square, Andover, MA 01810
T: 978-470-3675 F: 978-470-3670
www.lagrassearchitects.com E-mail: JDLA@AOL.COM

BLW
BLW Engineers, Inc.
311 Great Road, Post Office Box 1551
Littleton, Massachusetts 01460
t: 978.486.4303 f: 978.428.0067
www.blwengineers.com
HVAC • Electrical • Plumbing • Fire Protection

STRUCTURAL ENGINEER: VEITAS & VEITAS ENGINEERS
CIVIL ENGINEER: MERIDIAN ASSOCIATES INC.
MEP: BLW ENGINEERS INC.

HATTERS POINT

AMESBURY, MA

prepared for: HATTERS POINT CAPITAL LLC.
location: PO BOX 1044 SUDBURY, MA 01776
title: HVAC LEVEL-3,PART-PLAN"B"

JDLA| 2015 ©
ALL PLANS, SPECIFICATIONS AND IDEAS ARE THE PROPERTY OF JDLA. RIGHTS OF USE ARE CONDITIONAL AND ARE GRANTED UNDER FULL COMPENSATION AND LIMITED TO A ONE-TIME USE TO CONSTRUCT A SINGLE PROJECT ON THE SITE SO INDICATED. USE OF THE WORK AND ANY DERIVATIVE WORK COVERED UNDER THIS COPYRIGHT FOR OTHER PROJECTS IS PROHIBITED. THE USE OR REPRODUCTION OF THESE PLANS, FOR ANY OTHER CONSTRUCTION OR PERMIT APPLICATION IS STRICTLY PROHIBITED WITHOUT PRIOR WRITTEN PERMISSION OF JDLA.

Mark	Date
–	Revision #5 – 01.15.16
2	ICC Review Comments
–	Permit Set
–	CD Pricing Set
–	Construction Docs Progress
–	Design Development Set

Revisions

Date	11.15.2015
Scale	AS NOTED
Job No.	2394
Sheet No.	H1.3B

NOTES:
1. 3" FLUE AND 3" COMBUSTION AIR RISERS UP THRU ROOF. CONNECT TO GAS FURNACE IN UNIT.
2. 2" CONDENSATE (DRAIN), 2" HWS, AND 2" HWR RISERS UP AND DOWN.

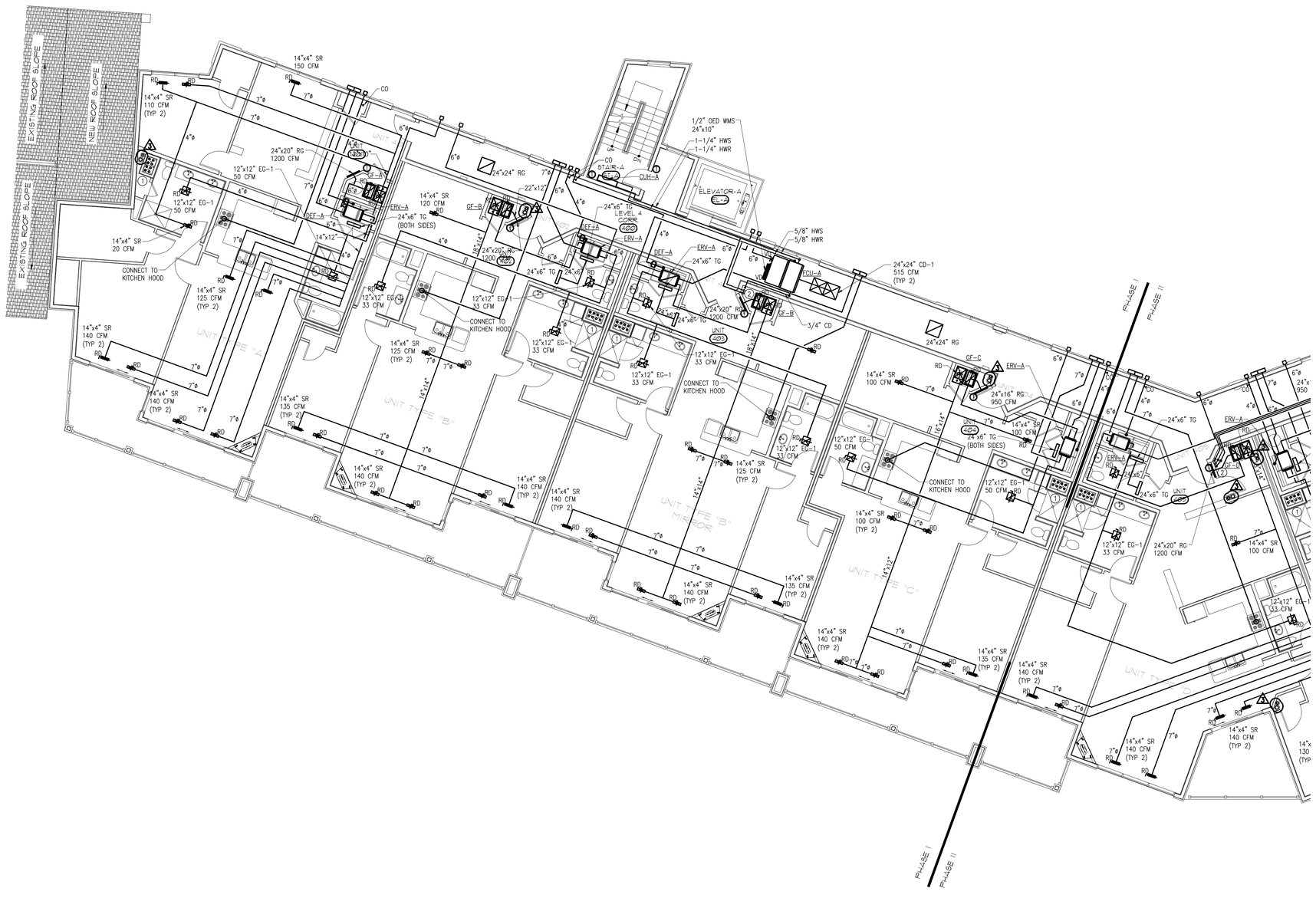

CALLED NORTH

LEVEL 4 PART PLAN "A"
SCALE: 1/8"=1'-0"

JD LaGrasse
Architects - Engineers - Interiors - Land Planning
One Elm Square, Andover, MA 01810
T. 978-470-3675 F. 978-470-3670
www.lagrassearchitects.com E-mail: JDLA@AOL.COM

BLW
BLW Engineers, Inc.
311 Great Road, Post Office Box 1551
Littleton, Massachusetts 01460
t: 978.486.4303 f: 978.828.0067
www.blwengineers.com
HVAC • Electrical • Plumbing • Fire Protection

STRUCTURAL ENGINEER: VEITAS & VEITAS ENGINEERS
CIVIL ENGINEER: MERIDIAN ASSOCIATES INC.
MEP: BLW ENGINEERS INC.

HATTERS POINT

AMESBURY, MA

prepared for: HATTERS POINT CAPITAL LLC.
location: PO BOX 1044 SUDBURY, MA 01776
title: HVAC LEVEL-4,PART-PLAN"A"

JDLA| 2015 ©
ALL PLANS, SPECIFICATIONS AND IDEAS ARE THE PROPERTY OF JDLA. RIGHTS OF USE ARE CONDITIONAL AND ARE GRANTED UNDER FULL COMPENSATION AND LIMITED TO A ONE-TIME USE TO CONSTRUCT A SINGLE PROJECT ON THE SITE SO INDICATED. USE OF THE WORK AND ANY DERIVATIVE WORK COVERED UNDER THIS COPYRIGHT FOR OTHER PROJECTS IS PROHIBITED. THE USE OR REPRODUCTION OF THESE PLANS FOR ANY OTHER CONSTRUCTION OR PERMIT APPLICATION IS STRICTLY PROHIBITED WITHOUT PRIOR WRITTEN PERMISSION OF JDLA.

Mark	Date
–	Revision #5 – 01.15.16
2	ICC Review Comments
–	Permit Set
–	CD Pricing Set
–	Construction Docs Progress
–	Design Development Set

Revisions

Date: 11.15.2015
Scale: AS NOTED
Job No.: 2394
Sheet No.: H1.4A

NOTES:
1. 3" FLUE AND 3" COMBUSTION AIR RISERS UP THRU ROOF. CONNECT TO GAS FURNACE IN UNIT.
2. 2" CONDENSATE (DRAIN), 2" HWS, AND 2" HWR RISERS UP AND DOWN. OFFSET RISERS IN CLOSET CEILING.

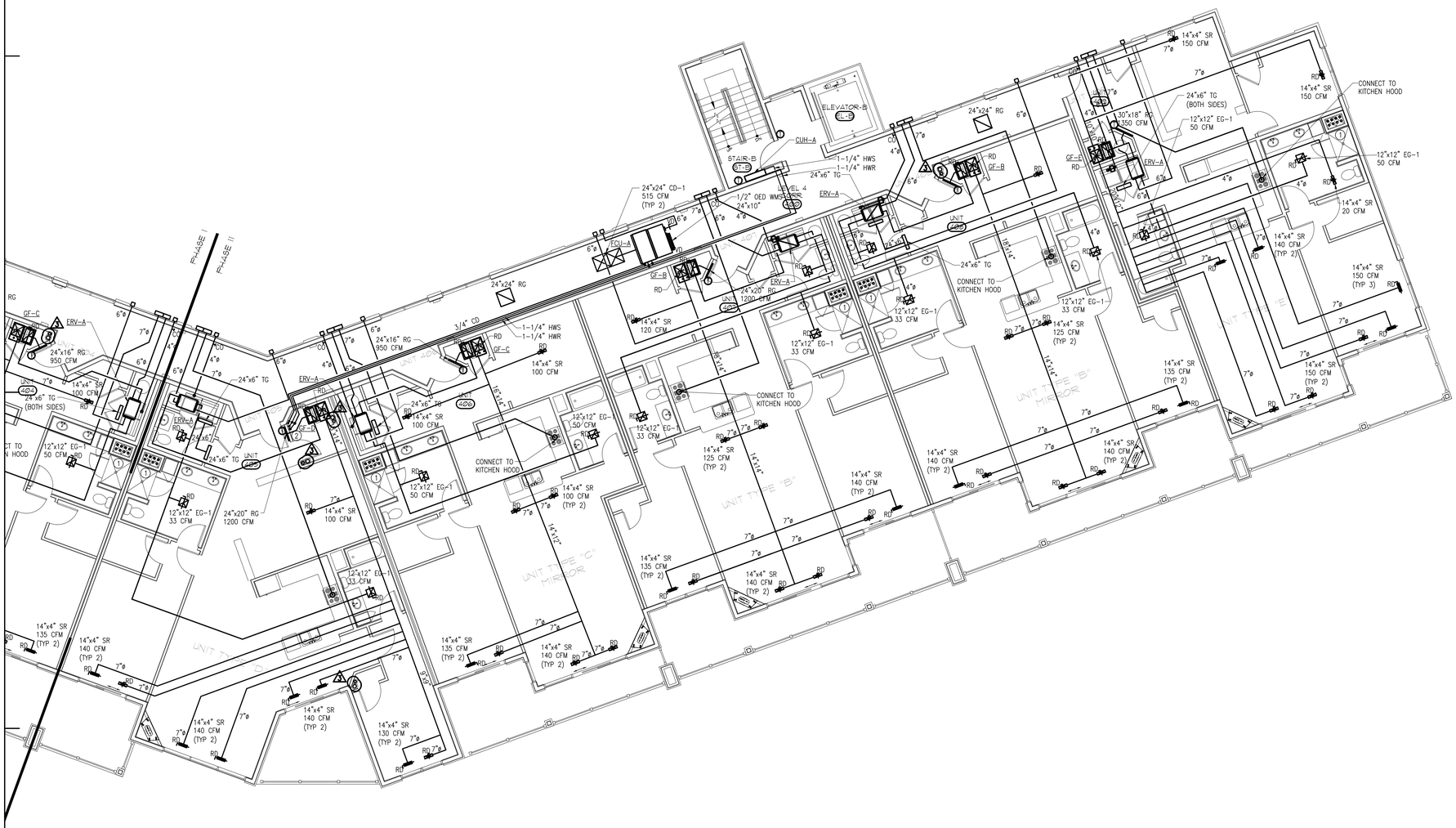

LEVEL 4 PART PLAN "B"

SCALE: 1/8"=1'-0"

1 / H1.4B

JD LaGrasse
Architects - Engineers - Interiors - Land Planning
One Elm Square, Andover, MA 01810
T: 978-470-3675 F: 978-470-3670
www.lagrassearchitects.com E-mail: JDLA@AOL.COM

BLW
BLW Engineers, Inc.
311 Great Road, Post Office Box 1551
Littleton, Massachusetts 01460
t: 978.486.4303 f: 978.828.0067
www.blwengineers.com
HVAC • Electrical • Plumbing • Fire Protection

STRUCTURAL ENGINEER: VEITAS & VEITAS ENGINEERS
CIVIL ENGINEER: MERIDIAN ASSOCIATES INC.
MEP: BLW ENGINEERS INC.

HATTERS POINT

AMESBURY, MA

prepared for: HATTERS POINT CAPITAL LLC.
location: PO BOX 1044 SUDBURY, MA 01776
title: HVAC LEVEL-4,PART-PLAN"B"

JDLA| 2015 ©
ALL PLANS, SPECIFICATIONS AND IDEAS ARE THE PROPERTY OF JDLA. RIGHTS OF USE ARE CONDITIONAL AND ARE GRANTED UNDER FULL COMPENSATION AND LIMITED TO A ONE-TIME USE TO CONSTRUCT A SINGLE PROJECT ON THE SITE SO INDICATED. USE OF THE WORK AND ANY DERIVATIVE WORK COVERED UNDER THIS COPYRIGHT FOR OTHER PROJECTS IS PROHIBITED. THE USE OR REPRODUCTION OF THESE PLANS, FOR ANY OTHER CONSTRUCTION OR PERMIT APPLICATION IS STRICTLY PROHIBITED WITHOUT PRIOR WRITTEN PERMISSION OF JDLA.

Mark	Date
–	Revision #5 – 01.15.16
2	ICC Review Comments
–	Permit Set
–	CD Pricing Set
–	Construction Docs Progress
–	Design Development Set

Revisions

Date	11.15.2015
Scale	AS NOTED
Job No.	2394
Sheet No.	H1.4B

NOTES:
1. 3" FLUE AND 3" COMBUSTION AIR RISERS UP THRU ROOF.
2. 2" CONDENSATE (DRAIN), 2" HWS, AND 2" HWR RISERS DOWN.

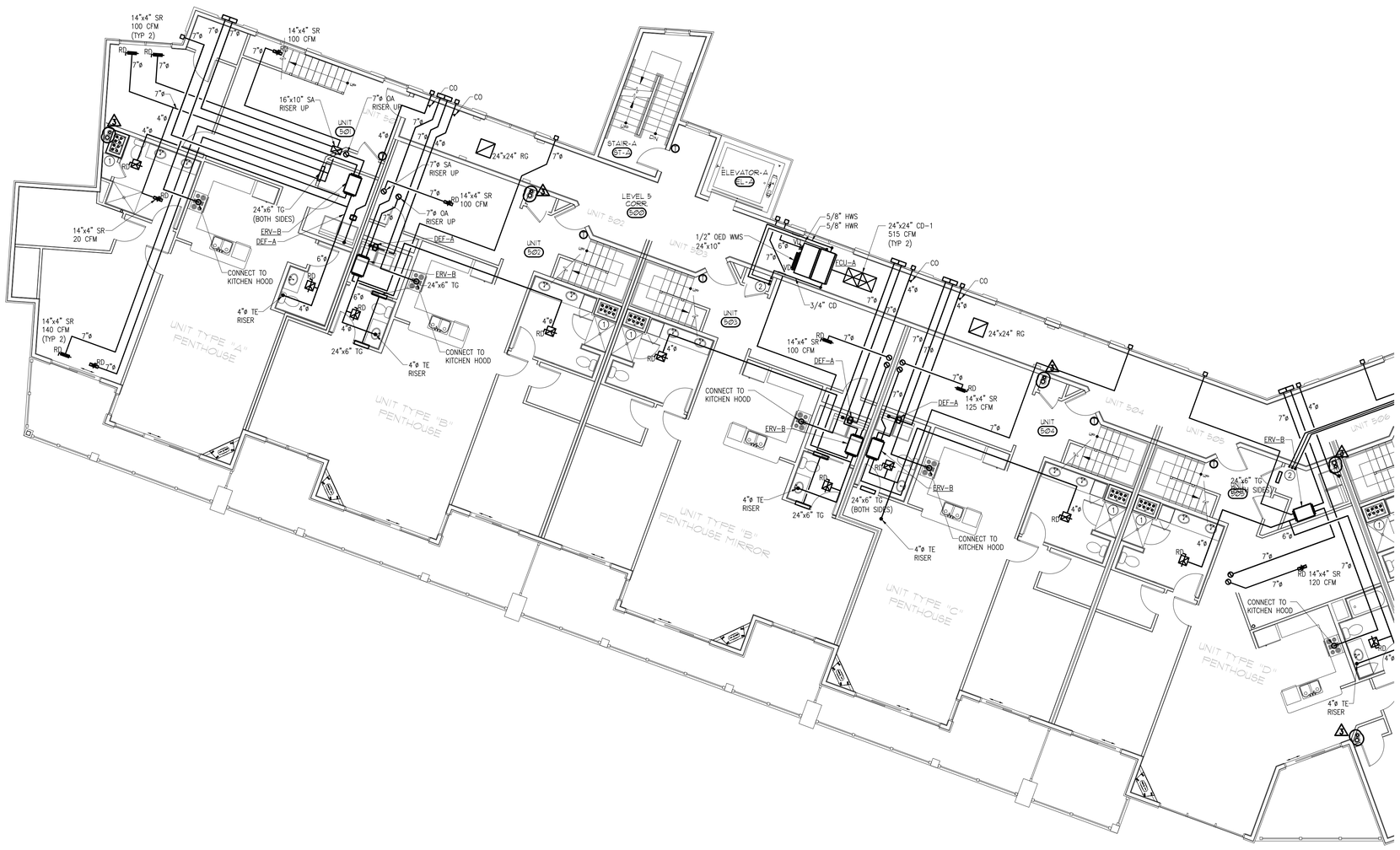

LEVEL 5 PART PLAN "A"
SCALE: 1/8"=1'-0"
H1.5A

JD LaGrasse
Architects - Engineers - Interiors - Land Planning
One Elm Square, Andover, MA 01810
T. 978-470-3675 F. 978-470-3670
www.lagrassearchitects.com E-mail: JDLA@AOL.COM

BLW
BLW Engineers, Inc.
311 Great Road, Post Office Box 1551
Littleton, Massachusetts 01460
t: 978.486.4303 f: 978.828.0067
www.blwengineers.com
HVAC • Electrical • Plumbing • Fire Protection

STRUCTURAL ENGINEER: VEITAS & VEITAS ENGINEERS
CIVIL ENGINEER: MERIDIAN ASSOCIATES INC.
MEP: BLW ENGINEERS INC.

HATTERS POINT

AMESBURY, MA

prepared for: HATTERS POINT CAPITAL LLC.
location: PO BOX 1044 SUDBURY, MA 01776
title: HVAC LEVEL-5,PART-PLAN"A"

JDLA| 2015 ©
ALL PLANS, SPECIFICATIONS AND IDEAS ARE THE PROPERTY OF JDLA. RIGHTS OF USE ARE CONDITIONAL AND ARE GRANTED UNDER FULL COMPENSATION AND LIMITED TO A ONE-TIME USE TO CONSTRUCT A SINGLE PROJECT ON THE SITE SO INDICATED. USE OF THE WORK AND ANY DERIVATIVE WORK COVERED UNDER THIS COPYRIGHT FOR OTHER PROJECTS IS PROHIBITED. THE USE OR REPRODUCTION OF THESE PLANS FOR ANY OTHER CONSTRUCTION OR PERMIT APPLICATION IS STRICTLY PROHIBITED WITHOUT PRIOR WRITTEN PERMISSION OF JDLA.

Mark	Date
–	Revision #5 – 01.15.16
2	ICC Review Comments
–	Permit Set
–	CD Pricing Set
–	Construction Docs Progress
–	Design Development Set

Revisions

Date: 11.15.2015
Scale: AS NOTED
Job No.: 2394
Sheet No.: H1.5A

NOTES:
1. 3" FLUE AND 3" COMBUSTION AIR RISERS UP THRU ROOF.
2. 2" CONDENSATE (DRAIN), 2" HWS, AND 2" HWR RISERS DOWN.

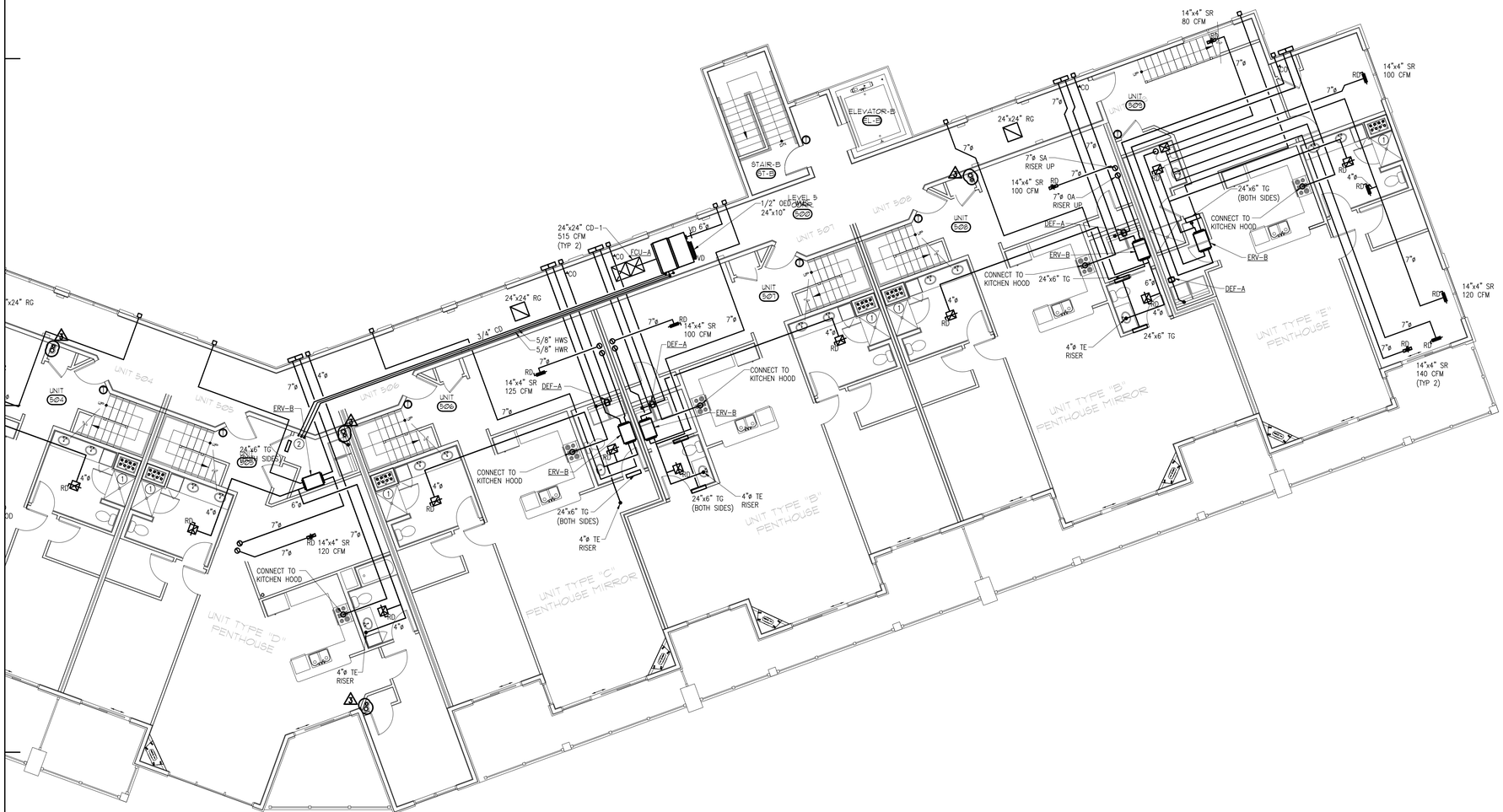

LEVEL 5 PART PLAN "B"

SCALE: 1/8"=1'-0"

H1.5B

JD LaGrasse
Architects - Engineers - Interiors - Land Planning
One Elm Square, Andover, MA 01810
T. 978-470-3675 F. 978-470-3670
www.lagrassearchitects.com E-mail: JDLA@AOL.COM

BLW
BLW Engineers, Inc.
311 Great Road, Post Office Box 1551
Littleton, Massachusetts 01460
t: 978.486.4303 f: 978.428.0067
www.blwengineers.com
HVAC • Electrical • Plumbing • Fire Protection

STRUCTURAL ENGINEER:
VEITAS & VEITAS ENGINEERS
CIVIL ENGINEER:
MERIDIAN ASSOCIATES INC.
MEP:
BLW ENGINEERS INC.

HATTERS POINT

AMESBURY, MA

prepared for: HATTERS POINT CAPITAL LLC.
location: PO BOX 1044 SUDBURY, MA 01776
title

HVAC
LEVEL-5,PART-PLAN"B"

JDLA| 2015 ©
ALL PLANS, SPECIFICATIONS AND IDEAS ARE THE PROPERTY OF JDLA. RIGHTS OF USE ARE CONDITIONAL AND ARE GRANTED UNDER FULL COMPENSATION AND LIMITED TO A ONE-TIME USE TO CONSTRUCT A SINGLE PROJECT ON THE SITE SO INDICATED. USE OF THE WORK AND ANY DERIVATIVE WORK COVERED UNDER THIS COPYRIGHT FOR OTHER PROJECTS IS PROHIBITED. THE USE OR REPRODUCTION OF THESE PLANS FOR ANY OTHER CONSTRUCTION OR PERMIT APPLICATION IS STRICTLY PROHIBITED WITHOUT PRIOR WRITTEN PERMISSION OF JDLA.

Mark	Date
–	Revision #5 – 01.15.16
2	ICC Review Comments
–	Permit Set
–	CD Pricing Set
–	Construction Docs Progress
–	Design Development Set

Revisions

Date 11.15.2015
Scale AS NOTED
Job No. 2394
Sheet No. H1.5B

NOTES:
1. 3" FLUE AND 3" COMBUSTION AIR RISERS UP THRU ROOF. CONNECT TO GAS FURNACE IN UNIT.
2. 3" FLUE AND 3" COMBUSTION AIR THRU ROOF.
3. GARAGE UNIT HEAT FLUE AND COMBUSTION AIR THRU ROOF.

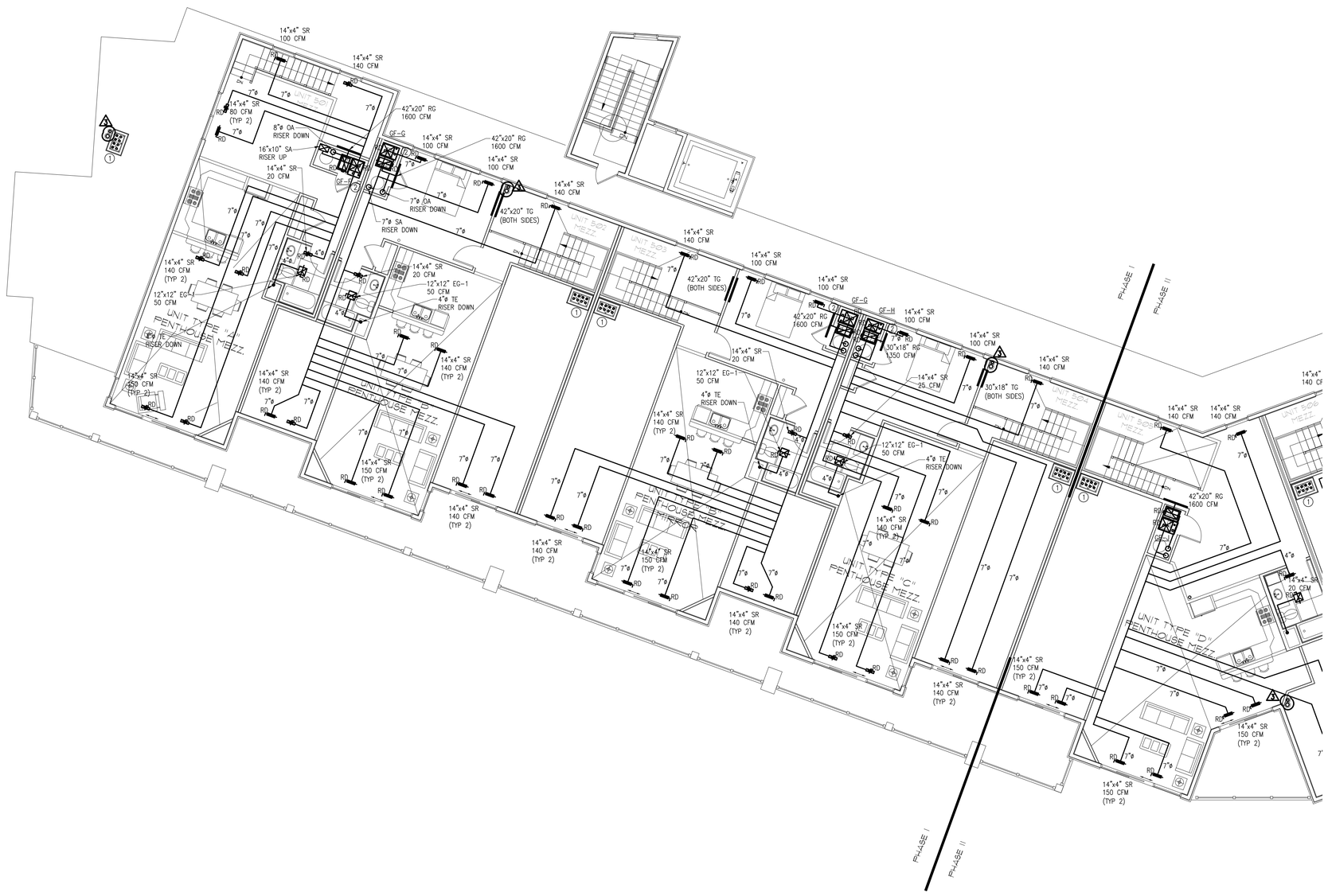

LEVEL 5M PART PLAN "A"
SCALE: 1/8"=1'-0"
H1.6A

JD LaGrasse
Architects - Engineers - Interiors - Land Planning
One Elm Square, Andover, MA 01810
T. 978-470-3675 F. 978-470-3670
www.lagrassearchitects.com E-mail: JDL@AOL.COM

BLW
BLW Engineers, Inc.
311 Great Road, Post Office Box 1551
Littleton, Massachusetts 01460
t: 978.486.4303 f: 978.428.0067
www.blwengineers.com
HVAC • Electrical • Plumbing • Fire Protection

STRUCTURAL ENGINEER: VEITAS & VEITAS ENGINEERS
CIVIL ENGINEER: MERIDIAN ASSOCIATES INC.
MEP: BLW ENGINEERS INC.

HATTERS POINT
AMESBURY, MA

prepared for: HATTERS POINT CAPITAL LLC.
location: PO BOX 1044 SUDBURY, MA 01776
title: HVAC LEVEL-5M,PART-PLAN"A"

JDLA| 2015 ©
ALL PLANS, SPECIFICATIONS AND IDEAS ARE THE PROPERTY OF JDLA. RIGHTS OF USE ARE CONDITIONAL AND ARE GRANTED UNDER FULL COMPENSATION AND LIMITED TO A ONE-TIME USE TO CONSTRUCT A SINGLE PROJECT ON THE SITE SO INDICATED. USE OF THE WORK AND ANY DERIVATIVE WORK COVERED UNDER THIS COPYRIGHT FOR OTHER PROJECTS IS PROHIBITED. THE USE OR REPRODUCTION OF THESE PLANS FOR ANY OTHER CONSTRUCTION OR PERMIT APPLICATION IS STRICTLY PROHIBITED WITHOUT PRIOR WRITTEN PERMISSION OF JDLA.

Mark	Date
–	Revision #5 – 01.15.16
2	ICC Review Comments
–	Permit Set
–	CD Pricing Set
–	Construction Docs Progress
–	Design Development Set

Revisions

Date: 11.15.2015
Scale: AS NOTED
Job No.: 2394
Sheet No.: H1.6A

NOTES:
1. 3" FLUE AND 3" COMBUSTION AIR RISERS UP THRU ROOF. CONNECT TO GAS FURNACE IN UNIT.
2. 2" CONDENSATE RISER DOWN.

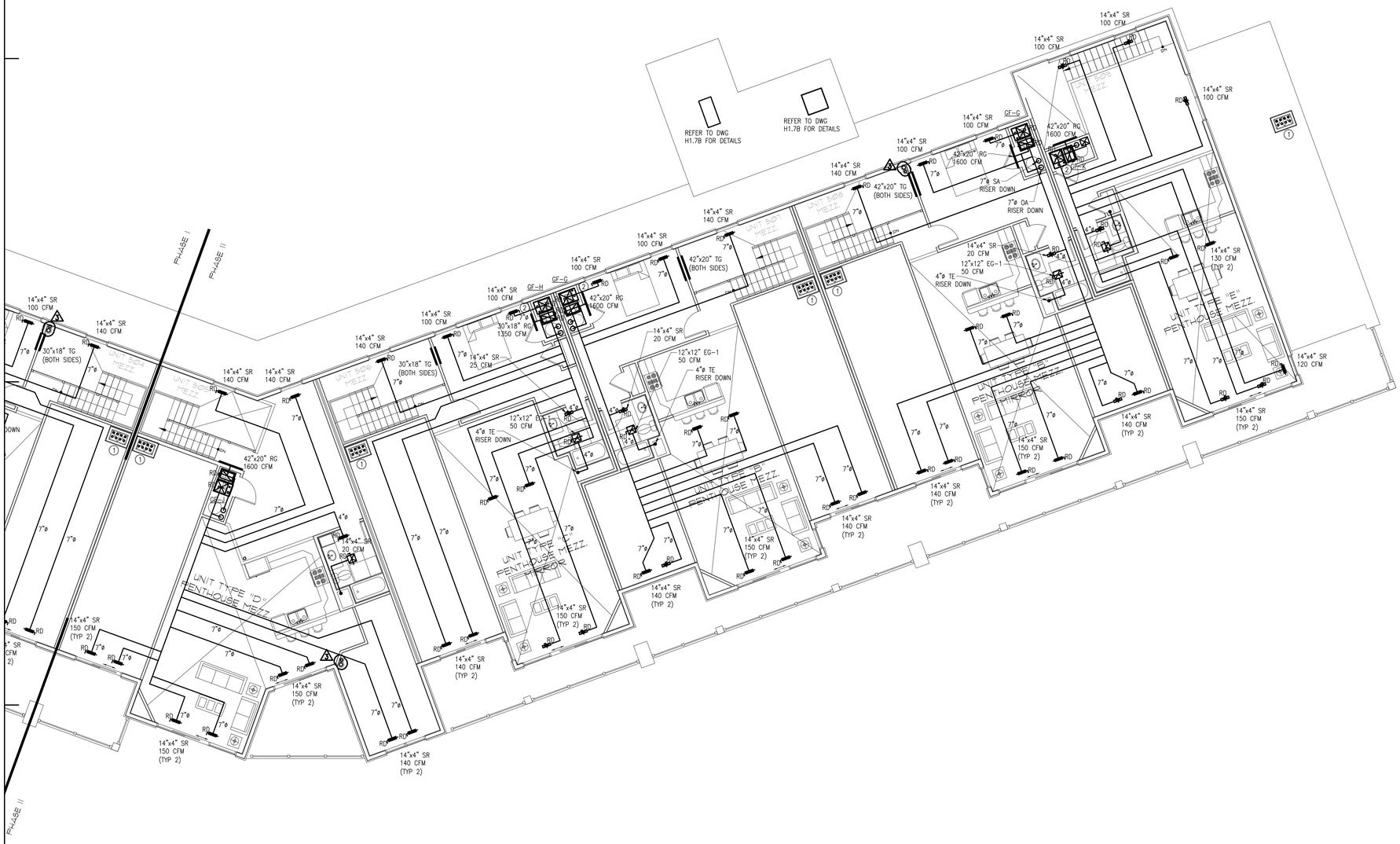

LEVEL 5M PART PLAN "B"

SCALE: 1/8"=1'-0"

H1.6B

CALLED NORTH

COMMONWEALTH OF MASSACHUSETTS
JOHN D. LAGIOIA
MECHANICAL
NO. 16449
REGISTERED PROFESSIONAL ENGINEER

JD LaGioia
Architects - Engineers - Interiors - Land Planning
One Elm Square, Andover, MA 01810
T. 978-470-3675 F. 978-470-3670
www.lagioiaarchitects.com E-mail: JDLA@AOL.COM

BLW
BLW Engineers, Inc.
311 Great Road, Post Office Box 1551
Littleton, Massachusetts 01460
t: 978.486.4303 f: 978.828.0067
www.blwengineers.com
HVAC • Electrical • Plumbing • Fire Protection

STRUCTURAL ENGINEER: VEITAS & VEITAS ENGINEERS
CIVIL ENGINEER: MERIDIAN ASSOCIATES INC.
MEP: BLW ENGINEERS INC.

HATTERS POINT

AMESBURY, MA

prepared for: HATTERS POINT CAPITAL LLC.
location: PO BOX 1044 SUDBURY, MA 01776
title: HVAC LEVEL-5M,PART-PLAN"B"

JDLA| 2015 ©
ALL PLANS, SPECIFICATIONS AND IDEAS ARE THE PROPERTY OF JDLA. RIGHTS OF USE ARE CONDITIONAL AND ARE GRANTED UNDER FULL COMPENSATION AND LIMITED TO A ONE-TIME USE TO CONSTRUCT A SINGLE PROJECT ON THE SITE SO INDICATED. USE OF THE WORK AND ANY DERIVATIVE WORK COVERED UNDER THIS COPYRIGHT FOR OTHER PROJECTS IS PROHIBITED. THE USE OR REPRODUCTION OF THESE PLANS FOR ANY OTHER CONSTRUCTION OR PERMIT APPLICATION IS STRICTLY PROHIBITED WITHOUT PRIOR WRITTEN PERMISSION OF JDLA.

Mark	Date
–	Revision #5 – 01.15.16
2	ICC Review Comments
–	Permit Set
–	CD Pricing Set
–	Construction Docs Progress
–	Design Development Set

Revisions

Date: 11.15.2015
Scale: AS NOTED
Job No.: 2394
Sheet No.: H1.6B

NOTES:
1. 3" FLUE AND 3" COMBUSTION AIR RISERS UP THRU ROOF. TERMINATE AT ROOF PER MANUFACTURER'S INSTRUCTIONS.
2. 3" FLUE AND 3" COMBUSTION AIR UP THRU ROOF. TERMINATE AT ROOF PER MANUFACTURER'S INSTRUCTIONS.
3. GARAGE UNIT HEAT FLUE AND COMBUSTION AIR THRU ROOF.

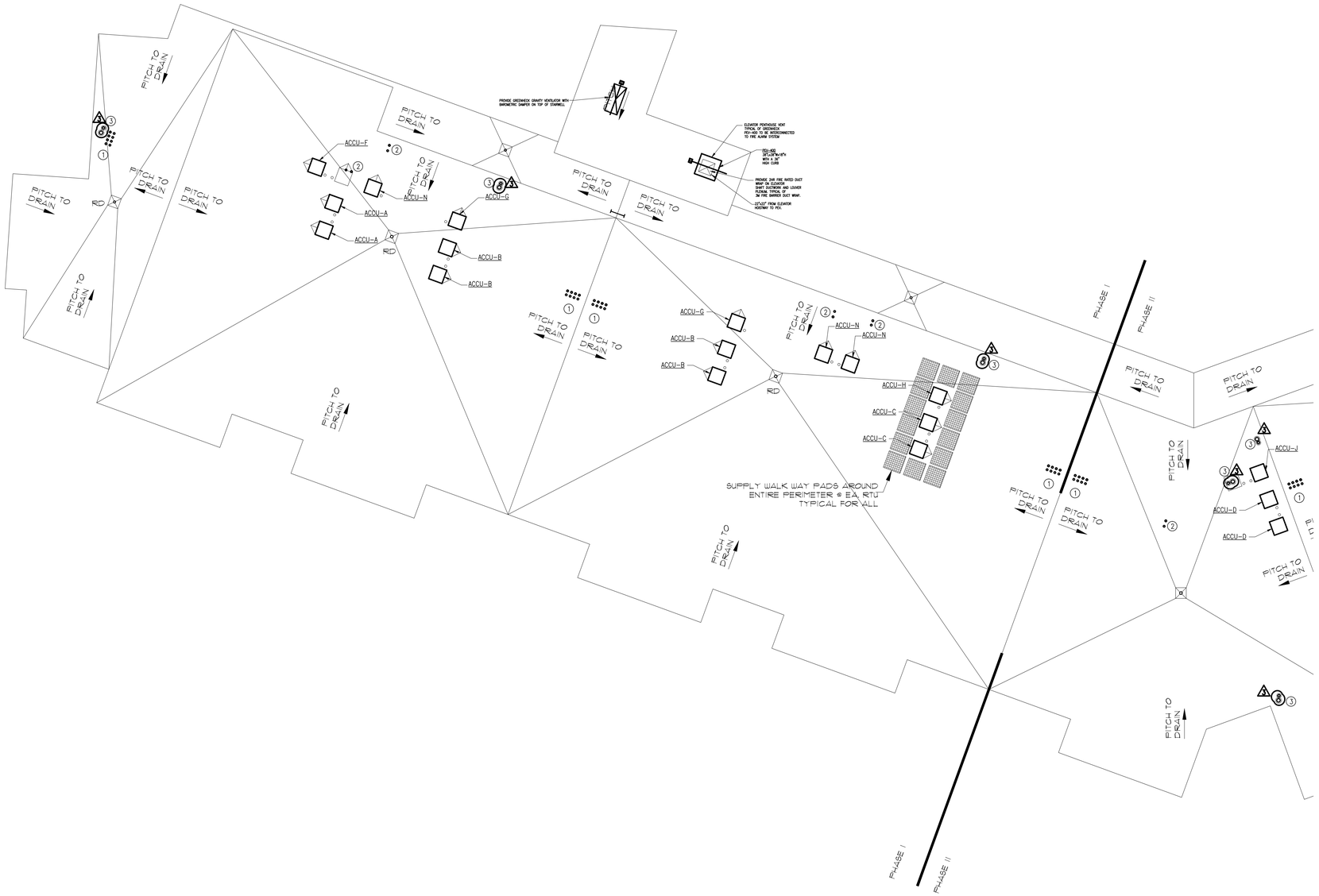

ROOF PART PLAN "A"
SCALE: 1/8"=1'-0"
H1.7A

JD LaGrasse
Architects - Engineers - Interiors - Land Planning
One Elm Square, Andover, MA 01810
T. 978-470-3675 F. 978-470-3670
www.jdlagrassearchitects.com E-mail: JDLA@AOL.COM

BLW
BLW Engineers, Inc.
311 Great Road, Post Office Box 1551
Littleton, Massachusetts 01460
t: 978.486.4303 f: 978.828.0067
www.blwengineers.com
HVAC • Electrical • Plumbing • Fire Protection

STRUCTURAL ENGINEER: *VEITAS & VEITAS ENGINEERS*
CIVIL ENGINEER: *MERIDIAN ASSOCIATES INC.*
MEP: *BLW ENGINEERS INC.*

HATTERS POINT
AMESBURY, MA

prepared for: HATTERS POINT CAPITAL LLC.
location: PO BOX 1044 SUDBURY, MA 01776
title: HVAC ROOF,PART-PLAN"A"

JDLA| 2015 ©
ALL PLANS, SPECIFICATIONS AND IDEAS ARE THE PROPERTY OF JDLA. RIGHTS OF USE ARE CONDITIONAL AND ARE GRANTED UNDER FULL COMPENSATION AND LIMITED TO A ONE-TIME USE TO CONSTRUCT A SINGLE PROJECT ON THE SITE SO INDICATED. USE OF THE WORK AND ANY DERIVATIVE WORK COVERED UNDER THIS COPYRIGHT FOR OTHER PROJECTS IS PROHIBITED. THE USE OR REPRODUCTION OF THESE PLANS, FOR ANY OTHER CONSTRUCTION OR PERMIT APPLICATION IS STRICTLY PROHIBITED WITHOUT PRIOR WRITTEN PERMISSION OF JDLA.

Mark	Date
–	Revision #5 – 01.15.16
2	ICC Review Comments
–	Permit Set
–	CD Pricing Set
–	Construction Docs Progress
–	Design Development Set

Revisions

Date: 11.15.2015
Scale: AS NOTED
Job No.: 2394
Sheet No.: H1.7A

NOTES:
1. 3" FLUE AND 3" COMBUSTION AIR RISERS UP THRU ROOF. TERMINATE AT ROOF PER MANUFACTURER'S INSTRUCTIONS.
2. 3" FLUE AND 3" COMBUSTION AIR UP THRU ROOF. TERMINATE AT ROOF PER MANUFACTURER'S INSTRUCTIONS.
3. GARAGE UNIT HEAT FLUE AND COMBUSTION AIR THRU ROOF.

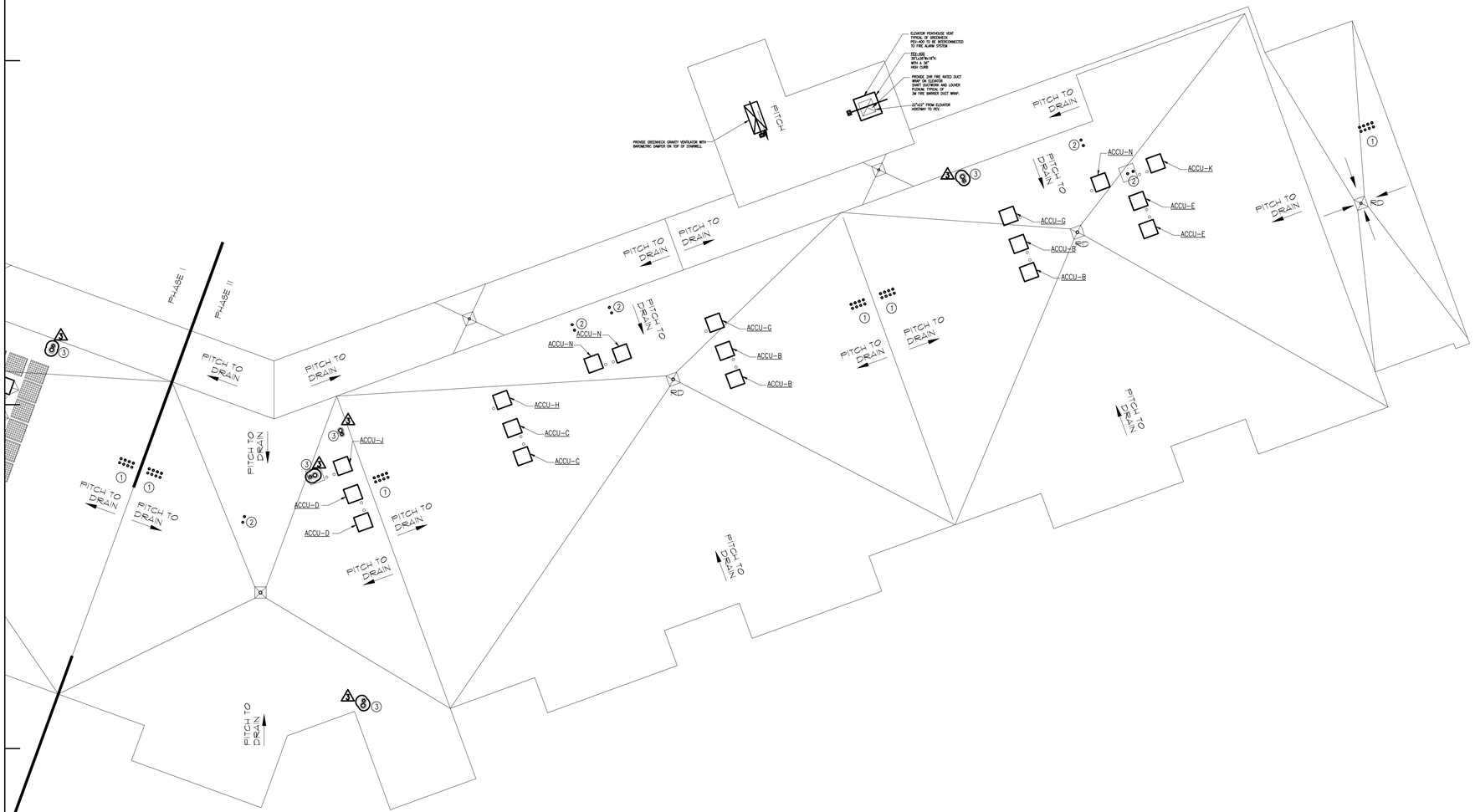

ROOF PART PLAN "B"

SCALE: 1/8"=1'-0"

1 / H1.7B

JD LaGrasse
Architects - Engineers - Interiors - Land Planning
One Elm Square, Andover, MA 01810
T: 978-470-3675 F: 978-470-3670
www.lagrassearchitects.com E-mail: JDLA@AOL.COM

BLW
BLW Engineers, Inc.
311 Great Road, Post Office Box 1551
Littleton, Massachusetts 01460
t: 978.486.4303 f: 978.828.0067
www.blwengineers.com
HVAC • Electrical • Plumbing • Fire Protection

STRUCTURAL ENGINEER: VEITAS & VEITAS ENGINEERS
CIVIL ENGINEER: MERIDIAN ASSOCIATES INC.
MEP: BLW ENGINEERS INC.

HATTERS POINT

AMESBURY, MA

prepared for: HATTERS POINT CAPITAL LLC.
location: PO BOX 1044 SUDBURY, MA 01776
title: HVAC ROOF,PART-PLAN"B"

JDLA| 2015 ©
ALL PLANS, SPECIFICATIONS AND IDEAS ARE THE PROPERTY OF JDLA. RIGHTS OF USE ARE CONDITIONAL AND ARE GRANTED UNDER FULL COMPENSATION AND LIMITED TO A ONE-TIME USE TO CONSTRUCT A SINGLE PROJECT ON THE SITE SO INDICATED. USE OF THE WORK AND ANY DERIVATIVE WORK COVERED UNDER THIS COPYRIGHT FOR OTHER PROJECTS IS PROHIBITED. THE USE OR REPRODUCTION OF THESE PLANS FOR ANY OTHER CONSTRUCTION OR PERMIT APPLICATION IS STRICTLY PROHIBITED WITHOUT PRIOR WRITTEN PERMISSION OF JDLA.

Mark	Date
–	Revision #5 – 01.15.16
2	ICC Review Comments
–	Permit Set
–	CD Pricing Set
–	Construction Docs Progress
–	Design Development Set

Revisions

Date	11.15.2015
Scale	AS NOTED
Job No.	2394
Sheet No.	H1.7B