PHOTOVOLTAIC MODULE GROUND MOUNT SYSTEM

RBI SOLAR RACK MODEL: GM-I

FOR

SunEdison®

AT

TITCOMB LANDFILL
SOUTH HUNT RD RTE 150
AMESBURY, MA 01913

SYMBOLS LEGEND

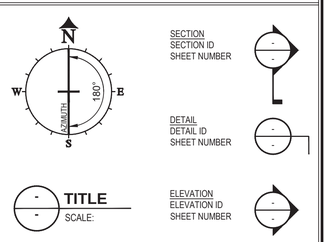

GOVERNING CODE

IBC 2009 / MASSACHUSETTS 780 CMR 8th EDITION

DESIGN LOADS:

1. DEAD LOADS:
   - STRUCTURE: 2.0 PSF
   - GLAZING: 3.0 PSF
   - Σ = 5.0 PSF
2. ROOF LIVE LOAD = 0 PSF
3. SNOW LOAD:
   - P_g = 50.0 PSF (GROUND SNOW)
   - P_f = 33.6 PSF (FLAT ROOF SNOW)
   - P_s = 28.7 PSF (SLOPED ROOF SNOW)
   - C_e = 1.00
   - C_t = 1.20
   - C_s = 0.91
   - I_s = 0.80
4. WIND LOAD: (MAIN WIND FORCE RESISTING SYSTEM)
   - V = 105 MPH
   - BUILDING CATEGORY: I
   - I_w = 0.77
   - EXPOSURE: C
5. SEISMIC:
   - S_s = 0.031
   - S_1 = 0.071
   - S_{ds} = 0.321
   - S_{d1} = 0.114
   - OCCUPANCY CATEGORY: I
   - I_{eq} = 1.00
   - SITE CLASS: D
   - SEISMIC DESIGN CATEGORY: B
   - SEISMIC FORCE RESISTING SYSTEM = CANTILEVERED COLUMN SYSTEM
   - DESIGN BASE SHEAR: V = 0.128 W; C_s = 0.128; R = 2.5
   - EQUIVALENT LATERAL FORCE ANALYSIS

SITE PLAN OVERLAY

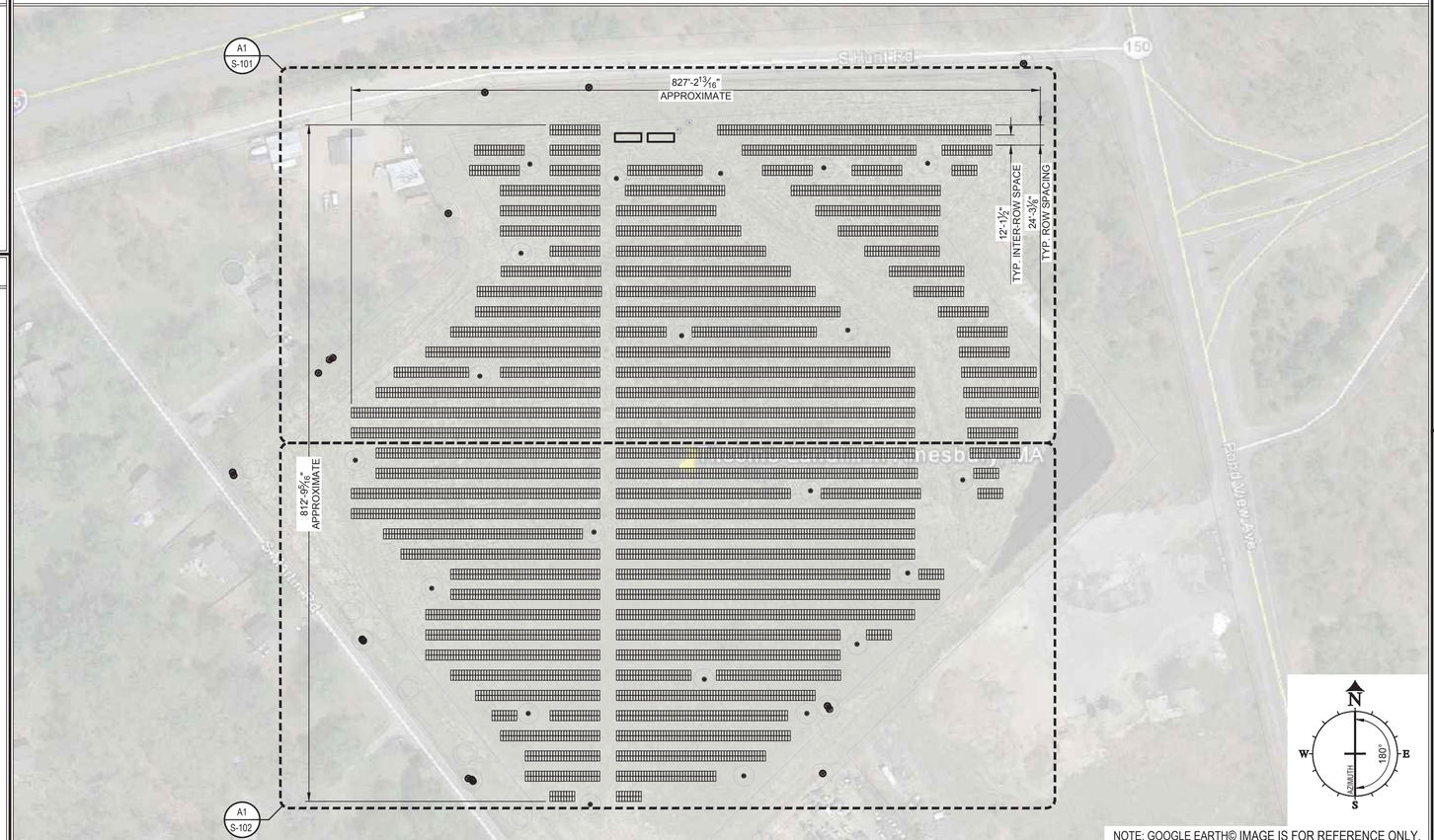

NOTE: GOOGLE EARTH© IMAGE IS FOR REFERENCE ONLY.

SHEET INDEX

SHEET	SHEET DESCRIPTION
G-001	COVER SHEET
G-002	GENERAL NOTES/MODULE SPECIFICATION SHEETS
S-101	COMPONENT LAYOUT "A"
S-102	COMPONENT LAYOUT "B"
S-301	RACK SECTION & BAY PLAN VIEWS
S-302	BALLAST BLOCK DETAILS & SCHEDULE
S-501	DETAILS

SYSTEM SPECIFICATIONS

NOTE:
THIS SUBMITTAL/CONSTRUCTION SET WAS PRODUCED FROM DOCUMENTS RECEIVED FROM CUSTOMER ON 1/06/16.

PV MODULE MFR.	TRINA SOLAR
PV MODULE MODEL #	TSM-PD14 315W
# OF ACTIVE PV MODULES	9864
# OF SPARE PV MODULES	0
TOTAL # OF PV MODULES	9864
TOTAL PV SYSTEM WATTS	3.107 MW DC
ARRAY TYPE	FIXED TILT
ARRAY TILT	20°
TOTAL # OF BALLAST	1171
ARRAY ROW SPACING	24'-3 1/8"
INTER-ROW SPACE	12'-1 1/2"
MINIMUM MODULE CLEARANCE	2'-6"
ARRAY AZIMUTH	180° (NOT ADJUSTED FOR MAGNETIC DECLINATION)

RBI SOLAR
Total Solar Service: Design * Fabrication
Installation * Parts * Repair Service
5513 VINE STREET
CINCINNATI, OH 45217
513.242.2051
FAX: 513.242.0816

PROFESSIONAL SEAL

ENGINEER'S SEAL APPLIES TO DESIGN OF STRUCTURAL COMPONENTS ONLY

COMMONWEALTH OF MASSACHUSETTS
MOHAMED A. ALY
STRUCTURAL
No. 50028
REGISTERED PROFESSIONAL ENGINEER

GROUND MOUNT FOR SunEdison®

RELEASE RECORD

MARK	DATE	DESCRIPTION
4	1/20/16	100% SEALED SET
3	1/20/16	90% SET
2	1/13/16	PERMIT SET
1	1/11/16	PRELIMINARY REVIEW

PROJECT INFORMATION

TITLE & ADDRESS:
TITCOMB LANDFILL
SOUTH HUNT RD RTE 150
AMESBURY, MA 01913

RBI SOLAR PROJECT No.: 153871

DRAWN BY: EDM
REVIEWED BY: AW/BDS

SHEET TITLE: COVER SHEET

SHEET No.: **G-001**

The drawings and data in this document, and the intellectual property and confidential information it contains, are the property of RBI Solar, Inc. 5513 Vine Street, Cincinnati, Ohio, 45217. Any party accepting this document does so in confidence and agrees that it shall not be duplicated, in whole or in part, nor disclose to others without the written consent of RBI Solar, Inc.®

USER: AWOLKE PLOTTED: 1/21/2016 - 10:00 AM S:\RBI Solar\Design\2015 Jobs\153871-SunEdison-Titcomb Landfill - Amesbury MA\Drawings\153871 - Titcomb Landfill (012016 AW).dwg LAYOUT: G-001

MODULE SPECIFICATION SHEETS

Mono **Multi** Solutions

THE TALLMAX MODULE

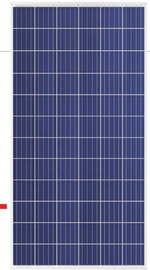

72 CELL
MULTICRYSTALLINE MODULE

305-315W
POWER OUTPUT RANGE

16.2%
MAXIMUM EFFICIENCY

0~+5W
POSITIVE POWER TOLERANCE

As a leading global manufacturer of next generation photovoltaic products, we believe close cooperation with our partners is critical to success. With local presence around the globe, Trina is able to provide exceptional service to each customer in each market and supplement our innovative, reliable products with the backing of Trina as a strong, bankable partner. We are committed to building strategic, mutually beneficial collaboration with installers, developers, distributors and other partners as the backbone of our shared success in driving Smart Energy Together.

Trina Solar Limited
www.trinasolar.com

Ideal for large scale installations
- High powerful footprint reduces installation time and BOS costs
- 1000V UL/1000V IEC certified

One of the industry's most trusted modules
- Field proven performance

Highly reliable due to stringent quality control
- Over 30 in-house tests (UV, TC, HF, and many more)
- In-house testing goes well beyond certification requirements
- PID resistant

Certified to withstand challenging environmental conditions
- 2400 Pa wind load
- 5400 Pa snow load
- 25 mm hail stones at 82 km/h

LINEAR PERFORMANCE WARRANTY
10 Year Product Warranty • 25 Year Linear Power Warranty

Trinasolar
Smart Energy Together

THE TALLMAX MODULE — TSM-PD14

DIMENSIONS OF PV MODULE
unit:mm/in

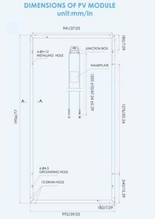

Back View

I-V CURVES OF PV MODULE(310W)

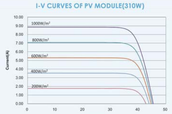

ELECTRICAL DATA (STC)

Peak Power Watts-P_{MAX} (Wp)	305	310	315
Power Output Tolerance-P_{MAX} (W)		0 ~ +5	
Maximum Power Voltage-V_{MP} (V)	36.6	37.0	37.1
Maximum Power Current-I_{MPP} (A)	8.33	8.38	8.51
Open Circuit Voltage-V_{OC} (V)	45.5	45.5	45.6
Short Circuit Current-I_{SC} (A)	8.81	8.85	9.00
Module Efficiency η_m (%)	15.7	16.0	16.2

STC: Irradiance 1000 W/m², Cell Temperature 25°C, Air Mass AM1.5 according to EN 60904-3.
Typical efficiency reduction of 4.5% at 200 W/m² according to EN 60904-1.

ELECTRICAL DATA (NOCT)

Maximum Power-P_{MAX} (Wp)	227	230	234
Maximum Power Voltage-V_{MP} (V)	34.0	34.3	34.3
Maximum Power Current-I_{MPP} (A)	6.68	6.72	6.83
Open Circuit Voltage-V_{OC} (V)	42.2	42.2	42.3
Short Circuit Current-I_{SC} (A)	7.11	7.15	7.27

NOCT: Irradiance at 800 W/m², Ambient Temperature 20°C, Wind Speed 1 m/s.

MECHANICAL DATA

Solar cells	Multicrystalline 156 × 156 mm (6 inches)
Cell orientation	72 cells (6 × 12)
Module dimensions	1956 × 992 × 40 mm(77× 39.05 × 1.57 inches)
Weight	22.5 kg (49.6lb)
Glass	3.2 mm,High Transmission, AR Coated Tempered Glass
Backsheet	White
Frame	Silver Anodized Aluminium Alloy
J-Box	IP 65 or IP 67 rated
Cables	Photovoltaic Technology cable 4.0mm² (0.006 inches²), 1200mm (47.2 inches)
Connector	UTX Ampherol
Fire Type	Type 8

TEMPERATURE RATINGS

Nominal Operating Cell Temperature (NOCT)	44°C (±2°C)
Temperature Coefficient of P_{MAX}	- 0.41%/°C
Temperature Coefficient of V_{OC}	- 0.32%/°C
Temperature Coefficient of I_{SC}	0.05%/°C

MAXIMUM RATINGS

Operational Temperature	-40~+85°C
Maximum System Voltage	1000VDC (IEC) 1000VDC(UL)
Max Series Fuse Rating	15A

WARRANTY
- 10 year Product Workmanship Warranty
- 25 year Linear Power Warranty

(Please refer to product warranty for details)

PACKAGING CONFIGURATION
- Modules per box: 26 pieces
- Modules per 40' container: 572 pieces

CERTIFICATION

TSM_EN_2015_B

Trinasolar
Smart Energy Together

CAUTION: READ SAFETY AND INSTALLATION INSTRUCTIONS BEFORE USING THE PRODUCT.
© 2015 Trina Solar Limited. All rights reserved. Specifications included in this datasheet are subject to change without notice.

GENERAL NOTES

GENERAL/CONSTRUCTION/SAFETY:

1. ALL WORK SHALL CONFORM TO THE REQUIREMENTS OF THE APPLICABLE CONSTRUCTION CODE AND THE PROJECT SPECIFICATIONS.
2. LOCATION OF UNDERGROUND UTILITIES SHALL BE VERIFIED PRIOR TO COMMENCEMENT OF CONSTRUCTION.
3. DIMENSIONS SHOWN ON PLAN SHALL BE VERIFIED IN FIELD.
4. LAYOUT IS SUBJECT TO CHANGE PER REQUEST AND/OR EXISTING CONDITIONS IN THE FIELD.
5. ENGINEER SHALL NOT BE RESPONSIBLE FOR THE MEANS, METHODS, TECHNIQUES, SEQUENCES OR PROCEDURES OF CONSTRUCTION SELECTED BY CONTRACTOR.
6. CONTRACTOR SHALL FIELD MEASURE AND VERIFY ALL EXISTING CONDITIONS AND DIMENSIONS. ANY UNEXPECTED CONDITIONS OR DISCREPANCIES WITH THE DESIGN DOCUMENTS SHALL BE REPORTED TO THE ENGINEER PRIOR TO INSTALLATION OR ERECTION OF MATERIALS.
7. THE CONTRACTOR WILL BE SOLELY AND COMPLETELY RESPONSIBLE FOR CONDITIONS OF THE JOB SITE INCLUDING SAFETY OF ALL PERSONS AND PROPERTY DURING PERFORMANCE OF THE WORK. THIS REQUIREMENT WILL APPLY CONTINUOUSLY AND NOT BE LIMITED TO NORMAL WORKING HOURS. WHEN ON SITE, THE ENGINEER IS RESPONSIBLE FOR HIS OWN SAFETY BUT HAS NO RESPONSIBILITY FOR THE SAFETY OF OTHER PERSONNEL OR SAFETY CONDITIONS AT THE SITE.
8. NO PERSONNEL SHALL STEP OR STAND ON PHOTOVOLTAIC (PV) MODULES (SOLAR PANELS) AT ANY TIME. RACK STRUCTURE AND PV MODULES ARE NOT DESIGNED FOR LIVE LOADS AND MAY VOID WARRANTY.
9. THIS RBI SOLAR CONSTRUCTION SET IS DESIGNED FROM PV MODULE DATA SHEET(S) PROVIDED BY THE CUSTOMER. CUSTOMER IS RESPONSIBLE FOR VERIFYING THAT THE PV MODULE(S) DELIVERED TO SITE MATCH DATA SHEET(S) PROVIDED TO RBI SOLAR. RBI SOLAR IS NOT RESPONSIBLE FOR PV MODULE DIMENSIONAL DISCREPANCIES DUE TO FURNISHED PV MODULES NOT MATCHING CUSTOMER FURNISHED PV MODULE DATA SHEETS.

SPECIAL FIELD INSPECTION:

SPECIAL INSPECTION NOT REQUIRED BY RBI SOLAR. AS REQUIRED BY OWNER/CUSTOMER AND/OR AUTHORITY HAVING JURISDICTION, MINIMUM INSPECTION SHALL INCLUDE THE FOLLOWING NOTES AND TABLE:

1. ALL SPECIAL INSPECTORS SHALL BE RETAINED BY OWNER/CUSTOMER. THE EXTENT OF THE INSPECTION SHALL COMPLY WITH THE CONTRACT DOCUMENTS, THE BUILDING CODE REQUIREMENTS, AND LOCAL JURISDICTION. IT IS THE OWNER/CUSTOMER'S RESPONSIBILITY TO GIVE PROPER NOTIFICATION TO THE SPECIAL INSPECTOR AND PROCEED WITH THE WORK ONLY AFTER THE SPECIAL INSPECTOR'S APPROVAL.
2. FAILURE TO NOTIFY THE SPECIAL INSPECTOR MAY RESULT IN OWNER/CUSTOMER HAVING TO REMOVE WORK FOR THE PURPOSE OF INSPECTION AT THE OWNER'S/CUSTOMER'S EXPENSE.
3. PREMATURE NOTIFICATION FOR INSPECTION WILL RESULT IN AN ADDITIONAL INSPECTION WITH ALL EXPENSES AND FEES PAID BY THE OWNER/CUSTOMER.
4. SPECIAL INSPECTORS SHALL KEEP RECORDS OF ALL INSPECTIONS. RECORDS SHALL BE FURNISHED TO THE OWNER, ENGINEER OF RECORD, AND LOCAL JURISDICTION AS REQUIRED. ANY AND ALL DISCREPANCIES SHALL IMMEDIATELY BE BROUGHT TO THE ATTENTION OF THE CONTRACTOR. CORRECTIONS SHALL BE MADE AND A FINAL REPORT OF INSPECTIONS SHALL BE PROVIDED NOTING COMPLETION OF INSPECTIONS AND CORRECTIONS OF DISCREPANCIES. FAILURE TO CORRECT DISCREPANCIES SHALL BE REPORTED TO THE ENGINEER OF RECORD AND THE LOCAL JURISDICTION AND MAY RESULT IN REMOVAL OF COMPLETED WORK AND ADDITIONAL WORK TO CORRECT DISCREPANCIES AT THE CONTRACTOR'S EXPENSE.

IBC TABLE 1705		
STRUCTURAL STEEL/ALUMINUM FABRICATION	CONTINUOUS	PERIODIC
MATERIAL IDENTIFICATION		X
HIGH STRENGTH BOLTS - MATERIAL IDENTIFICATION OF BOLTS, NUTS AND WASHERS		X
WELD FILLER MATERIALS - IDENTIFICATION AND CONFIRMATION OF COMPLIANCE WITH DESIGN DOCUMENTS		X
STRUCTURAL STEEL/ALUMINUM ERECTION		
MATERIAL IDENTIFICATION		X
INSTALLATION OF HIGH STRENGTH BOLTS		X
WELDED CONNECTIONS		X
MEMBER SIZES AND PLACEMENT		X
GENERAL CONFORMANCE WITH DESIGN DOCUMENTS		X
CONCRETE CONSTRUCTION		
MATERIAL IDENTIFICATION		X
MIX DESIGN VERIFICATION		X
SIZE AND PLACEMENT OF REINFORCING STEEL		X
PLACEMENT OF CONCRETE USING PROPER TECHNIQUES		X
CONCRETE SAMPLES FOR SLUMP, AIR CONTENT, TEMPERATURE, STRENGTH TESTS, ETC. IN ACCORDANCE WITH ACI 318		X
PROPER MAINTENANCE OF SPECIFIED CURING TEMPERATURE AND TECHNIQUES		X
FOUNDATIONS		
SIZE AND LOCATION OF FOUNDATION EXCAVATIONS		X
PLACEMENT OF REINFORCING STEEL AS REQUIRED		X

WORK BY OTHERS:

1. SITE WORK AND DEVELOPMENT.
2. ALL ELECTRICAL WORK INCLUDING WIRING, CONDUIT, PANELS AND LIGHTS TO BE FURNISHED AND INSTALLED BY ELECTRICAL CONTRACTOR.
3. GROUNDING REQUIREMENTS.
4. ALL SHADING ANALYSIS AND/OR PRODUCTION ANALYSIS SHALL BE PERFORMED AND VERIFIED BY OTHERS. RBI SOLAR IS NOT RESPONSIBLE FOR PV SYSTEM DESIGN AS IT PERTAINS TO ELECTRICAL OR PV SYSTEM PRODUCTION.

STRUCTURAL STEEL:

1. ALL STRUCTURAL STEEL SHALL BE DESIGNED, FABRICATED AND ERECTED IN ACCORDANCE WITH THE LATEST VERSION OF AISC "MANUAL OF STEEL CONSTRUCTION." LIGHT GAGE COLD-FORMED SECTIONS SHALL CONFORM TO LATEST VERSION OF AISI SPECIFICATIONS FOR COLD-FORMED STEEL STRUCTURAL MEMBERS.
2. MATERIALS:
   - A. ROLLED SHAPES: ASTM A992 OR A572 GRADE 50, F_Y = 50 KSI MINIMUM
   - B. PLATES: ASTM A36
   - C. TUBULAR SHAPES: ASTM A500 GRADE B, F_Y = 50 KSI MINIMUM
   - D. FIELD BOLTS (TYP. U.N.O): SAE J429 GRADE 5
   - E. SCREWS: #12 TEKS - GALVANIZED
3. TEK SCREWS ARE TO BE INSTALLED USING A 2500 RPM MAX. NON-IMPACTING VARIABLE SPEED DRILL WITH CLUTCH OUT.
4. REFER TO THE RBI SOLAR MANUAL "GROUND MOUNT SYSTEM MODEL GM-I ASSEMBLY INSTRUCTIONS", VERSION 11, FOR STRUCTURAL CONNECTION TORQUE VALUES.
5. ALL WELDING OF STEEL SHALL BE DONE IN ACCORDANCE WITH THE LATEST VERSION OF THE AMERICAN WELD SOCIETY'S SPECIFICATIONS - AWS D1.1. ELECTRODES SHALL BE E70 SERIES UNLESS NOTED OTHERWISE.
6. GALVANIZING SPECIFICATIONS - GALVANIZING SHALL BE PER CONTRACT DOCUMENTS
   - A. HOT-DIPPED GALVANIZING SHALL BE PER ASTM A123.
   - B. PRE-GALVANIZED MATERIALS SHALL COMPLY WITH ASTM A653 - G90 MINIMUM.
   - C. ALL STRUCTURAL HARDWARE (NOT MODULE MOUNTING HARDWARE) SHALL BE GALVANIZED.

MISCELLANEOUS FASTENER NOTES:

1. ALL BOLTS SHALL BE THE TYPE AND SIZE INDICATED ON DRAWINGS.
2. ALL HARDWARE USED FOR MOUNTING PV MODULES SHALL BE STAINLESS STEEL.
3. ALL PV MODULE MOUNTING HARDWARE SHALL BE INSTALLED AND TORQUED PER MODULE MANUFACTURER'S RECOMMENDATIONS. CONNECTIONS USING WEEB BONDING WASHERS SHALL BE PER RBI INSTALLATION MANUAL - MINIMUM OF 12 FT-LBS FOR 5/16" MOUNTING HARDWARE AND 6 FT-LBS FOR 1/4" MOUNTING HARDWARE.

FOUNDATION/CONCRETE NOTES:

1. THE FOUNDATION DESIGN IS BASED ON ASSUMED VALUES.
2. CONCRETE SPECIFICATIONS:
   CONCRETE STRENGTH: 2500 PSI @ 28 DAYS — AIR CONTENT: 4-6%
   MINIMUM COVER: AS NOTED OR 3" ADJACENT TO EARTH — AGGREGATE SIZE: 3/4" MAXIMUM
3. CUSTOMER IS RESPONSIBLE FOR VERIFYING SOIL CONDITIONS ARE CONSISTENT WITH FINDINGS INCLUDED IN GEOTECHNICAL REPORT, IF APPLICABLE, AND/OR FIELD TESTS PERFORMED BY RBI SOLAR. VARIATIONS IN SOIL CONDITIONS SHALL BE REPORTED TO GEOTECHNICAL ENGINEER AND/OR ENGINEER OF RECORD RESPONSIBLE FOR FOUNDATION DESIGN PRIOR TO INSTALLATION OF ANY FOUNDATION MATERIALS.
4. CUSTOMER IS RESPONSIBLE FOR VERIFYING CORROSION COMPATIBILITY WITH FOUNDATIONS AND/OR DRIVEN POSTS.
5. INSTALLER/CONTRACTOR SHALL COORDINATE PLACEMENT OF FOUNDATIONS AND/OR ANCHOR BOLTS PER DESIGN DRAWINGS AND/OR MANUFACTURER'S SPECIFICATIONS.
6. RBI SOLAR, INC. DESIGNS DRIVEN-PILE AND ALTERNATIVE FOUNDATIONS BASED ON SOIL PROPERTIES OUTLINED IN CERTIFIED GEOTECHNICAL REPORTS AND/OR DATA FROM FIELD TESTING. ALL DESIGNS ASSUME UNDISTURBED SOIL CONDITIONS, AND DO NOT TAKE INTO ACCOUNT TRENCHING NEAR FOUNDATIONS. FOR CASES WHERE TRENCHING FOR ELECTRICAL WORK IS AT OR NEAR A FOUNDATION, RBI SOLAR RECOMMENDS A MINIMUM OF 3'-0" CLEAR FROM THE EDGE OF THE TRENCH TO THE EDGE OF THE FOUNDATION FOR "NORMAL GOOD SOIL CONDITIONS." IN CASES OF "POOR SOIL" CONDITIONS, RBI SOLAR RECOMMENDS A MINIMUM CLEAR DISTANCE EQUAL TO OR GREATER THAN THE DEPTH OF THE FOUNDATION. IF IN DOUBT OF SOIL CONDITIONS, RBI SOLAR RECOMMENDS CONSULTING A QUALIFIED GEOTECHNICAL ENGINEER TO ASSESS SOIL CONDITIONS AT THE SITE.

   NOTE: TRENCHING/EXCAVATION WITHIN 3'-0" OF ANY RACK SUPPORT POST REQUIRES REPLACING THE ORIGINAL SOIL AND COMPACTION TO 95% STANDARD PROCTOR DENSITY. FOR FURTHER CLARIFICATION ON COMPACTION REQUIREMENTS, RBI SOLAR RECOMMENDS CONSULTING A QUALIFIED GEOTECHNICAL ENGINEER.

ETL CLASSIFIED:

THIS PROJECT CONTAINS RACKING LABELED AS ETL CLASSIFIED UNDER UL SUBJECT 2703. LABELS ARE APPLIED AT THE FACTORY ON COMPONENTS THAT MAY BE ASSEMBLED AT THE FACTORY OR IN THE FIELD. SEE DETAIL SHEET IN THIS DRAWING SET FOR MORE INFORMATION.

RBI SOLAR
GM-I — Model Number
NA
Classified under UL Subject 2703 for Bonding and Grounding Only
EXAMPLE

RACK SYSTEM TOPOGRAPHIC RELATIONSHIP

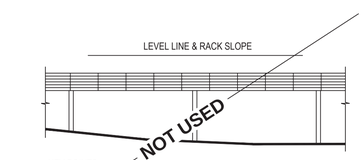

KEY POINTS
1. TOP OF RACK STRUCTURE IS LEVEL
2. COLUMN LENGTHS MAY VARY THROUGHOUT
3. EXPOSED PIER HEIGHTS MAY VARY

FLAT PLANE

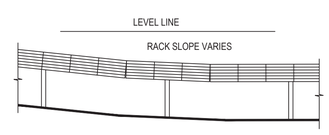

KEY POINTS
1. RACK STRUCTURE IS PARALLEL TO SITE GRADE
2. COLUMN LENGTHS ARE EQUAL THROUGHOUT
3. TOPS OF PIERS FOLLOW SITE GRADE
4. EXPOSED PIER HEIGHTS MAY VARY

FOLLOW GRADE

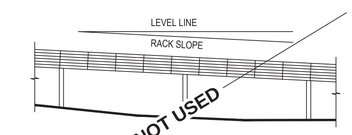

KEY POINTS
1. RACK STRUCTURE IS PARALLEL TO AVERAGE SITE GRADE
2. COLUMN LENGTHS MAY VARY THROUGHOUT
3. TOPS OF PIERS FOLLOW AVERAGE SITE GRADE
4. EXPOSED PIER HEIGHTS MAY VARY

FOLLOW AVERAGE GRADE

RBI SOLAR
Total Solar Service: Design * Fabrication
Installation * Parts * Repair Service
5513 VINE STREET
CINCINNATI, OH 45217
513.242.2051
FAX: 513.242.0816

PROFESSIONAL SEAL

ENGINEER'S SEAL APPLIES TO DESIGN OF STRUCTURAL COMPONENTS ONLY

COMMONWEALTH OF MASSACHUSETTS
MOHAMED A. ALY
STRUCTURAL
No. 50028
REGISTERED PROFESSIONAL ENGINEER

GROUND MOUNT FOR SunEdison

RELEASE RECORD

MARK	DATE	DESCRIPTION
4	1/21/16	100% SEALED SET
3	1/20/16	90% SET
2	1/13/16	PERMIT SET
1	1/11/16	PRELIMINARY REVIEW

PROJECT INFORMATION

TITLE & ADDRESS:
TITCOMB LANDFILL
SOUTH HUNT RD RTE 150
AMESBURY, MA 01913

RBI SOLAR PROJECT No.: 153871

DRAWN BY: EDM
REVIEWED BY: AW/BDS

SHEET TITLE: GENERAL NOTES/ MODULE SPECIFICATION SHEETS

SHEET No.: **G-002**

The drawings and data in this document, and the intellectual property and confidential information it contains, are the property of RBI Solar, Inc. 5513 Vine Street, Cincinnati, Ohio, 45217. Any party accepting this document does so in confidence and agrees that it shall not be duplicated, in whole or in part, nor disclose to others without the written consent of RBI Solar, Inc. ©

USER: AWOLKE PLOTTED: 1/21/2016 - 10:00 AM S:\RBI Solar\Design\2015\Jobs\153871-SunEdison-Titcomb Landfill - Amesbury MA\Drawings\153871 - Titcom Landfill (012016 AW).dwg LAYOUT: G-002

BALLAST SCHEDULE

SYMBOL	MARK	DESCRIPTION	WEIGHT	PIECES	DETAIL
A	A	8'-10" x 2'-6" x 1'-6" REINFORCED CONCRETE BALLAST, W/ (1) 37 3/8" & (1) 10 11/16" W6x8.5 POST	4969	321	A1/S-301 & A9/S-302
	B	8'-10" x 1'-9" x 1'-6" REINFORCED CONCRETE BALLAST, W/ (1) 37 3/8" & (1) 10 11/16" W6x8.5 POST	3478	261	A1/S-301 & A9/S-302

BALLAST SETTING NOTES:
1. ALL BALLAST DIMENSIONS SHOWN ARE CENTERLINE TO CENTERLINE OF BALLAST
2. REFERENCE SHEET S-302 FOR ADDITIONAL INFORMATION ON REQUIRED BALLAST

BAY SCHEDULE

BAYS				PURLINS				DETAIL
TYPE	QTY.	POST-POST	DESCRIPTION	MARK	LGTH.	#/BAY	PCS.	
3EP2	1	SEE BAY PLAN	Trina 315W PORTRAIT MODULES 3 WIDE x 2 HIGH WITH 1 CANTILEVER EAST SIDE AND 20.0° TILT	Z3E	158 7/8"	4	4	A8/S-301
3P2	26	SEE BAY PLAN	Trina 315W PORTRAIT MODULES 3 WIDE x 2 HIGH AND 20.0° TILT	Z3	119 1/16"	4	104	A10/S-301
4EP2	52	SEE BAY PLAN	Trina 315W PORTRAIT MODULES 4 WIDE x 2 HIGH WITH 1 CANTILEVER EAST SIDE AND 20.0° TILT	Z4E	198 5/8"	4	208	C8/S-301
4P2	216	SEE BAY PLAN	Trina 315W PORTRAIT MODULES 4 WIDE x 2 HIGH AND 20.0° TILT	Z4	158 7/8"	4	864	C10/S-301
4WP2	53	SEE BAY PLAN	Trina 315W PORTRAIT MODULES 4 WIDE x 2 HIGH WITH 1 CANTILEVER WEST SIDE AND 20.0° TILT	Z4W	198 5/8"	4	212	E10/S-301
5P2	181	SEE BAY PLAN	Trina 315W PORTRAIT MODULES 5 WIDE x 2 HIGH AND 20.0° TILT	Z5	198 5/8"	4	724	E8/S-301

NOTES THIS BAY:
1. PURLINS ARE 2 3/4" x 7" x 2 3/4" ZEE 16 GA. GALVANIZED UNLESS NOTED OTHERWISE.
2. TOP CHORDS ARE 131 7/8" x 4" SQ. 14 GA. GALVANIZED UNLESS NOTED OTHERWISE.
3. KNEE BRACES ARE 38 5/8" x 2" SQ. 15 GA. GALVANIZED UNLESS NOTED OTHERWISE.

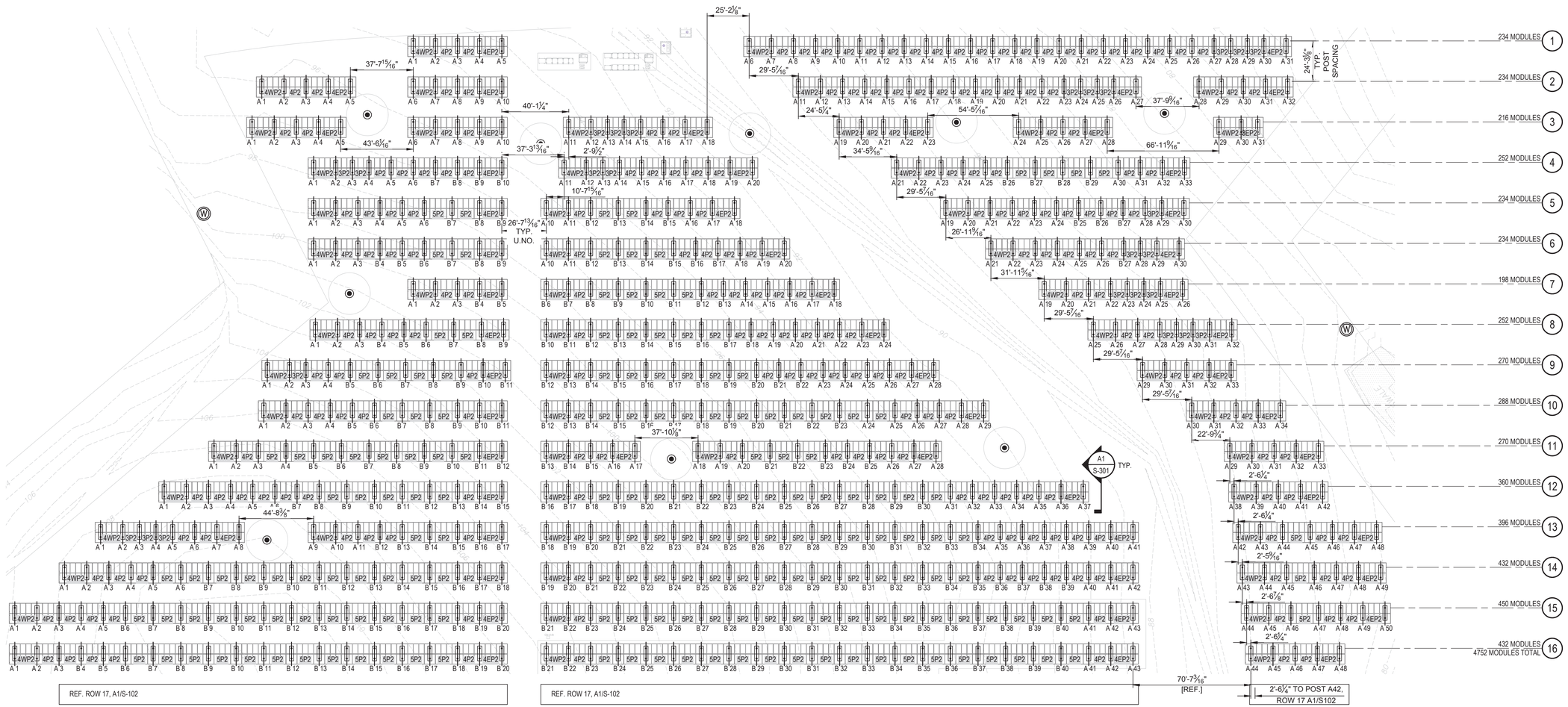

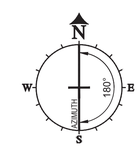

A1
SCALE: 1/32" = 1'-0"

COMPONENT LAYOUT "A"

RBI SOLAR
Total Solar Service: Design * Fabrication Installation * Parts * Repair Service
5513 VINE STREET
CINCINNATI, OH 45217
513.242.2051
FAX: 513.242.0816

PROFESSIONAL SEAL

ENGINEER'S SEAL APPLIES TO DESIGN OF STRUCTURAL COMPONENTS ONLY

COMMONWEALTH OF MASSACHUSETTS
MOHAMED A. ALY
STRUCTURAL
No. 50028
REGISTERED PROFESSIONAL ENGINEER

GROUND MOUNT FOR SunEdison

RELEASE RECORD

MARK	DATE	DESCRIPTION
4	1/21/16	100% SEALED SET
3	1/20/16	90% SET
2	1/13/16	PERMIT SET
1	1/11/16	PRELIMINARY REVIEW

PROJECT INFORMATION

TITLE & ADDRESS:
TITCOMB LANDFILL
SOUTH HUNT RD RTE 150
AMESBURY, MA 01913

RBI SOLAR PROJECT No.: 153871

DRAWN BY: EDM
REVIEWED BY: AW/BDS

SHEET TITLE: COMPONENT LAYOUT "A"

SHEET No.: **S-101**

The drawings and data in this document, and the intellectual property and confidential information it contains, are the property of RBI Solar, Inc. 5513 Vine Street, Cincinnati, Ohio, 45217. Any party accepting this document does so in confidence and agrees that it shall not be duplicated, in whole or in part, nor disclose to others without the written consent of RBI Solar, Inc.©

USER: AWOLKE PLOTTED: 1/21/2016 - 10:00 AM S:\RBI Solar\Design\2015 Jobs\153871-SunEdison-Titcomb Landfill - Amesbury MA\Drawings\153871 - Titcom Landfill (012016 AW).dwg LAYOUT: S-101

BALLAST SCHEDULE

SYMBOL	MARK	DESCRIPTION	WEIGHT	PIECES	DETAIL
A#	A	8'-10" x 2'-6" x 1'-6" REINFORCED CONCRETE BALLAST, W/ (1) 4 11/16" & (1) 31 11/16" W6x8.5 POST	4969	205	A1/S-301 & A9/S-302
	B	8'-10" x 1'-9" x 1'-6" REINFORCED CONCRETE BALLAST, W/ (1) 4 11/16" & (1) 31 11/16" W6x8.5 POST	3478	384	A1/S-301 & A9/S-302

BALLAST SETTING NOTES:
1. ALL BALLAST DIMENSIONS SHOWN ARE CENTERLINE TO CENTERLINE OF BALLAST
2. REFERENCE SHEET S-302 FOR ADDITIONAL INFORMATION ON REQUIRED BALLAST

BAY SCHEDULE

BAYS				PURLINS				DETAIL
TYPE	QTY.	POST-POST	DESCRIPTION	MARK	LGTH.	#/BAY	PCS.	
3EP2	7	SEE BAY PLAN	Trina 315W PORTRAIT MODULES 3 WIDE x 2 HIGH WITH 1 CANTILEVER EAST SIDE AND 20.0° TILT	Z3E	158 7/8"	4	28	A8/S-301
3P2	9	SEE BAY PLAN	Trina 315W PORTRAIT MODULES 3 WIDE x 2 HIGH AND 20.0° TILT	Z3	119 1/16"	4	36	A10/S-301
4EP2	37	SEE BAY PLAN	Trina 315W PORTRAIT MODULES 4 WIDE x 2 HIGH WITH 1 CANTILEVER EAST SIDE AND 20.0° TILT	Z4E	198 5/8"	4	148	C8/S-301
4P2	144	SEE BAY PLAN	Trina 315W PORTRAIT MODULES 4 WIDE x 2 HIGH AND 20.0° TILT	Z4	158 7/8"	4	576	C10/S-301
4WP2	44	SEE BAY PLAN	Trina 315W PORTRAIT MODULES 4 WIDE x 2 HIGH WITH 1 CANTILEVER WEST SIDE AND 20.0° TILT	Z4W	198 5/8"	4	176	E10/S-301
5P2	304	SEE BAY PLAN	Trina 315W PORTRAIT MODULES 5 WIDE x 2 HIGH AND 20.0° TILT	Z5	198 5/8"	4	1216	E8/S-301

NOTES THIS BAY:
1. PURLINS ARE 2 3/4" x 7" x 2 3/4" ZEE 16 GA. GALVANIZED UNLESS NOTED OTHERWISE.
2. TOP CHORDS ARE 131 7/8" x 4" SQ. 14 GA. GALVANIZED UNLESS NOTED OTHERWISE.
3. KNEE BRACES ARE 38 5/8" x 2" SQ. 15 GA. GALVANIZED UNLESS NOTED OTHERWISE.

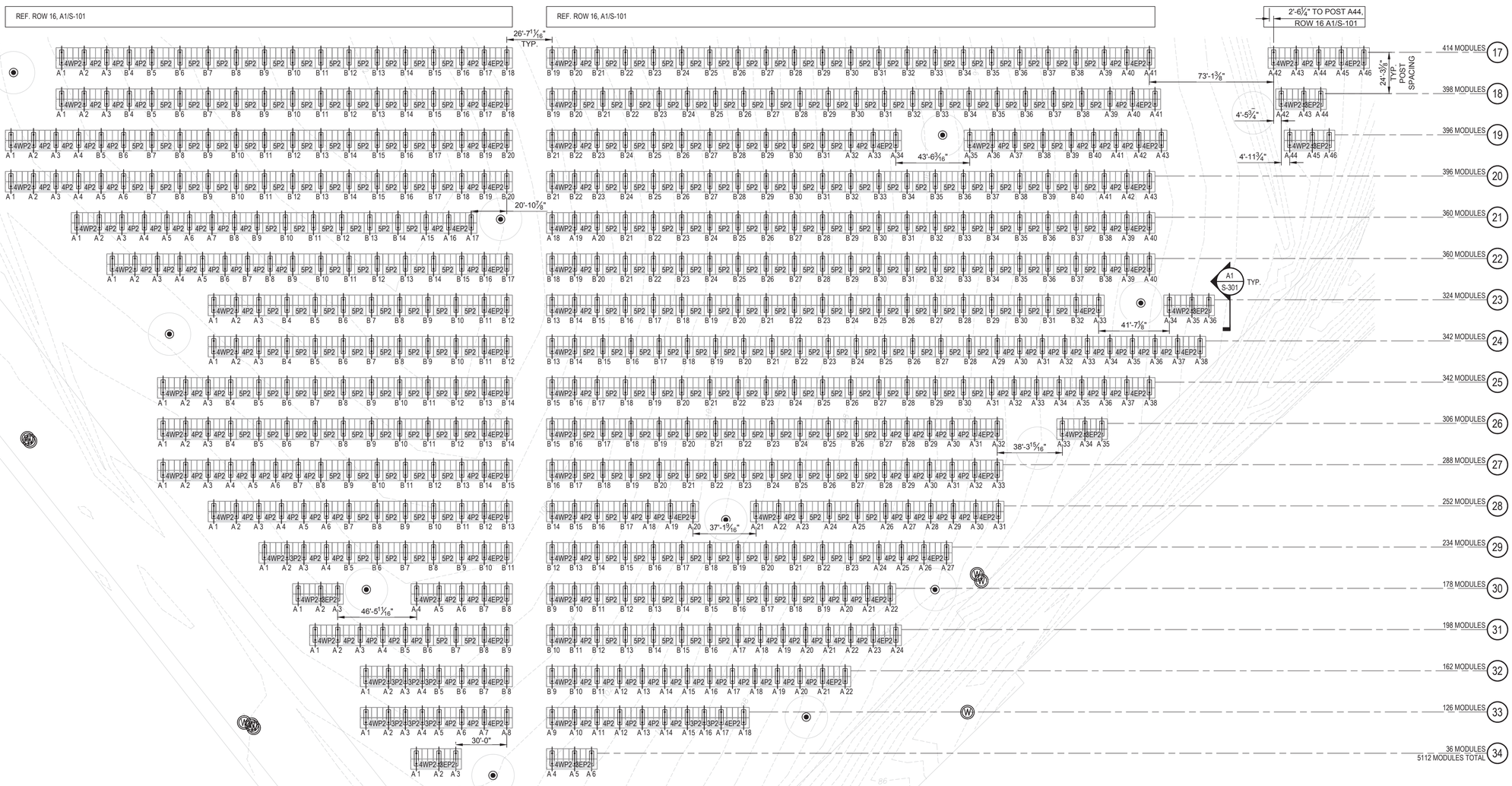

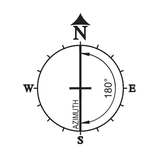

A1
SCALE: 1/32" = 1'-0"

COMPONENT LAYOUT "B"

RBI SOLAR
Total Solar Service: Design * Fabrication Installation * Parts * Repair Service
5513 VINE STREET
CINCINNATI, OH 45217
513.242.2051
FAX: 513.242.0816

PROFESSIONAL SEAL

ENGINEER'S SEAL APPLIES TO DESIGN OF STRUCTURAL COMPONENTS ONLY

COMMONWEALTH OF MASSACHUSETTS
MOHAMED A. ALY
STRUCTURAL
No. 50028
PROFESSIONAL ENGINEER

GROUND MOUNT FOR SunEdison

RELEASE RECORD

MARK	DATE	DESCRIPTION
4	1/21/16	100% SEALED SET
3	1/20/16	90% SET
2	1/13/16	PERMIT SET
1	1/11/16	PRELIMINARY REVIEW

PROJECT INFORMATION

TITLE & ADDRESS:
TITCOMB LANDFILL
SOUTH HUNT RD RTE 150
AMESBURY, MA 01913

RBI SOLAR PROJECT No.: 153871

DRAWN BY: EDM
REVIEWED BY: AW/BDS

SHEET TITLE: COMPONENT LAYOUT "B"

SHEET No.: **S-102**

The drawings and data in this document, and the intellectual property and confidential information it contains, are the property of RBI Solar, Inc. 5513 Vine Street, Cincinnati, Ohio, 45217. Any party accepting this document does so in confidence and agrees that it shall not be duplicated, in whole or in part, nor disclose to others without the written consent of RBI Solar, Inc. ©

USER: AWOLKE PLOTTED: 1/21/2016 - 10:00 AM S:\RBI Solar\Design\2015 Jobs\153871-SunEdison-Titcomb Landfill - Amesbury MA\Drawings\153871 - Titcom Landfill (012016 AW).dwg LAYOUT: S-102

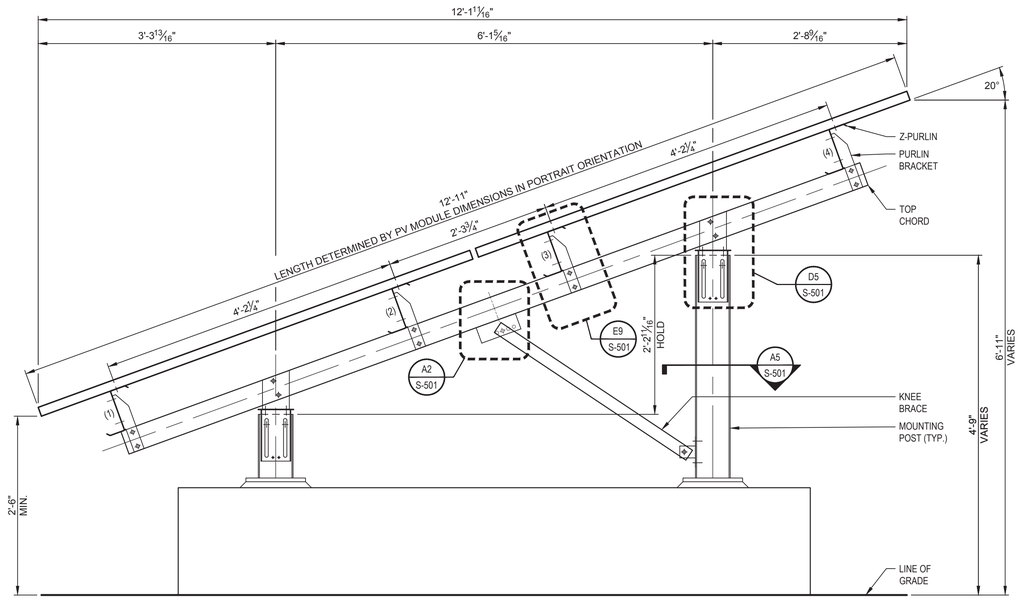

A1 SCALE: 1" = 1'-0"
RACK SECTION

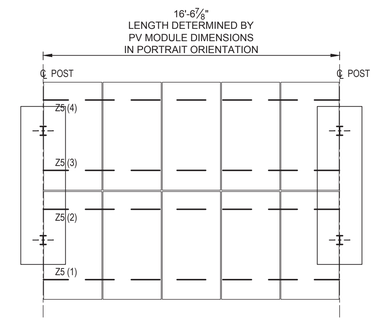

E8 SCALE: 1/4" = 1'-0"
5P2 BAY PLAN VIEW

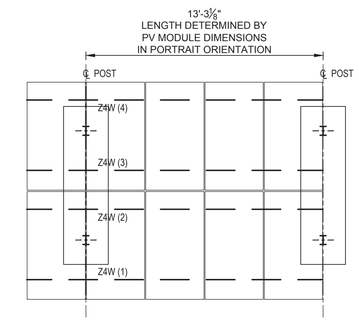

E10 SCALE: 1/4" = 1'-0"
4WP2 BAY PLAN VIEW

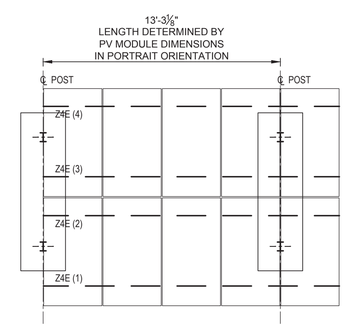

C8 SCALE: 1/4" = 1'-0"
4EP2 BAY PLAN VIEW

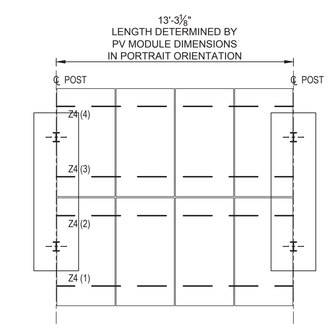

C10 SCALE: 1/4" = 1'-0"
4P2 BAY PLAN VIEW

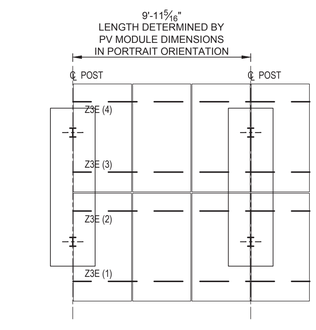

A8 SCALE: 1/4" = 1'-0"
3EP2 BAY PLAN VIEW

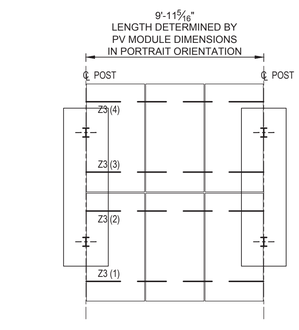

A10 SCALE: 1/4" = 1'-0"
3P2 BAY PLAN VIEW

RBI SOLAR
Total Solar Service: Design * Fabrication
Installation * Parts * Repair Service
5513 VINE STREET
CINCINNATI, OH 45217
513.242.2051
FAX: 513.242.0816

PROFESSIONAL SEAL

ENGINEER'S SEAL APPLIES TO DESIGN OF STRUCTURAL COMPONENTS ONLY

COMMONWEALTH OF MASSACHUSETTS
MOHAMED A. ALY
STRUCTURAL
No. 50028
REGISTERED PROFESSIONAL ENGINEER

GROUND MOUNT
FOR
SunEdison

RELEASE RECORD

MARK	DATE	DESCRIPTION
4	1/21/16	100% SEALED SET
3	1/20/16	90% SET
2	1/13/16	PERMIT SET
1	1/11/16	PRELIMINARY REVIEW

PROJECT INFORMATION

TITLE & ADDRESS:
TITCOMB LANDFILL
SOUTH HUNT RD RTE 150
AMESBURY, MA 01913

RBI SOLAR PROJECT No.: 153871

DRAWN BY: EDM
REVIEWED BY: AW/BDS

SHEET TITLE:
RACK SECTION
& BAY PLAN VIEWS

SHEET No.:
S-301

The drawings and data in this document, and the intellectual property and confidential information it contains, are the property of RBI Solar, Inc. 5513 Vine Street, Cincinnati, Ohio, 45217. Any party accepting this document does so in confidence and agrees that it shall not be duplicated, in whole or in part, nor disclose to others without the written consent of RBI Solar, Inc. ©

USER: AWOLKE PLOTTED: 1/21/2016 - 10:00 AM S:\RBI Solar\Design\2015-Jobs\153871-SunEdison-Titcomb Landfill - Amesbury MA\Drawings\153871 - Titcom Landfill (012016 AW).dwg LAYOUT: S-301

BALLAST SCHEDULE							
TYPE	LENGTH	WIDTH	DEPTH	POST SPACING	LONGITUDINAL REINFORCING	TRANSVERSE REINFORCING	WEIGHT (≈ LBS.)
A	8'-10"	2'-6"	1'-6"	6'-1 5/16"	(3) #5 TOP & BOTTOM	(7) #5 TOP & BOTTOM	4969
B	8'-10"	1'-9"	1'-6"	6'-1 5/16"	(2) #5 TOP & BOTTOM	(7) #5 TOP & BOTTOM	3478
NOTE: ALL REINFORCING TO HAVE 3" MINIMUM COVER							

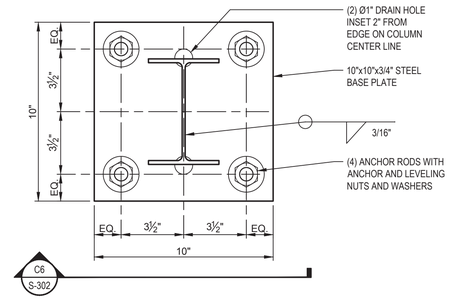

G9 SCALE: 3" = 1'-0" — **BALLAST BLOCK BASE PLATE DETAIL**

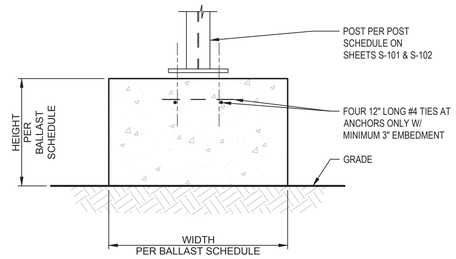

E9 SCALE: 1" = 1'-0" — **BALLAST BLOCK SECTION**

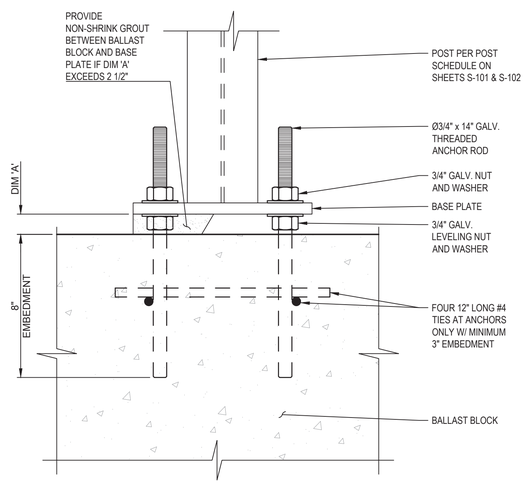

C6 SCALE: 3" = 1'-0" — **BALLAST BLOCK ANCHOR ROD DETAIL**

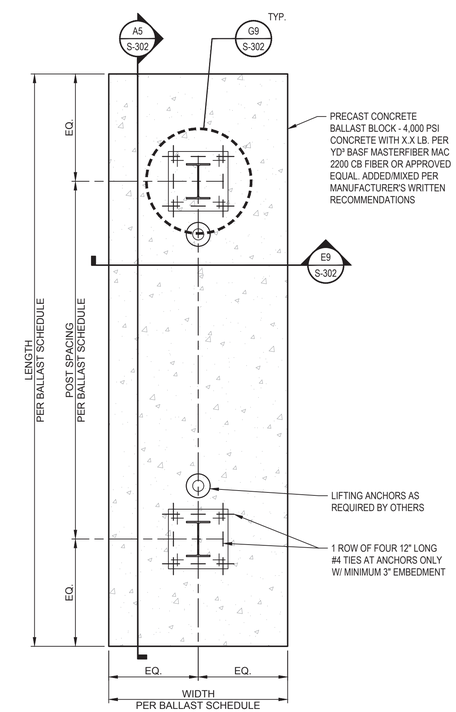

A9 SCALE: 1" = 1'-0" — **BALLAST BLOCK PLAN**

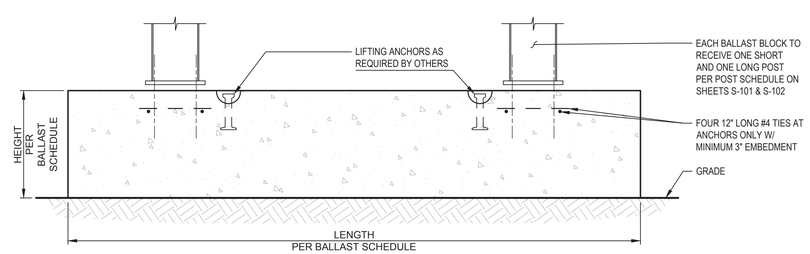

A5 SCALE: 1" = 1'-0" — **BALLAST BLOCK SECTION**

RBI SOLAR
Total Solar Service: Design * Fabrication Installation * Parts * Repair Service
5513 VINE STREET
CINCINNATI, OH 45217
513.242.2051
FAX: 513.242.0816

PROFESSIONAL SEAL

ENGINEER'S SEAL APPLIES TO DESIGN OF STRUCTURAL COMPONENTS ONLY

COMMONWEALTH OF MASSACHUSETTS — MOHAMED A. ALY — STRUCTURAL — No. 50028 — REGISTERED PROFESSIONAL ENGINEER

GROUND MOUNT FOR SunEdison

RELEASE RECORD

MARK	DATE	DESCRIPTION
4	1/21/16	100% SEALED SET
3	1/20/16	90% SET
2	1/13/16	PERMIT SET
1	1/11/16	PRELIMINARY REVIEW

PROJECT INFORMATION

TITLE & ADDRESS:
TITCOMB LANDFILL
SOUTH HUNT RD RTE 150
AMESBURY, MA 01913

RBI SOLAR PROJECT No.: 153871

DRAWN BY: EDM
REVIEWED BY: AW/BDS

SHEET TITLE: BALLAST BLOCK DETAILS AND SCHEDULE

SHEET No.: **S-302**

The drawings and data in this document, and the intellectual property and confidential information it contains, are the property of RBI Solar, Inc. 5513 Vine Street, Cincinnati, Ohio, 45217. Any party accepting this document does so in confidence and agrees that it shall not be duplicated, in whole or in part, nor disclose to others without the written consent of RBI Solar, Inc. ©

USER AWOLKE PLOTTED: 1/21/2016 - 10:00 AM S:\RBI Solar\Design\2015 Jobs\153871-SunEdison-Titcomb Landfill - Amesbury MA\Drawings\153871 - Titcom Landfill (012016 AW).dwg LAYOUT: S-302

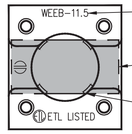

INSTALL WEEB WITH LABEL FACING UP AND ORIENTED IN SLOT AS SHOWN

LINE OF 3/8" x 3/4" RECTANGULAR PUNCHED HOLE (SLOT) IN PURLIN BELOW

THE 4 WEEB 'LEGS' SHOULD CONTACT EDGE OF SLOT

NOTE: WEEB SHOULD FIT SNUGLY IN SLOT

FOR USE WITH 5/16" HARDWARE (1 PER PV MODULE)

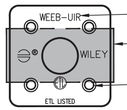

INSTALL WEEB WITH LABEL FACING UP AS SHOWN

LINE OF 3/8" x 3/4" RECTANGULAR PUNCHED HOLE (SLOT) IN PURLIN BELOW

WEEB 'TEETH' SHOULD BE ORIENTED UP TO EMBED IN PV MODULE FRAME

NOTE: WEEB MAY ROTATE DURING FASTENER TIGHTENING

FOR USE WITH 1/4" HARDWARE (1 PER PV MODULE)

F5 SCALE: NONE — **WEEB PV MODULE BONDING WASHER DETAIL**

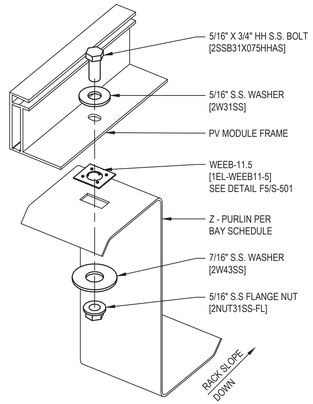

5/16" X 3/4" HH S.S. BOLT [2SSB31X075HHAS]

5/16" S.S. WASHER [2W31SS]

PV MODULE FRAME

WEEB-11.5 [1EL-WEEB11-5] SEE DETAIL F5/S-501

Z - PURLIN PER BAY SCHEDULE

7/16" S.S. WASHER [2W43SS]

5/16" S.S FLANGE NUT [2NUT31SS-FL]

E7 SCALE: NONE — **PV MODULE TO PURLIN CONNECTION DETAIL**

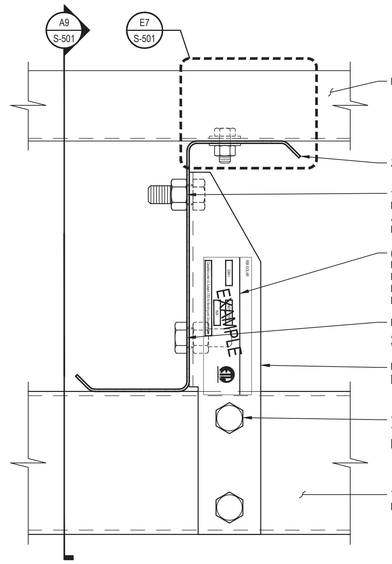

PV MODULE

Z-PURLIN PER BAY SCHEDULE

1/2" x 1 1/4" HH GALVANIZED BOLT & NUT (TYP.) [2GB50X125HH] ORIENT AS SHOWN TO ALLOW MODULE HARDWARE INSTALLATION

(2) ETL CLASSIFIED LABELED PURLIN BRACKETS PER ROW. INSTALLED AT EYE LEVEL AT BOTH ENDS OF EVERY ROW

BOLT ORIENTATION SHOWN TO ALLOW PURLIN TO BE USED FOR WIRE MANAGEMENT

PURLIN MOUNTING BRACKET [S7045]

1/2" x 5" HH GALVANIZED THRU BOLT & NUT (TYP.) [2GB50X500HH]

TOP CHORD PER BAY SCHEDULE

E9 SCALE: 6" = 1'-0" — **TRANSVERSE PURLIN CONNECTION DETAIL**

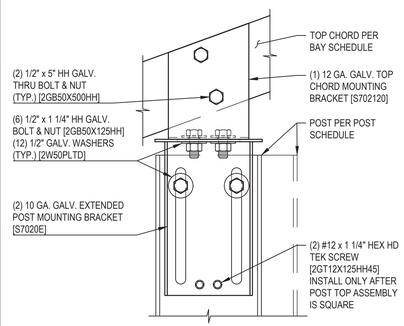

TOP CHORD PER BAY SCHEDULE

(1) 12 GA. GALV. TOP CHORD MOUNTING BRACKET [S702120]

(2) 1/2" x 5" HH GALV. THRU BOLT & NUT (TYP.) [2GB50X500HH]

(6) 1/2" x 1 1/4" HH GALV. BOLT & NUT [2GB50X125HH] (12) 1/2" GALV. WASHERS (TYP.) [2W50PLTD]

POST PER POST SCHEDULE

(2) 10 GA. GALV. EXTENDED POST MOUNTING BRACKET [S7020E]

(2) #12 x 1 1/4" HEX HD TEK SCREW [2GT12X125HHM45] INSTALL ONLY AFTER POST TOP ASSEMBLY IS SQUARE

D5 SCALE: 3" = 1'-0" — **TOP CHORD TO POST CONNECTION DETAIL**

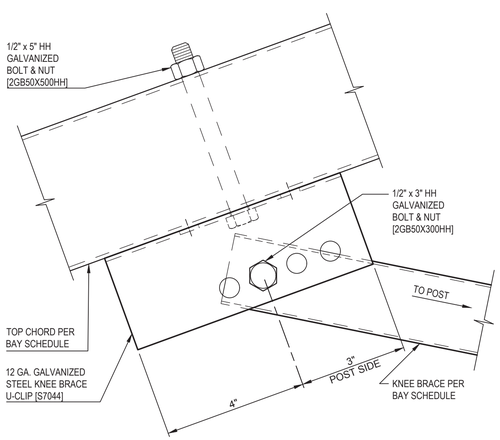

1/2" x 5" HH GALVANIZED BOLT & NUT [2GB50X500HH]

1/2" x 3" HH GALVANIZED BOLT & NUT [2GB50X300HH]

TOP CHORD PER BAY SCHEDULE

12 GA. GALVANIZED STEEL KNEE BRACE U-CLIP [S7044]

KNEE BRACE PER BAY SCHEDULE

NOTE: INSTALL KNEE BRACE U-CLIP WITH MOUNTING HOLE(S) NEARER SUPPORT POST AS SHOWN

A2 SCALE: 6" = 1'-0" — **LOWER KNEE BRACE TO TOP CHORD CONNECTION DETAIL**

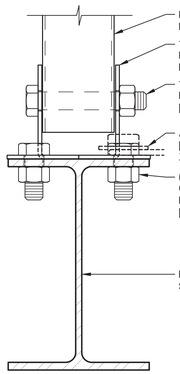

KNEE BRACE PER BAY SCHEDULE

12 GA. GALVANIZED KNEE BRACE CLIP EACH SIDE [S7041]

1/2" x 3" HH GALVANIZED BOLT & NUT [2GB50X300HH]

ADD 1/2" GALV. WASHER [2W50PLTD] AT CABLE X-BRACE

(2) 1/2" x 1 1/4" HH GALVANIZED BOLT & NUT PER CLIP [2GB50X125HH]

POST PER POST SCHEDULE

A5 SCALE: 6" = 1'-0" — **KNEE BRACE TO POST CONNECTION DETAIL**

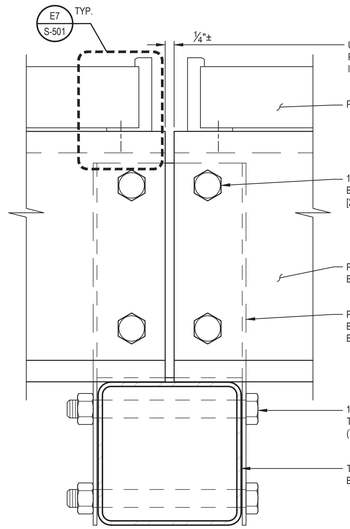

USE 1/4" THICK SPACING PLATE AS DIRECTED IN INSTALLATION MANUAL

PV MODULE (TYP.)

1/2" x 1 1/4" HH GALVANIZED BOLT & NUT (TYP.) [2GB50X125HH]

PURLIN PER BAY SCHEDULE

PURLIN MOUNTING BRACKET [S7045] BEHIND

1/2" x 5" HH GALVANIZED THRU BOLT & NUT (TYP.) [2GB50X500HH]

TOP CHORD PER BAY SCHEDULE

A9 SCALE: 6" = 1'-0" — **LONGITUDINAL PURLIN CONNECTION DETAIL**

RBI SOLAR

Total Solar Service: Design * Fabrication Installation * Parts * Repair Service

5513 VINE STREET
CINCINNATI, OH 45217
513.242.2051
FAX: 513.242.0816

PROFESSIONAL SEAL

ENGINEER'S SEAL APPLIES TO DESIGN OF STRUCTURAL COMPONENTS ONLY

COMMONWEALTH OF MASSACHUSETTS
MOHAMED A. ALY
STRUCTURAL
No. 50028
REGISTERED PROFESSIONAL ENGINEER

GROUND MOUNT FOR SunEdison

RELEASE RECORD

MARK	DATE	DESCRIPTION
4	1/21/16	100% SEALED SET
3	1/20/16	90% SET
2	1/13/16	PERMIT SET
1	1/11/16	PRELIMINARY REVIEW

PROJECT INFORMATION

TITLE & ADDRESS:

TITCOMB LANDFILL
SOUTH HUNT RD RTE 150
AMESBURY, MA 01913

RBI SOLAR PROJECT No.: 153871

DRAWN BY: EDM — REVIEWED BY: AW/BDS

SHEET TITLE: DETAILS

SHEET No.: **S-501**

The drawings and data in this document, and the intellectual property and confidential information it contains, are the property of RBI Solar, Inc. 5513 Vine Street, Cincinnati, Ohio, 45217. Any party accepting this document does so in confidence and agrees that it shall not be duplicated, in whole or in part, nor disclose to others without the written consent of RBI Solar, Inc. ©

USER: AWOLKE PLOTTED: 1/21/2016 - 10:01 AM S:\RBI Solar\Design\2015 Jobs\153871-SunEdison-Titcomb Landfill - Amesbury MA\Drawings\153871 - Titcom Landfill (012016 AW).dwg LAYOUT: S-501