AMESBURY ELEMENTARY SCHOOL

AMESBURY MA

VOLUME 2 of 2
21 AUGUST 2020
90% COST ESTIMATE SET

Location Plan

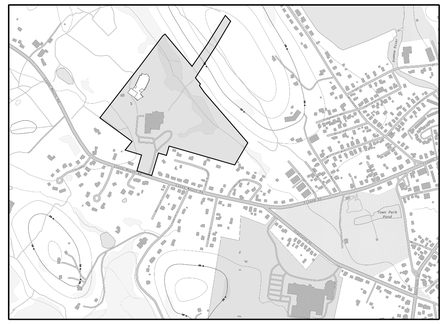

Owner's Project Manager

NV5

70 Fargo Street
Boston MA 02210
(617) 345-9885
FAX: (617) 345-4226

Architects

DINISCO DESIGN
architects + planners

99 Chauncy Street, Suite 901
Boston, MA 02111
(617) 426-2858
FAX: (617) 426-1457

Consultants

DGT Associates
Surveying & Engineers
1071 Worcester Road
Framingham, MA 01701
(508) 879-0030
FAX: (508) 879-1797

Brown Sardina, Inc.
Landscape Architects
24 Roland Street
Boston, MA 02129
(617) 482-4703

Foley Buhl Roberts & Assoc., Inc.
Structural Engineers
2150 Washington Street
Newton, MA 02462
(617) 527-9600
FAX: (617) 527-9606

Crabtree McGrath Assoc., Inc.
Food Service Consultants
161 West Main Street
Georgetown, MA 01833
(978) 352-8500
FAX: (978) 352-8588

VAV International, Inc.
Mechanical Engineers
400 West Cummings Park S. 4700
Woburn, MA 01801
(781) 935-7228
FAX: (781) 935-1822

Thompson Engineering Company, Inc.
Electrical Engineers
89 Newbury Street, Suite 103
Danvers, MA 01923
(617) 866-9066
FAX: (617) 866-9090

Hancock Associates
Surveyor
185 Centre Street
Danvers, MA 09123
(978) 777-3050
FAX: (978) 774-4532

EdVance Technology Design, Inc.
Technology Consultants
300 Brickstone Square, Suite 201
Andover, MA 01880
(978) 256-9900
FAX: (978) 560-1771

Symbols & Materials

- WALL SECTION (1 / 3.8.01)
- BUILDING SECTION (1 / 3.7.01)
- EXTERIOR ELEVATION (1 / 3.6.01)
- INTERIOR ELEVATION (1 / 4 / 5.4.01 / 2 / 3)
- DETAIL SECTION (1 / 3.9.01)
- PLAN DETAIL (1 / 3.9.01)
- ELEVATION (±103.0')
- DOOR NUMBERS (101)
- FRAME TYPES (3F)
- WINDOW TYPES (A)
- GLAZING TYPES (1)
- LOUVER TYPES (1)
- PARTITION TYPES (1)
- ROOM NUMBER (101)
- PROJECT NORTH (Called North)
- COLUMN LINES (14)
- PROPERTY LIMIT LINE
- BUILDING SETBACK
- MATCH LINE
- CONCRETE MASONRY UNIT
- CONCRETE
- CONCRETE
- BRICK
- BITUMINOUS CONCRETE
- GYPSUM BOARD
- EARTH
- COMPACTED BASE COURSE
- SEALANT
- STEEL
- BATT INSULATION
- COMPRESSIBLE FILLER/ RIGID INSULATION
- FINISHED WOOD
- WOOD END GRAIN
- CONTINUOUS WOOD BLOCKING
- WOOD SHIM

General Abbreviations

+/- *or* ±	Plus or Minus / Approximately
<	Angle
[	Channel
Ø	Diameter
1HR	1-hour Fire Resistance Rated
2HR	2-hour Fire Resistance Rated
ADJ	Adjustable
AFF	Above Finish Floor
ALT	Alternate
ALUM	Aluminum
ACOUST	Acoustic / Acoustical
AP	Access Panel
ASB	Asbestos
ATC	Acoustic Tile Ceiling
ATHL	Athletic
A&VB	Air and Vapor Barrier
BLDG	Building
BLK	Block
BM	Bench Mark
B.O. *or* BOT	Bottom of
BRK	Brick
BSMT	Basement
C	Course(s)
CB	Catch Basin / Chalkboard
CBB	Cementitious Backerboard
CJ	Control Joint
CL *or* ℄	Center Line
CLSRM	Classroom
CLG	Ceiling
CLR	Clear
CM	Construction Manager
CMP	Composite Metal Panel
CMU	Concrete Masonry Unit
COL	Column
COMP	Compressible
CONC	Concrete
CONT	Continuous
CPT	Carpet
CRD	Cementitious Roof Deck
CT	Ceramic Tile
CU FT	Cubic Foot
CUH	Cabinet Unit Heater
CU YD	Cubic Yard
CVR	Cover
CW	Curtain Wall
DEMO	Demolition
DF	Drinking Fountain
DIM	Dimension
DN	Down
DO	Door Opening
DR/DRS	Door / Doors
DTL	Detail
DWG	Drawing (Also DRWG)
EA	Each
EJ	Expansion Joint
EL	Elevation (Vertical Height)
ELEC	Electric / Electrical
ELEV	Elevation View / Elevator
EMERG	Emergency
EOD	Edge of Deck
EOS	Edge of Slab
EQ	Equal
EQUIP	Equipment
ETBR	Existing to be Removed
ETR	Existing to Remain
EXIST	Existing (Also EXST'G and EX)
EXP	Exposed
EXT	Exterior
FAP	Fibrous Acoustic Panels
FCP	Fabric Covered Acoustic WD Panel
FD	Floor Drain
FDN	Foundation
FDVC	Fire Department Valve Connection
FE	Fire Extinguisher
FF	Finish Floor
FH	Fume Hood
FHC	Fire Hose Cabinet
FIN	Finish
FIB WD	Fibrous Wood
FIN	Finish
FLR	Floor
FL HD	Flat Head
FL HD MS	Flat Head Machine Screw
F.O.	Face of
FOF	Face of Foundation
FOM	Face of Masonry
FOS	Face of Stud
FOW	Face of Window
FP	Fire Protection
FR	Fire Rated
FRP	Fiberglass Reinforced Glass Panel
FTR	Finned Tube Radiator
FURN	Furnish / Furnished
FWP	Fibrous Wood Panel
GA	Gauge
GALV	Galvanized
GC	General Contractor
GFCMU	Ground Face CMU
GFI *or* GFCI	Ground Fault Circuit Interruptor
GFRG	Glass Fiber Reinforced Gypsum
GL	Glass
GLCMU	Glazed Face CMU
GT	Granite Tile
GYP	Gypsum
GWB	Gypsum Wall Board
GWB/AR	GWB: Abuse Resistant
GWF	Glazed Wall Finish (Epoxy)
H	High
HD	Head / Hand Dryer
HDW	Hardware (Also HDWE)
HDWD	Hardwood
HM	Hollow Metal
HORZ	Horizontal
HP	High Point / Handicapped
HR	Hour
HVC	Hose Valve Cabinet
ID	Inside Diameter
INCL	Include
INSUL	Insulation
INT	Interior
INV	Invert
J	Jamb
JT	Joint
KO	Knock Out
KIT	Kitchen
KP	Kickplate
L	Low
LCC	Lead Coated Copper
LCT	Linoleum Composite Tile
LGMF	Light Gauge Metal Framing
LOW	Limit of Work
LP	Low Point
LSG	Linoleum Sheet Goods
MAR	Marble
MAX	Maximum
MB	Marker Board
MECH	Mechanical
MFR	Manufacturer
MH	Manhole
MIN	Minimum
MISC	Miscellaneous
MO	Masonry Opening
MS	Machine Screw
MT	Marble Tile
MTL	Metal
MTD	Mounted
NAT	Natural Finish
ND	Feminine Napkin Disposal
NGMB	Non-Glare Marker Board
NIC	Not In Contract
NO	Number
NTS	Not To Scale
NV	Feminine Napkin Dispenser
OC	On Center
OD	Outside Diameter
OHFD	Overhead Folding Door
OHRD	Overhead Rolling Door
OHRG	Overhead Rolling Grille
OPG	Opening
OPP	Opposite
ORD	Overflow Drain
PLAM	Plastic Laminate
PCF	Pre-molded Compressible Filler
PFC	Performed Cladding
PL *or* ℄	Plate
PLAS	Plaster
PLYWD	Plywood
PM	Pressed Metal
PNL	Panel
PORC	Porcelain Tile
PR	Pair
PREFAB	Prefabricated
PREFIN	Prefinished
PSF	Pounds per Square Foot
PSI	Pounds per Square Inch
PT	Pressure Treated / Paper Towel Dispenser
PTD	Painted
PTN	Partition
PVC	Polyvinyl Chloride
PTT	Precast Terrazzo Tile
QT	Quarry Tile
R	Riser
RAD	Radius
RCB	Resilient Cove Base
RCP	Reflected Ceiling Plan
RD	Roof Drain
REINF	Reinforced
REQD	Required (Also REQ'D)
RES	Resinous Flooring
RHMS	Round Head Metal Screw
RM	Room
RNS	Rubber Nailing Strip
RO	Rough Opening
RTU	Roof Top Unit
RUB	Rubber Flooring
SD	Soap Dispenser
SECT	Section
SF	Square Foot
SFCMU	Split Face CMU
SFTU	Structural Facing Tile Unit
SHT	Sheet
SIM	Similar
SP	Station Point
SPEC	Specification
SRB	Straight Resilient Base
SS	Stainless Steel
SSF	Synthetic Sports Flooring
STD	Standard
STL	Steel
STLP	Steel Liner Panel
STR	Stair
STRUCT	Structure(al)
SUSP	Suspended
SYS	System
SCI	Science
T	Tread
TB	Tackboard
TDF	Transparent Dye Finish
TERR	Terrazzo
T&G	Tongue and Groove
TI	Tapered Insulation
T.O.	Top of
TP	Toilet Paper Dispenser
TS	Structural Tube Steel
TYP	Typical
UCD	Undercut Door
UON	Unless Otherwise Noted
USS	Underside of Structure
UTIL	Utility / Utilities
UV	Unit Ventilator
VCB	Vented Cove Base
VCP	Vitreous Clay Pipe
VCT	Vinyl Composite Tile
VERT	Vertical
VIF	Verify in Field
VSF	Vinyl Sheet Flooring
VTR	Vent Through Roof
VWC	Vinyl Wall Covering
W	Wide
w/ *or* W/	With
WD	Wood
WMP	Wire Mesh Partition
WO	Window Opening
w/o	Without
WP	Working Point
WR	Waste Receptacle
WWF	Welded Wire Fabric
WWM	Welded Wire Mesh
Z	Zee

Division of Work Abbreviations

DIVISION 01-GENERAL REQUIREMENTS
011000-SUMMARY (Summary of Work)
012200-UNIT PRICE (Unit Prices)
012300-ALTERNATES (Alternates)
015000-TEMP FAC (Temporary Facilities and Controls)

DIVISION 02-EXST'G CONDITIONS
023000-SUBSURFACE EXPLORE (Subsurface Exploration Data)

DIVISION 03-CONCRETE
033000-CAST CONC (Cast-In-Place Concrete)

DIVISION 04-MASONRY
040001-MASONRY (*Masonry Work)

DIVISION 05-METALS
050001-MISC & ORN IRON (*Miscellaneous and Ornamental Iron)
051200-STRCT STL (Structural Steel Framing)
051226-SHEAR CONN (Shear Connectors)
052100-STL JSTS (Steel Joists)
053100-MTL DECK (Metal Decking)
055000-MISC MTL (Miscellaneous Metals (Part of 050001))
057000-ORN MTLS (Ornamental Metals)

DIVISION 06-WOOD, PLASTICS AND COMPOSITES
061000-RGH CARP (Rough Carpentry)
062000-FIN CARP (Finish Carpentry)

DIVISION 07-THERMAL AND MOISTURE PROTECTION
070001-WD&C (*Waterproofing, Dampproofing and Caulking)
070002-ROOF & FLSHG (*Roofing and Flashing)
071326-A&VB (Air and Vapor Barrier)
072100-INSUL (Insulation)
074213-PREFORM CLAD (Preformed Cladding)
074233-PHENOLIC SYS (Phenolic Rainscreen System)
074247-FRC PANEL (Fiber Reinforced Cementitious Panel Rainscreen)
076330-ROOF GARDEN SYS (Green Roof Garden System)
078120-SPRAY FIREPROOF (Spray Applied Fireproofing)

DIVISION 08-OPENINGS
080001-MTL WINDOWS (*Metal Windows)
080002-GLASS/GLAZING (*Glass and Glazing)
081113-HOLLOW MTL (Hollow Metal Doors and Frames)
081416-WD / PLAS DRS (Wood & Plastic Doors)
083323-SPEC DRS (Special Doors)
087100-FIN HRDWR (Finish Hardware)

DIVISION 09-FINISHES
090002-TILE (*Tile)
090003-ACOUST TILE (*Acoustical Tile)
090005-RES FLR (*Resilient Flooring)
090007-PAINT (*Painting)
092116-GWB (Gypsum Board)
096466-ATHL FLR (Athletic Flooring)
096816-CARPET (Carpeting)
097700-FRP (Fiberglass Reinforced Plastic Wall Panels)
098400-ACOUST WALL TRTMNT (Acoustical Wall Treatment)
099737-DRY ERASE COATING (Dry Erase Coating)

DIVISION 10-SPECIALTIES
101100-MB & TB (Markerboards and Tackboards)
101400-IDENT DEV (Identifying Devices)
101453-TRAFFIC SIGN (Traffic Signage)
102113-COMPRT & CUBICLES (Compartments and Cubicles)
102600-PREFAB SPECS (Prefabricated Specialties)
102813-TOILET/BATH ACC (Toilet and Bath Accessories)
105113-LOCKERS (Lockers)

DIVISION 11-EQUIPMENT
113100-APPL (Appliances)
114000-FOOD SRVC (Food Service Equipment)
115213-PROJ SCRN (Projection Screens)
116143-STAGE DRAPERY (Stage Drapery)
116600-ATHL & SPRTS EQUIP (Athletic and Sports Equipment)

DIVISION 12-FURNISHINGS
122413-ROLLER SHADES (Roller Shades)
124813-MATS (Mats)

DIVISION 14-CONVEYING EQUIPMENT
140001-ELEV (*Elevators and Lifts)

DIVISION 21-FIRE SUPPRESSION
210001-FIRE PROT (*Fire Protection)

DIVISION 22-PLUMBING
220001-PLUMB (*Plumbing)

DIVISION 23-HEATING VENTILATING AND AIR CONDITIONING
230001-HVAC (*Heating, Ventilating and Air-Conditioning)

DIVISION 25-BUILDING AUTOMATION SYSTEM
250001-BAS (Building Automation System)

DIVISION 26-ELECTRICAL
260001-ELEC (*Electrical Work)
265561-EMERG RADIO (Emergency Radio Communication System)

DIVISION 27 - COMMUNICATIONS
270100-CABLE SYS (Structured Cabling System)
274000-A/V COMM (Audio-Video Communications System)
275000-DISTRIBUTED COMM (Distributed Communications System)

DIVISION 28 - ELECTRICAL SECURITY
280000-INTEGRATED SECURITY (Integrated Security Systems)

DIVISION 31-EARTHWORK
310125-LANDSCAPE MAINT (Landscape Maintenance)
311000-SITE PREP (Site Preparation)
311300-EXIST'G PLNTS (EXSTG Plants to Remain)
312000-EARTHWORK (Earthwork)
312219-FIN GRADE (Finish Grading)
312319-CONTROLLED BLASTING (Controlled Blasting)
312500-EROSION/SEDIMENT CNTRL (Erosion and Sedimentation Control)

DIVISION 32-EXTERIOR IMPROVEMENTS
321200-FLEX PAVING (Vehicular Flexible Paving)
321300-RIGID PAVING (Vehicular Rigid Paving)
321313-SITE CONC (Site Concrete)
321416-POROUS UNIT PAVING (Porous Unit Paving)
321600-CURBS/GUTTERS (Curbs and Gutters)
321705-PAVING SPECS (Paving Specialties)
321800-BITU CONC SURF (Bituminous Concrete Paving / Athletic Surfacing)
321810-PLAYGROUND SURF (Playground Safety Surfacing)
321820-ATHL SURF (Athletic Surfacing)
322000-PEDESTRIAN BRIDGE (Pedestrian Bridge)
323000-MISC SITE IMPRVMNT (Miscellaneous Site Improvements)
323100-FENCE (Fencing)
325200-SYNTHETIC TURF (Synthetic Turf)
328400-IRRIGATION SYSTEM (Irrigation System)
329000-PLANTS (Plantings)
329113-SOIL PREP (Soil Preparation)
329200-LAWN/GRASS (Lawns and Grasses)

DIVISION 33-UTILITIES
331000-WATER DISTR (Water Utilities)
333000-SANITARY SEWER (Sanitary Sewerage Utilities)
334000-STORM DRAINAGE (Storm Drainage)
334620-LNDSCP SUBDRAIN (Landscape Subdrainage)

List of Drawings

GENERAL
G.0.01 CD Cover Sheet

FOOD SERVICE
6.1.00 Food Service Equipment Schedule
6.1.01 Food Service Equipment Plan
6.1.02 Food Service Equipment Rough-in Plan
6.1.03 Food Service Equipment Special Conditions Plan
6.2.01 Food Service Equipment Details

FIRE PROTECTION
7.0.01 Fire Protection Details, Legend & Notes
7.4.01 Ground Floor Fire Protection Plan
7.4.02 First Floor Fire Protection Plan
7.4.03 Second Floor Fire Protection Plan

PLUMBING
8.0.01 Plumbing Schedules and Legend
8.4.01 Ground Floor Under Slab Plumbing Plan
8.4.02 Ground Floor Above Slab Plumbing Plan
8.4.03 First Floor Plumbing Plan
8.4.04 Second Floor Plumbing Plan
8.4.05 Roof Level Plumbing Plan
8.5.01 Plumbing Details
8.5.02 Plumbing Details
8.5.03 Enlarged Kitchen Plumbing Plans
8.5.04 Gas Riser Diagram
8.5.05 Water Piping Riser Diagrams
8.5.06 Riser Diagrams
8.5.07 Plumbing Integrated Building Management System

MECHANICAL
9.0.01 HVAC Schedules & Legend
9.0.02 HVAC Schedules
9.0.03 HVAC Schedules
9.0.04 HVAC Schedules
9.4.01 Ground Floor Ductwork Plan
9.4.02 First Floor Ductwork Plan
9.4.03 Second Floor Ductwork Plan
9.4.04 Roof Level Ductwork Plan
9.5.01 Ground Floor Piping Plan
9.5.02 First Floor Piping Plan
9.5.03 Second Floor Piping Plan
9.5.04 Roof Level Piping Plan
9.6.01 Enlarged Mechanical Room Plan
9.7.01 HVAC Controls
9.7.02 HVAC Controls
9.7.03 HVAC Controls
9.7.04 HVAC Controls
9.7.05 HVAC Controls
9.7.06 HVAC Controls
9.7.07 Integrated Building Management System Architecture
9.8.01 HVAC Details
9.8.02 HVAC Details
9.8.03 HVAC Details
9.8.04 HVAC Details
9.8.05 HVAC Details
9.8.06 HVAC Details

ELECTRICAL
10.0.01 Symbol List
10.0.02 Technology Symbol List
10.0.03 Lighting Fixture Schedule
10.1.01 Site Electrical Demolition Plan
10.1.02 Site Power Plan
10.1.03 Site Lighting Plan
10.1.04 Site Electrical Details
10.2.01 Ground Floor Lighting Plan
10.2.02 Ground Floor Power Plan
10.2.03 First Floor Lighting Plan
10.2.04 First Floor Power Plan
10.2.05 Second Floor Lighting Plan
10.2.06 Second Floor Power Plan
10.2.07 Ground Floor Fire Alarm Plan
10.2.08 First Floor Fire Alarm Plan
10.2.09 Second Floor Fire Alarm Plan
10.2.10 Ground Floor Security Plan
10.2.11 First Floor Security Plan
10.2.12 Second Floor Security Plan
10.2.13 Roof Electrical And Lightning Protection Plan
10.2.14 Enlarged Kitchen Plan
10.3.01 Power Riser Diagram
10.3.02 Panel Schedules
10.3.03 Mechanical Equipment Schedule
10.3.04 Fire Alarm Riser Diagram
10.3.05 Voice/Data Riser Diagram
10.3.06 Voice/Data Details
10.3.07 Lighting Control Details Sheet #1
10.3.08 Lighting Control Details Sheet #2
10.3.09 Sound System Details Sheet #1
10.3.10 Sound System Details Sheet #2
10.3.11 Security System Details
10.3.12 Details Sheet
10.3.13 IBMS System Details

AMESBURY ELEMENTARY SCHOOL

193 LIONS MOUTH RD AMESBURY MA 01913

LICENSE STAMP

Date: 21 August 2020

Revisions

Number	Date	Description

90% COST ESTIMATE SET

CD Cover Sheet - Volume 2 of 2

G.0.01

© 2020 DiNisco Design - [36" x 48"] - 8/20/20

SCHEDULE OF FOODSERVICE EQUIPMENT AND CONNECTIONS

Item	Qty	Description	Plumbing	Electrical	Mechanical / Equipment Remarks
1	1	Mop sink & faucet (by Section 22 00 01)	1/2" H&CW; Drain in floor		
2	1	Mop rack/shelf			
3	1	Mop bucket (by Owner)			
4	1	Stacked clothes washer/dryer (by Section 11 31 00)	1/2" H&CW; Standpipe W	20 A circuit - 120/1 - C&P (verify); 30 A circuit - 120/240/1 - C&P (verify)	4" diameter dryer vent Verify utility requirements for equipment by Others
5	5	Staff lockers (by Section 10 51 13)			
6	1	Detergent storage cabinet			
7	-	spare number			
8	10	Storage shelving			
9	3	Dunnage platform			
10	1	Walk-in cooler		20 A circuit - 120/1 (lights, temp. monitor/alarm, etc); Low voltage wiring from temperature monitor to BMS	Requires floor depression by GC
11	1	Walk-in freezer		20 A circuit - 120/1 (lights, temp. monitor/alarm, etc); Low voltage wiring from temperature monitor to BMS; 20 A circuit - 120/1 DR (heat trace)	Requires floor depression by GC
12a	1	Cooler condensing unit		6.5 A - 0.7 HP - 208/3	See Detail 1/6.1.01
12b	1	Cooler evaporator coil	1" IW to FD by KEC	2A - 120/1	Remote refrigeration by KEC from Item 12a
12c	1	Freezer condensing unit		11.3 A - 2.5 HP - 208/3	See Detail 1/6.1.01
12d	1	Freezer evaporator coil	1" IW to FD by KEC	8.2 A - 208/1	Remote refrigeration by KEC from Item 12c
13	10	Mobile shelving			
14	4	Mobile dunnage platform			
15	-	spare number			
16	2	Trash barrel (by Owner)			
17	1	Wall shelf			Requires wall blocking by GC in non-masonry walls
18	2	Utility cart			
19	1	Manual can opener			
20	1	Cook's table with sink	1/2" H&CW; 2" IW to FS	(4) 20 A circuit - 120/1 wall mounted convenience DR	
21	2	Mobile equipment stand			
22	1	Automatic slicer		5 A - 120/1 - C&P	
23	5	Hand sink	1/2" H&CW; 1-1/2" W		Requires wall blocking by GC in non-masonry walls
24	5	Waste bin (by Owner)			
25	1	Mobile work table			
26	1	Prep counter with sinks	1/2" H&CW; (2) 2" IW to FS	20 A circuit - 120/1 wall mounted convenience DR	
27	1	Food processor		12 A - 120/1 - C&P	
28	1	Mixer		8 A - 120/1 - C&P	
29	1	Wall shelf			Requires wall blocking by GC in non-masonry walls
30	-	spare number			
31	-	spare number			
32	1	Four-burner range w/ oven	3/4" G @ 143 MBTU (from Item 46)	0.1 A - 120/1 - C&P (from Item 46)	
33	1	Floor pan & grate	3" W conn 7" BFF		Requires floor depression by GC
34	1	Forty-gallon braising pan	1/2" G @ 144 MBTU (from Item 46); 1/2" H&CW (from Item 46)	5 A - 120/1 - C&P (from Item 46)	
35	1	Conveyor oven with mobile stand	3/4" G @ 40 MBTU (from Item 46);	1.5 A - 208/1 - C&P (from Item 46)	
36	-	spare number			
37	-	spare number			
38	-	spare number			
39	1	Water filter	3/4" CW (from Item 46)		
40	1	Twelve-pan steamer	(2) 1/2" G @ 27 MBTU (from Item 46); (2) 3/4" filtered CW (from Item 39); (2) 1" IW to FS	(2) 2 A - 120/1 - C&P (from Item 46)	
41	2	Double convection oven	3/4" G @ 100 MBTU (from Item 46)	(2) 8 A - 120/1 - C&P (from Item 46)	
42	-	spare number			
43	1	Fire suppression system		120/1; J-Box for connection to building alarm system & equipment shutdown	
44	1	Exhaust ventilator		Power to lights from Item 45	EXH LEFT: 4,469 total CFM thru (2) 10" x 21" collars @ -0.983" SP EXH RIGHT: 2,819 CFM thru a 10" x 27" collar @ -0.887" SP MUA LEFT: 3,356 total CFM thru (6) 10" x 24" collars @ 0.145" SP MUA RIGHT: 2,746 total CFM thru (4) 10" x 24" collars @ 0.173" SP Coordinate support from structure above for hood hangers by KEC
45	1	Ventilator demand control system		20 A circuit - 120/1 (see Note E-45/6.1.02)	
45a	1	Ventilator control interface		Cable from Item 45	Mounted in Item 46 control riser
45b	1	Room temperature sensor		Wiring from Item 45	
46	1	Utility distribution system	2" G @ 581 MBTU (1,175 MBTU sytem capacity); 3/4" H&CW	50 A circuit - 120/208/3	All electrical connectors and flexible water & gas connectors to associated equipment provided with system by KEC. (Field connections by Related Trades)
47	-	spare number			
48	-	spare number			
49	-	spare number			
50	2	Mobile pan racks			
51	2	Mobile utensil storage racks			
52	1	Clean ware table			
53	1	Warewasher, Ventless	1/2" HW; 1/2" CW (65˚F optimal); 1/2" CW (drain tempering); 1-1/2" IW to FS	45.4 A - 208/3	Section 22 00 01 to provide thermostatic mixing valve for machine cold water supply; Drain water tempering system provided by KEC
54	1	Three-compartment sink	(2) 3/4" 120°FH&CW; (3) 2" W manifold thru GI by PC		
55	1	Detergent system (by Owner's Vendor)	1/2" CW		
56	1	Wall shelf			
57	1	Disposer with control panel	(2) 1/2" CW; 2" W	3.3 A - 2 HP - 208/3	
58	1	Hose reel assembly	1/2" H&CW		
59	-	spare number			
60	-	spare number			
61	1	Mobile work table		(2) 20 A circuit - 120/1 wall mounted convenience DR	
62	-	spare number			
63	1	Mobile work table		(2) 20 A circuit - 120/1 wall mounted convenience DR	
64	1	Refrigerator, Reach-in		6.5 A - 120/1 - C&P	
65	1	Pass-thru hot food cabinet		6.3 A - 208/1 - C&P (NEMA 6-20P)	
66	-	spare number			
67	1	Pass-thru hot food cabinet		6.3 A - 208/1 - C&P (NEMA 6-20P)	
68	-	spare number			
69	-	spare number			
70	2	Fill faucet	1/2" HW		
71	8	Drop-in hot food wells (2 groups of 4)	1" IW to FS (per group)	4.0 KW - 208/1 (total per group)	
72	2	Drop-in cold pan	3/4" IW to FS	6.3 A - 120/1 - C&P (from mounted DR at serving counter)	
73	1	Serving counter		(2) 20 A circuit - 120/1 mounted DR by KEC	
73a	1	Food protector case			
73b	1	Food protector display case			
74	1	Serving counter		(3) 20 A circuit - 120/1 mounted DR by KEC	
74a	1	Food protector case			
74b	1	Food protector display case			
75	1	Milk cooler		3.3 A - 120/1 - C&P (from mounted DR at Item 74)	
76	2	Mobile condiment counter			
77	2	Mobile cashier stand			
78	2	Cashier terminal (by Owner)		120/1 - C&P; Data cable	
79	-	spare number			
80	1	Clean ware table			
81	1	Warewasher, Conveyor, Ventless with side loader (ADD ALT)	1/2" HW; 1/2" CW (50˚F min); 1/2" CW (drain tempering); 1-1/2" IW to FS	78 A - 208/3 (machine & tank heat); 58 A - 208/3 (integral booster heater)	Section 22 00 01 to provide thermostatic mixing valve for machine cold water supply; Drain water tempering system provided by KEC
82	-	spare number			
83	1	Soiled ware table w/ pass-window frame	2" W		
84	1	Hose reel assembly	1/2" H&CW		
85	1	Roll-down shutter			Requires rough wall opening by GC at pass window
86	-	spare number			

SCHEDULE NOTES

1) UTILITIES SHOWN IN THESE SCHEDULES ARE SPECIFIC TO THE PRIME MANUFACTURER LISTED IN THE WRITTEN SPECIFICATION SECTION 114000. IF EQUIPMENT FROM AN ALTERNATE MANUFACTURER IS PROVIDED, IT IS THE RESPONSIBILITY OF THE KITCHEN EQUIPMENT CONTRACTOR TO COORDINATE AND SUBMIT TO THE PROJECT DESIGN TEAM FOR REVIEW.

2) UTILITIES LISTED ON THIS SCHEDULE FOR OWNER FURNISHED OR VENDOR SUPPLIED EQUIPMENT ARE ESTIMATES ASSUMED FOR ENGINEERING PURPOSES ONLY. IT IS THE RESPONSIBILITY OF THE OWNER TO PROVIDE EQUIPMENT CUT SHEETS OF THIS EQUIPMENT TO CRABTREE-MCGRATH ASSOCIATES PRIOR TO CONSTRUCTION.

3) INSTALLING SUB-CONTRACTORS MUST NOTIFY CRABTREE-MCGRATH ASSOCIATES IF A UTILITY REQUIREMENT LISTED ON THIS EQUIPMENT SCHEDULE IS NOT AVAILABLE.

4) REFER TO THE ABBREVIATIONS NOTES PROVIDED ON THIS SHEET FOR CLARIFICATION OF ABBREVIATIONS USED WITHIN THIS EQUIPMENT SCHEDULE.

Abbreviations used:

A	Amperes	EXH	Exhaust	IW	Indirect waste
AFF	Above finished floor	FD	Floor drain	KEC	Kitchen Equip. Contractor
BFF	Below finished floor	FFD	Funnel floor drain	KW	Kilowatt
BTC	Branch to connection	FHW	Fahrenheit hot water	MBTU	BTU per hour/1000
C&P	Cord & plug provided	FS	Floor sink	MUA	Make-up air
CFM	Cubic feet per minute	G	Gas	PC	Plumbing Contractor
CR	Condensate return	GC	General Contractor	QD	Quick disconnect
CW	Cold water	GI	Grease interceptor	SP	Static pressure (WG)
DFA	Drop from above	HP	Horsepower	SR	Single receptacle
DR	Duplex receptacle	HW	Hot water	SS	Steam supply
EC	Electrical contractor	H&CW	Hot & cold water	W	Waste (direct connection)

AMESBURY ELEMENTARY SCHOOL

AMESBURY, MA

DINISCO DESIGN
architects + planners

99 Chauncy Street, Suite 901
Boston, MA 02111
(617) 426-2858

DGT Associates
Surveying & Engineers
1071 Worcester Road
Framingham, MA 01701
(508) 879-0030

Brown Sardina, Inc.
Landscape Architects
24 Roland Street
Boston, MA 02129
(617) 482-4703

Foley Buhl Roberts & Assoc., Inc.
Structural Engineers
2150 Washington Street
Newton, MA 02462
(617) 527-9600

Crabtree McGrath Assoc., Inc.
Food Service Consultants
161 West Main Street
Georgetown, MA 01833
(978) 352-8500

VAV International, Inc.
Mechanical Engineers
400 West Cummings Park S. 4700
Woburn, MA 01801
(781) 935-7228

Thompson Engineering Company, Inc.
Electrical Engineers
89 Newbury Street, Suite 103
Danvers, MA 01923
(617) 866-9066

EdVance Technology Design, Inc.
Technology Consultants
300 Brickstone Square, Suite 201
Andover, MA 01880
(978) 256-9900

KEY PLAN

NORTH ARROW: N, Called North

STAMP

Date: 21 August 2020

Drawn By: RM

Scale: 0 4 8

Revisions

Number	Date	Description

90% COST ESTIMATE SET

Foodservice Equipment Schedule

6.1.00

© 2020 DiNisco Design

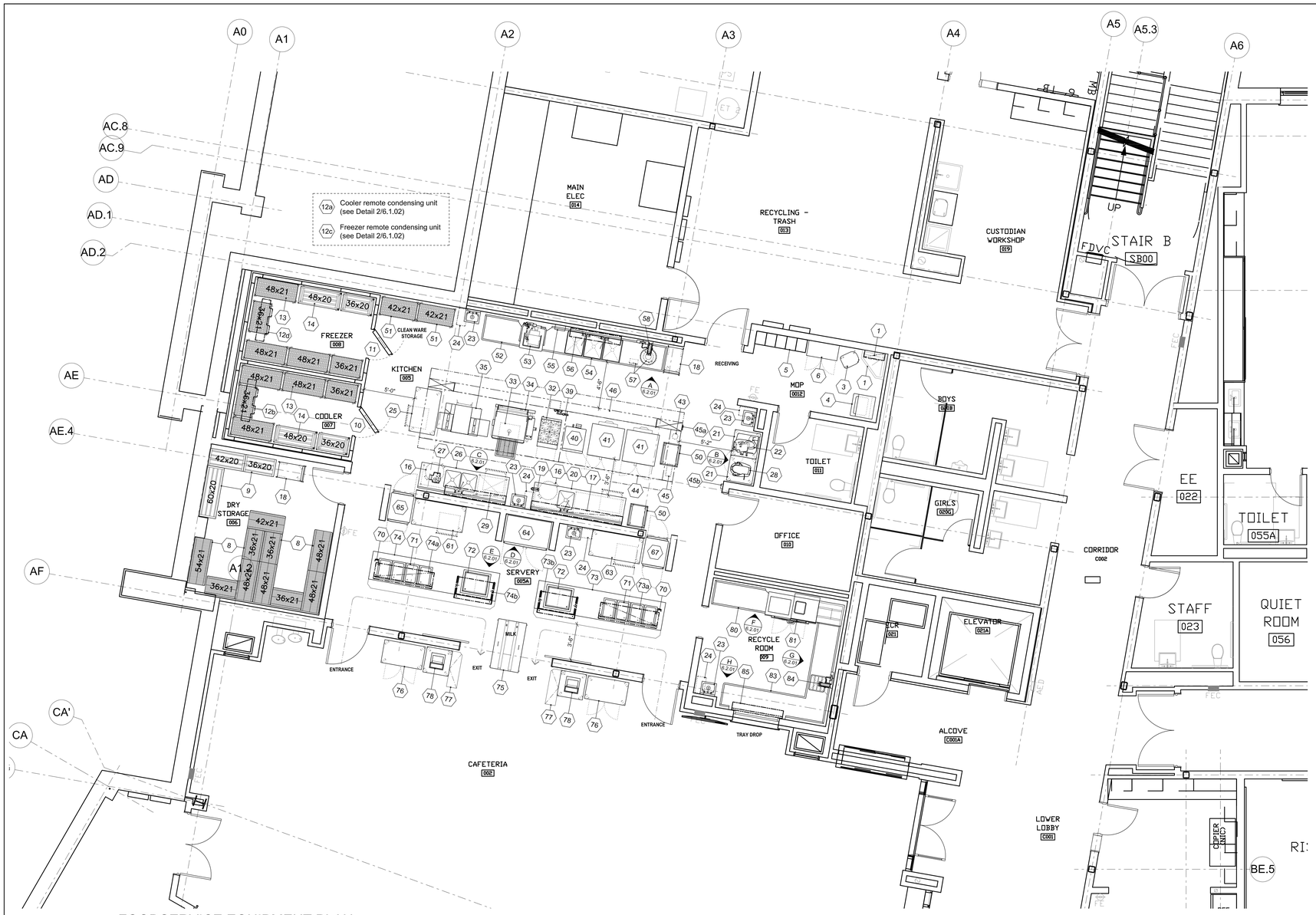

FOODSERVICE EQUIPMENT PLAN

Scale: 1/4" = 1'-0"

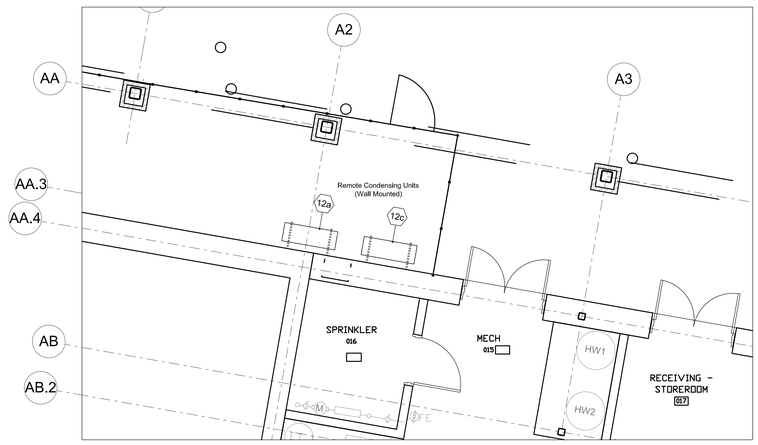

1 / 6.1.01 Detail - Exhaust Ventilator

Scale: 1/4" = 1'-0"

PLAN NOTES

1) IT IS THE RESPONSIBILITY OF THE KITCHEN EQUIPMENT CONTRACTOR TO FIELD VERIFY THE DELIVERY PATH OF ALL EQUIPMENT WITHIN THEUR SCOPE WITH BUILDING CONDITIONS PRIOR TO ORDERING TO CONFIRM ALL EQUIPMENT FITS WITHIN THE DESIGNATED SPACE AS LOCATED ON PLANS.

2) KITCHEN EQUIPMENT CONTRACTOR SHALL COORDINATE WITH THE GENERAL CONTRACTOR AS NECESSARY FOR OPENINGS IN BUILDING, WALL LEAVE OUTS, DOOR WIDTHS AND HEADER HEIGHTS REQUIRED FOR DELIVERY AND INSTALLATION MEANS.

3) FINISHES TO ALL WALLS, FLOORS AND CEILINGS ARE TO BE PROVIDED BY THE GENERAL CONTRACTOR AS SPECIFIED BY THE PROJECT ARCHITECT TO MEET THE REQUIREMENTS OF THE LOCAL HEALTH DEPARTMENT.

4) REVISIONS TO THESE PLANS DUE TO FIELD CONDITIONS MUST BE SUBMITTED TO THE PROJECT DESIGN TEAM FOR REVIEW AND APPROVAL PRIOR TO PROCEEDING WITH CONSTRUCTION.

5) FLOORING MATERIAL SPECIFIED BY THE ARCHITECT MUST BE PROVIDED WITH A COVED BASE AT ALL WALLS TO INCLUDE THE INTERIOR AND EXTERIOR OF WALK-IN REFRIGERATED ROOMS.

6) ALL FOODSERVICE EQUIPMENT AND CUSTOM FABRICATED ITEMS MUST MEET THE STANDARDS OF THE NATIONAL SANITATION FOUNDATION AND SHALL BE LABELED ACCORDINGLY.

Abbreviations used:

A	Amperes	EXH	Exhaust	IW	Indirect waste
AFF	Above finished floor	FD	Floor drain	KEC	Kitchen Equip. Contractor
BFF	Below finished floor	FFD	Funnel floor drain	KW	Kilowatt
BTC	Branch to connection	FHW	Fahrenheit hot water	MBTU	BTU per hour/1000
C&P	Cord & plug provided	FS	Floor sink	MUA	Make-up air
CFM	Cubic feet per minute	G	Gas	PC	Plumbing Contractor
CR	Condensate return	GC	General Contractor	QD	Quick disconnect
CW	Cold water	GI	Grease interceptor	SP	Static pressure (WG)
DFA	Drop from above	HP	Horsepower	SR	Single receptacle
DR	Duplex receptacle	HW	Hot water	SS	Steam supply
EC	Electrical contractor	H&CW	Hot & cold water	W	Waste (direct connection)

AMESBURY ELEMENTARY SCHOOL

AMESBURY, MA

DINISCO DESIGN
architects + planners

99 Chauncy Street, Suite 901
Boston, MA 02111
(617) 426-2858

DGT Associates
Surveying & Engineers
1071 Worcester Road
Framingham, MA 01701
(508) 879-0030

Brown Sardina, Inc.
Landscape Architects
24 Roland Street
Boston, MA 02129
(617) 482-4703

Foley Buhl Roberts & Assoc., Inc.
Structural Engineers
2150 Washington Street
Newton, MA 02462
(617) 527-9600

Crabtree McGrath Assoc., Inc.
Food Service Consultants
161 West Main Street
Georgetown, MA 01833
(978) 352-8500

VAV International, Inc.
Mechanical Engineers
400 West Cummings Park S. 4700
Woburn, MA 01801
(781) 935-7228

Thompson Engineering Company, Inc.
Electrical Engineers
89 Newbury Street, Suite 103
Danvers, MA 01923
(617) 866-9066

EdVance Technology Design, Inc.
Technology Consultants
300 Brickstone Square, Suite 201
Andover, MA 01880
(978) 256-9900

KEY PLAN

N Called North

NORTH ARROW | STAMP

Date: 21 August 2020

Drawn By: RM

Scale: 0 4 8

Revisions

Number	Date	Description

90% COST ESTIMATE SET

Foodservice Equipment Plan

6.1.01

© 2020 DiNisco Design

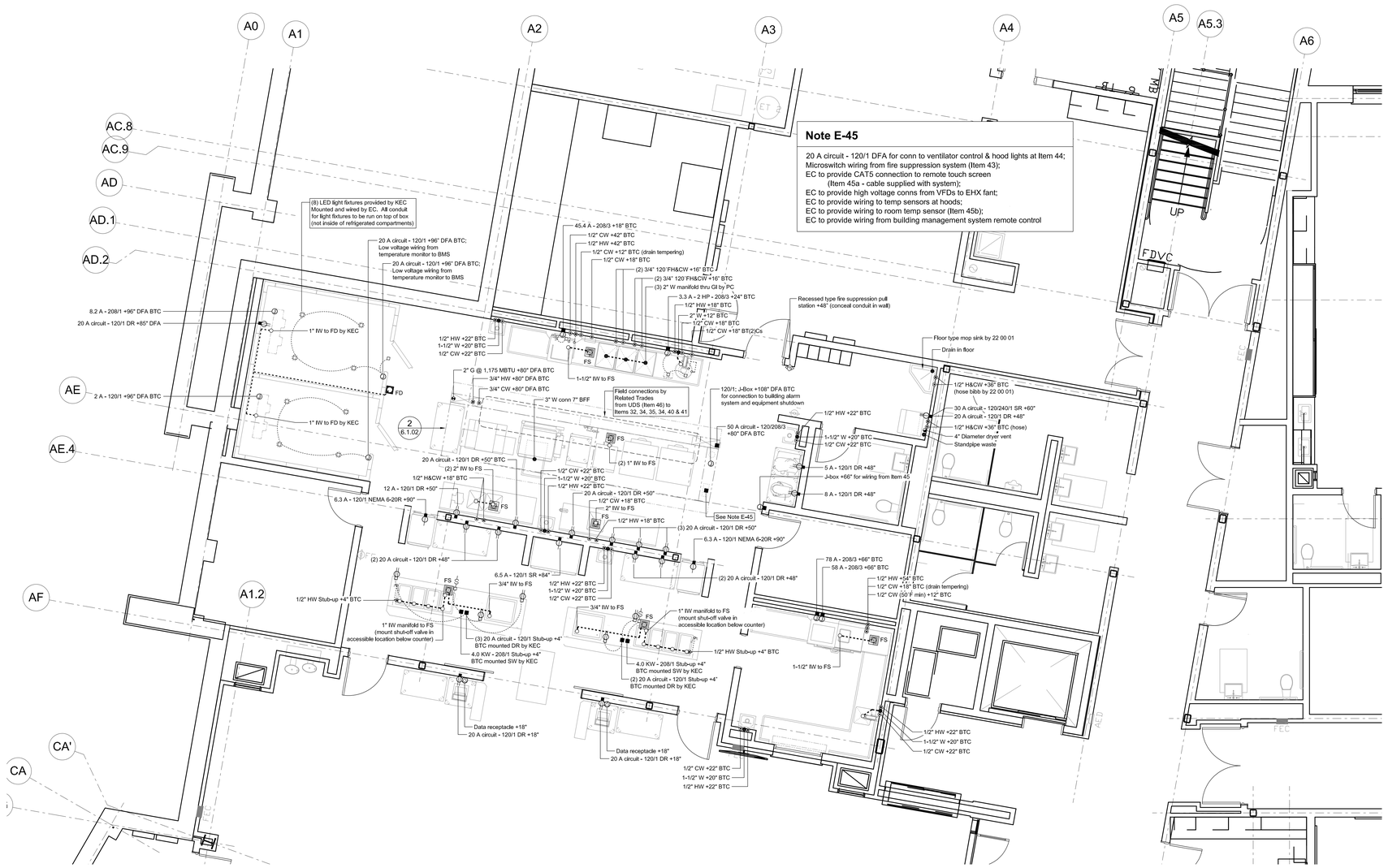

FOODSERVICE EQUIPMENT ROUGH-IN PLAN

Scale: 1/4" = 1'-0"

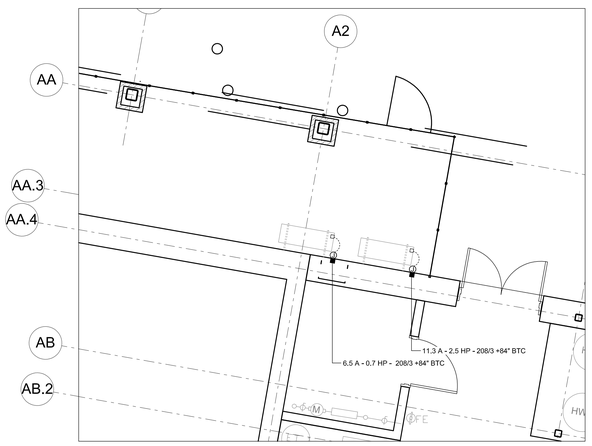

1 6.1.02 Detail - Exhaust Ventilator

Scale: 1/4" = 1'-0"

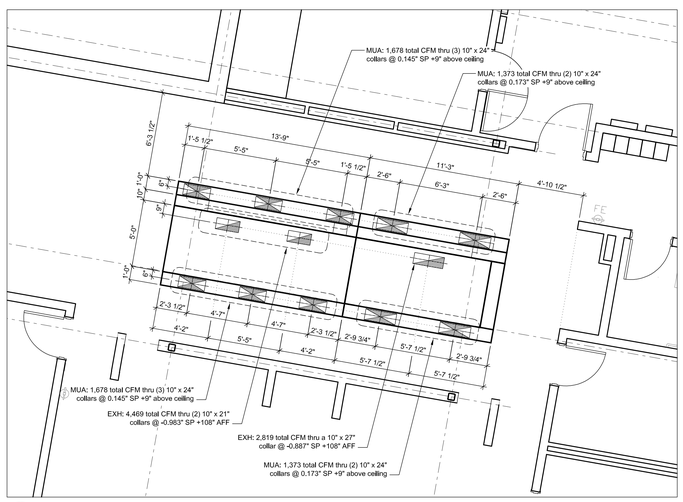

2 6.1.02 Detail - Exhaust Hood Ventilation Rough-in Plan

Scale: 1/4" = 1'-0"

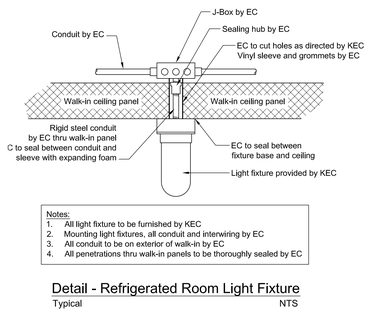

Notes:
1. All light fixture to be furnished by KEC
2. Mounting light fixtures, all conduit and interwiring by EC
3. All conduit to be on exterior of walk-in by EC
4. All penetrations thru walk-in panels to be thoroughly sealed by EC

Detail - Refrigerated Room Light Fixture

Typical NTS

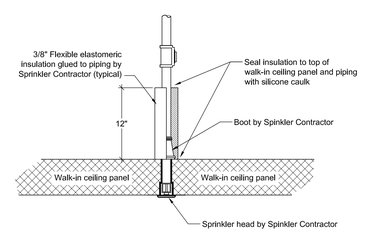

Detail - Refrigerated Room Fire Spinkler

Typical NTS

PLUMBING ROUGH-IN LEGEND	
✱	HOT WATER
✱	COLD WATER
●	WASTE - DIRECT CONNECTED
○	WASTE - INDIRECT
⊖	GAS
	AREA FD (SUGGESTED LOCATION)
	FLOOR DRAIN
	FUNNEL FLOOR DRAIN
	FLOOR SINK
	FLOOR SINK (3/4 GRATE)
	FLOOR SINK (1/2 GRATE)
◦	FIELD CONNECTION
	FIELD PIPING (WASTE)
	FIELD PIPING (WATER)

ELECTRICAL ROUGH-IN LEGEND	
	DUPLEX RECEPTACLE
	DUPLEX RECEPTACLE (TABLE MOUNTED)
	SIMPLEX RECEPTACLE
	SIMPLEX RECEPTACLE (TABLE MOUNTED)
	SPECIAL PURPOSE RECEPTACLE
	FLOOR RECEPTACLE
	JUNCTION BOX
	DROP CORD
■	ELECTRICAL CONDUIT
□	FIELD CONNECTION
	SWITCH
	LIGHT FIXTURE
	FIRE PULL STATION
	FIELD WIRING

ELECTRICAL NOTES

1) DIMENSIONS ON THIS PLAN ARE PROVIDED FOR DESIGN INTENT. IT IS THE RESPONSIBILITY OF THE KITCHEN EQUIPMENT CONTRACTOR TO VERIFY AND COORDINATE ALL DIMENSIONS AND HEIGHTS LISTED IN THE FIELD WITH THE EQUIPMENT BEING PROVIDED.
2) ELECTRICAL CONTRACTOR IS RESPONSIBLE FOR ALL FINAL CONNECTIONS TO EQUIPMENT THAT REQUIRES A BRANCH TO CONNECTION (BTC), OR WHERE INTER-WIRING IS INDICATED ON THE PLAN IN A DASHED LINE.
3) ELECTRICAL CONTRACTOR IS RESPONSIBLE FOR REVIEWING ALL MANUFACTURER'S SHOP DRAWINGS AND EQUIPMENT CUT SHEETS SUBMITTED TO CONFIRM SCOPE REQUIREMENTS AND EXPECTATIONS.
4) ELECTRICAL PANELS PROVIDED SHALL BE DESIGNED WITH A MINIMUM OF 20% SPARE CAPACITY FOR FUTURE EXPANSION UNLESS OTHERWISE APPROVED BY THE OWNER.
5) ELECTRICAL CONTRACTOR TO INSTALL DROP CORDS AS LOCATED ON PLANS WITH THE CORD ADJUSTED TO HANG 78" ABOVE FINISH FLOOR. PLASTIC WIRE TIES ARE NOT ACCEPTABLE FOR THIS WORK. DROP CORDS MUST BE PROVIDED WITH STRAIN RELIEF.
6) ELECTRICAL CONNECTIONS ON THIS PLAN ARE PROVIDED AS IT RELATES SPECIFICALLY TO FOODSERVICE EQUIPMENT. CONVENIENCE OUTLETS ARE PROVIDED IN SPECIFIC LOCATIONS AS REQUESTED BY OWNER. IT IS THE RESPONSIBILITY OF THE ELECTRICAL CONTRACTOR TO PROVIDE AND INSTALL ANY OTHER ELECTRICAL OUTLETS AS REQUIRED TO MEET CODE REQUIREMENTS BY LOCAL AUTHORITY HAVING JURISDICTION.
7) WALK-IN REFRIGERATED ROOM LIGHT FIXTURES ARE TO BE PROVIDED BY THE KITCHEN EQUIPMENT CONTRACTOR. LIGHTS ARE TO BE MOUNTED AND INSTALLED BY THE ELECTRICAL CONTRACTOR.
8) IT IS THE RESPONSIBILITY OF THE KITCHEN EQUIPMENT CONTRACTOR TO CONFIRM WITH THE WALK-IN REFRIGERATED ROOM MANUFACTURER THAT THE QUANTITY AND LOCATIONS OF THE LIGHTING LAYOUT WILL MEET 20 FOOT CANDLES OF LIGHT AT A DISTANCE OF 30" ABOVE FINISH FLOOR AS REQUIRED IN WALK-IN REFRIGERATED ROOMS BY THE NATIONAL FOOD CODE.
9) DRAIN PIPING WITHIN A WALK-IN FREEZER SHALL BE PROVIDED WITH A DRAIN LINE HEATER AND INSULATION. FINAL CONNECTION OF THE DRAIN LINE HEATER MUST BE PROVIDED BY THE ELECTRICAL CONTRACTOR.
10) ELECTRICAL CONTRACTOR TO INSTALL UTILITIES CONCEALED IN WALLS AND STUB-OUT AT TERMINATION POINTS.
11) ELECTRICAL CONTRACTOR TO PROVIDE AND INSTALL WIRING BETWEEN EXHAUST VENTILATORS AND ASSOCIATED FAN SYSTEMS, CONTROL PANELS, MAGNETIC STARTERS, FIRE SUPPRESSION SYSTEMS, PULL STATIONS AND SWITCHES AS REQUIRED.
12) CONTROL AND POWER WIRING BETWEEN CONTROL PANELS AND GARBAGE DISPOSALS, WASTE PULPERS, TROUGH COLLECTORS ETC. ARE TO BE PROVIDED AND INSTALLED BY THE ELECTRICAL CONTRACTOR.
13) ELECTRICAL CONTRACTOR MUST PROVIDE ELECTRICAL POWER TO ANY COOKING EQUIPMENT THROUGH A SHUNT TRIP SYSTEM.
14) FOOD PREPARATION AREAS MUST BE PROVIDED WITH 50 FOOT CANDLES OF LIGHTING AS REQUIRED BY THE NATIONAL FOOD CODE.
15) ELECTRICAL CONTRACTOR MUST VERIFY REMOTE FIRE SUPPRESSION PULL STATION LOCATIONS WITH THE LOCAL FIRE INSPECTOR PRIOR TO INSTALLATION.
16) FOODSERVICE EQUIPMENT CAN NOT BLOCK ACCESS TO GFI RECEPTACLES. CRABTREE-MCGRATH ASSOCIATES STRONGLY RECOMMENDS THAT THE ELECTRICAL CONTRACTOR PROVIDE GFI PROTECTION AT THE CIRCUIT BREAKER PANEL. THIS WILL ALSO LIMIT NUISANCE TRIPPING THAT IS COMMON WITH COMMERCIAL FOODSERVICE EQUIPMENT.

PLUMBING NOTES

1) DIMENSIONS ON THIS PLAN ARE PROVIDED FOR DESIGN INTENT. IT IS THE RESPONSIBILITY OF THE KITCHEN EQUIPMENT CONTRACTOR TO VERIFY AND COORDINATE ALL DIMENSIONS AND HEIGHTS LISTED IN THE FIELD WITH THE EQUIPMENT BEING PROVIDED.
2) PLUMBING CONTRACTOR IS RESPONSIBLE FOR ALL FINAL CONNECTIONS TO EQUIPMENT THAT REQUIRE A BRANCH TO CONNECTION (BTC), OR WHERE PLUMBING INTERCONNECTION IS INDICATED ON THE PLAN WITH A DASHED LINE.
3) PLUMBING CONTRACTOR IS RESPONSIBLE FOR REVIEWING ALL MANUFACTURER'S SHOP DRAWINGS AND EQUIPMENT CUT SHEETS SUBMITTED TO CONFIRM SCOPE REQUIREMENTS AND INSTALLATION EXPECTATIONS.
4) ALL FLOOR SINKS AND DRAINS MUST BE PROVIDED AND INSTALLED BY THE PLUMBING CONTRACTOR. AREA DRAINS, IF LOCATED ON THESE PLANS, ARE TO BE CONSIDERED RECOMMENDED AREAS. IT IS THE RESPONSIBILITY OF THE PLUMBING CONTRACTOR TO CONFIRM QUANTITIES AND LOCATIONS OF AREA DRAINS WITH THE LOCAL AUTHORITY HAVING JURISDICTION.
5) FLOOR SINKS LOCATED UNDER COUNTERS WITH LIMITED ACCESSIBILITY MUST BE INSTALLED 50% EXPOSED AND EASILY ACCESSIBLE FOR CLEANING. IF A FLOOR SINK CAN NOT BE INSTALLED 50% EXPOSED, THE UNDER SHELF OF THE CABINET MUST BE FULLY REMOVABLE OR BE PROVIDED WITH AN ACCESS PANEL LARGE ENOUGH TO REMOVE THE DRAIN GRATE FOR CLEANING.
6) CONDENSATE DRAIN LINES FROM WALK-IN REFRIGERATED ROOM EVAPORATOR COILS SHALL BE INSTALLED BY THE KITCHEN EQUIPMENT CONTRACTOR. DRAIN LINES MUST BE COPPER AND INSTALLED 1" OFF THE WALLS WITH A MINIMUM PITCH OF 1/2" PER FOOT. PLUMBING CONTRACTOR TO PROVIDE AND INSTALL A COPPER UNION WITHIN 24" OF THE CONNECTION TO THE EVAPORATOR COIL. FOR INSTALLATION OF DRAIN LINES IN A FREEZER, THE DRAIN SHALL EXIT THE FREEZER AT THE EARLIEST DISTANCE POSSIBLE. DRAIN PENETRATIONS THROUGH THE WALK-IN REFRIGERATED ROOM WALL PANEL MUST BE APPROPRIATELY SEALED TO INCLUDE A VAPOR SEAL AND PROVIDED WITH CHROME ESCUTCHEON PLATES AT ALL EXPOSED POINTS WHERE PIPING PENETRATES THE WALL. DRAINS MUST BE "P" TRAPPED OUTSIDE OF THE REFRIGERATED ROOM WALL TO AVOID ENTRANCE OF WARM AIR AND TERMINATED 1" ABOVE THE FLOOR DRAIN OR AS REQUIRED BY LOCAL CODE.
7) PLUMBING CONTRACTOR TO INSTALL UTILITIES CONCEALED IN WALLS AND STUB-OUT AT TERMINATION POINTS. PLEASE NOTE THAT NOT ALL JURISDICTIONS ALLOW GAS LINES TO BE CONCEALED IN WALL, IT IS THE RESPONSIBILITY OF THE PLUMBING CONTRACTOR TO VERIFY AND CONFIRM PRIOR TO INSTALLATION.
8) PLUMBING CONTRACTOR IS RESPONSIBLE FOR INSTALLATION OF ALL DRAINS, FAUCETS, PIPING TRAPS, VALVES, SHUT-OFFS, GAUGES, WATER PRESSURE REDUCERS, REGULATORS AND BACKFLOW PREVENTION, ETC. AS REQUIRED BY LOCAL AUTHORITY HAVING JURISDICTION.
9) IT IS THE RESPONSIBILITY OF THE PLUMBING CONTRACTOR TO FLUSH ALL WATER LINES PRIOR TO FINAL CONNECTION TO FOODSERVICE EQUIPMENT.
10) A MAIN SHUT-OFF GAS VALVE MUST BE INSTALLED BY THE PLUMBING CONTRACTOR LOCATED TO MEET THE REQUIREMENTS OF THE PLUMBING CODE.
11) GAS SUPPLY TO ALL COOKING EQUIPMENT MUST BE PROVIDED WITH AN ELECTRIC OR MECHANICAL SHUT-OFF VALVE. KITCHEN EQUIPMENT CONTRACTOR SHALL FURNISH THE VALVE AND INSTALLATION PERFORMED BY THE PLUMBING CONTRACTOR. VALVE SHALL BE TIED INTO THE FIRE PROTECTION SYSTEM FOR AUTOMATIC SHUT-OFF.
12) THE PLUMBING CONTRACTOR IS RESPONSIBLE FOR LOCATION OF GREASE TRAPS AS REQUIRED BY LOCAL AUTHORITY HAVING JURISDICTION. GREASE TRAPS MUST BE LOCATED IN A MANNER THAT DOES NOT INTERFERE WITH FOODSERVICE EQUIPMENT LAYOUT.

Abbreviations used:

A	Amperes	EXH	Exhaust	IW	Indirect waste
AFF	Above finished floor	FD	Floor drain	KEC	Kitchen Equip. Contractor
BFF	Below finished floor	FFD	Funnel floor drain	KW	Kilowatt
BTC	Branch to connection	FHW	Fahrenheit hot water	MBTU	BTU per hour/1000
C&P	Cord & plug provided	FS	Floor sink	MUA	Make-up air
CFM	Cubic feet per minute	G	Gas	PC	Plumbing Contractor
CR	Condensate return	GC	General Contractor	QD	Quick disconnect
CW	Cold water	GI	Grease interceptor	SP	Static pressure (WG)
DFA	Drop from above	HP	Horsepower	SR	Single receptacle
DR	Duplex receptacle	HW	Hot water	SS	Steam supply
EC	Electrical contractor	H&CW	Hot & cold water	W	Waste (direct connection)

AMESBURY ELEMENTARY SCHOOL

AMESBURY, MA

DINISCO DESIGN
architects + planners
99 Chauncy Street, Suite 901
Boston, MA 02111
(617) 426-2858

DGT Associates
Surveying & Engineers
1071 Worcester Road
Framingham, MA 01701
(508) 879-0030

Brown Sardina, Inc.
Landscape Architects
24 Roland Street
Boston, MA 02129
(617) 482-4703

Foley Buhl Roberts & Assoc., Inc.
Structural Engineers
2150 Washington Street
Newton, MA 02462
(617) 527-9600

Crabtree McGrath Assoc., Inc.
Food Service Consultants
161 West Main Street
Georgetown, MA 01833
(978) 352-8500

VAV International, Inc.
Mechanical Engineers
400 West Cummings Park S. 4700
Woburn, MA 01801
(781) 935-7228

Thompson Engineering Company, Inc.
Electrical Engineers
89 Newbury Street, Suite 103
Danvers, MA 01923
(617) 866-9066

EdVance Technology Design, Inc.
Technology Consultants
300 Brickstone Square, Suite 201
Andover, MA 01880
(978) 256-9900

KEY PLAN



NORTH ARROW STAMP

Date: 21 August 2020

Drawn By: RM

Scale: 0 4 8

Revisions

Number	Date	Description

90% COST ESTIMATE SET

Foodservice Equipment Rough-in Plan

6.1.02

© 2020 DiNisco Design

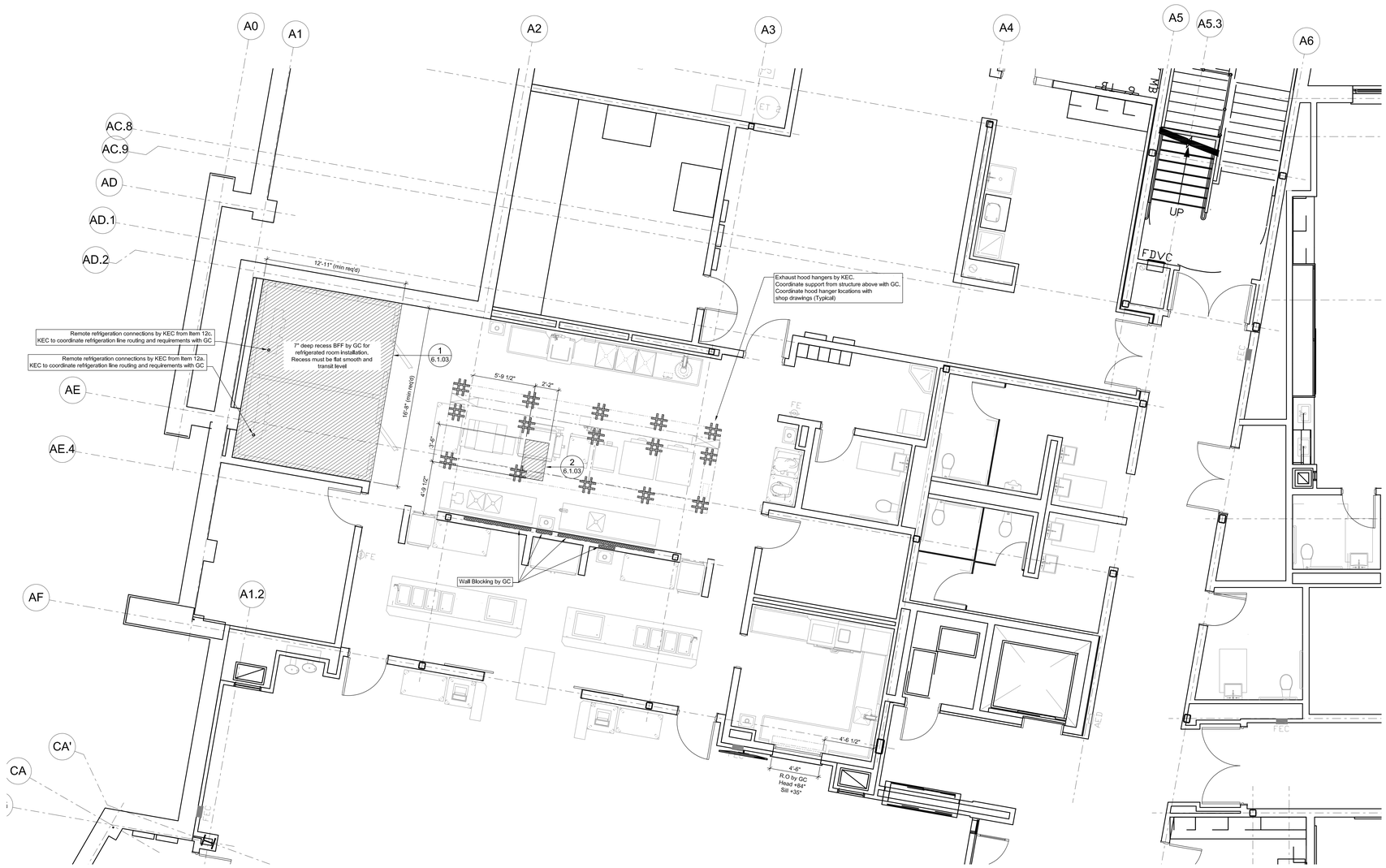

FOODSERVICE EQUIPMENT SPECIAL CONDITIONS PLAN

Scale: 1/4" = 1'-0"

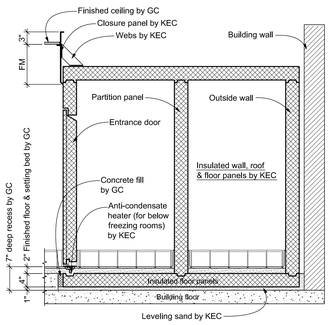

1 6.1.03 Section - Refrigerated Rooms
NTS

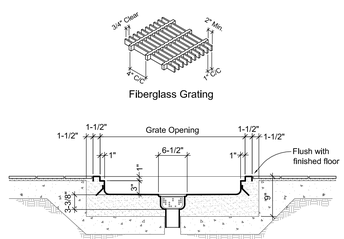

2 6.1.03 Detail - Floor Pan & Grate
NTS

SPECIAL CONDITIONS NOTES

1) DIMENSIONS ON THIS PLAN ARE PROVIDED FOR DESIGN INTENT. IT IS THE RESPONSIBILITY OF THE KITCHEN EQUIPMENT CONTRACTOR TO VERIFY AND COORDINATE ALL DIMENSIONS AND HEIGHTS LISTED IN THE FIELD WITH THE EQUIPMENT BEING PROVIDED.

2) WALK-IN REFRIGERATED ROOM SLAB DEPRESSIONS MUST BE SMOOTH AND LEVEL, SIZED AS SHOWN ON PLAN.

3) THE GENERAL CONTRACTOR IS RESPONSIBLE FOR PROVIDING WALL BLOCKING AS INDICATED FOR SUPPORTING WALL MOUNTED EQUIPMENT. KITCHEN EQUIPMENT CONTRACTOR SHALL VERIFY AND COORDINATE ALL LOCATIONS AND HEIGHTS PROVIDED IN THE FIELD.

4) WALL FLASHING, WHERE SPECIFIED, MUST BE A MINIMUM OF 20 GAUGE STAINLESS STEEL, PROVIDED AND INSTALLED BY THE KITCHEN EQUIPMENT CONTRACTOR. STAINLESS STEEL TO BE CUT IN THE LARGEST SHEETS POSSIBLE TO MINIMIZE JOINTS. ALL SEAMS TO BE COVERED WITH BATTEN STRIPS AND CAP STRIPS PROVIDED AT FLASHING ENDS. PROVIDE CAREFULLY PUNCHED HOLES AT SERVICE LOCATIONS. ALL WALL FLASHING DIMENSIONS MUST BE FIELD VERIFIED BY THE KITCHEN EQUIPMENT CONTRACTOR PRIOR TO FABRICATION.

5) CORNER GUARDS, WHERE SPECIFIED, MUST BE A MINIMUM OF 14 GAUGE STAINLESS STEEL PROVIDED AND INSTALLED BY THE KITCHEN EQUIPMENT CONTRACTOR. BREAK LONG EDGES SO THAT THE GUARDS "HUG" THE WALL AND SECURE TO THE WALL WITH A SUITABLE ADHESIVE. ALL CORNER GUARD DIMENSIONS AND ANGLES MUST BE FIELD VERIFIED BY THE KITCHEN EQUIPMENT CONTRACTOR PRIOR TO FABRICATION.

6) KITCHEN EQUIPMENT CONTRACTOR IS RESPONSIBLE FOR THE INSTALLATION OF THE REMOTE REFRIGERATION LINE RUNS AND COORDINATION OF THE COMPLETE REMOTE REFRIGERATION SYSTEM WITH THE GENERAL CONTRACTOR.

7) EXHAUST HOODS MUST BE HUNG AND MOUNTED WITH THE BOTTOM OF THE HOOD AT 6'-8" ABOVE FINISH FLOOR. HVAC CONTRACTOR IS RESPONSIBLE FOR FINAL CONNECTIONS FROM THE EXHAUST HOOD COLLAR TO THE DUCTWORK. FINAL CONNECTIONS SHALL BE FULLY WELDED AND LIQUID TIGHT.

8) HVAC CONTRACTOR TO PROVIDE AND INSTALL ALL FANS, DUCTWORK AND CURBS AS REQUIRED FOR A COMPLETE AND FUNCTIONING VENTILATION SYSTEM. START-UP AND AIR BALANCING OF THESE SYSTEMS MUST BE COMPLETED BY THE HVAC CONTRACTOR.

Abbreviations used:

A	Amperes	EXH	Exhaust	IW	Indirect waste
AFF	Above finished floor	FD	Floor drain	KEC	Kitchen Equip. Contractor
BFF	Below finished floor	FFD	Funnel floor drain	KW	Kilowatt
BTC	Branch to connection	FHW	Fahrenheit hot water	MBTU	BTU per hour/1000
C&P	Cord & plug provided	FS	Floor sink	MUA	Make-up air
CFM	Cubic feet per minute	G	Gas	PC	Plumbing Contractor
CR	Condensate return	GC	General Contractor	QD	Quick disconnect
CW	Cold water	GI	Grease interceptor	SP	Static pressure (WG)
D/A	Drop from above	HP	Horsepower	SR	Single receptacle
DR	Duplex receptacle	HW	Hot water	SS	Steam supply
EC	Electrical contractor	H&CW	Hot & cold water	W	Waste (direct connection)

AMESBURY ELEMENTARY SCHOOL

AMESBURY, MA

DINISCO DESIGN architects + planners
99 Chauncy Street, Suite 901
Boston, MA 02111
(617) 426-2858

DGT Associates
Surveying & Engineers
1071 Worcester Road
Framingham, MA 01701
(508) 879-0030

Brown Sardina, Inc.
Landscape Architects
24 Roland Street
Boston, MA 02129
(617) 482-4703

Foley Buhl Roberts & Assoc., Inc.
Structural Engineers
2150 Washington Street
Newton, MA 02462
(617) 527-9600

Crabtree McGrath Assoc., Inc.
Food Service Consultants
161 West Main Street
Georgetown, MA 01833
(978) 352-8500

VAV International, Inc.
Mechanical Engineers
400 West Cummings Park S. 4700
Woburn, MA 01801
(781) 935-7228

Thompson Engineering Company, Inc.
Electrical Engineers
89 Newbury Street, Suite 103
Danvers, MA 01923
(617) 866-9066

EdVance Technology Design, Inc.
Technology Consultants
300 Brickstone Square, Suite 201
Andover, MA 01880
(978) 256-9900

KEY PLAN

N Called North

NORTH ARROW | STAMP

Date: 21 August 2020

Drawn By: RM

Scale: 0 4 8

Revisions

Number	Date	Description

90% COST ESTIMATE SET

Foodservice Equipment Special Conditions Plan

6.1.03

© 2020 DiNisco Design

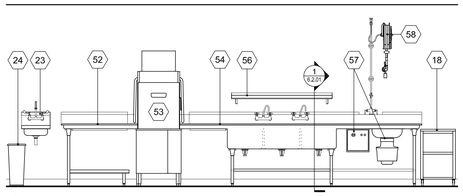

A 6.2.01 Elevation - Utensil Washing
Scale: 3/8" = 1'-0"

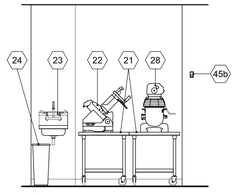

B 6.2.01 Elevation - Mobile Equipment Stands
Scale: 3/8" = 1'-0"

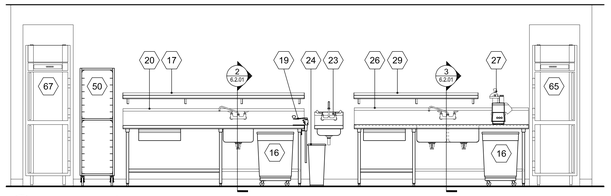

C 6.2.01 Elevation - Cook's Table and Prep Table
Scale: 3/8" = 1'-0"

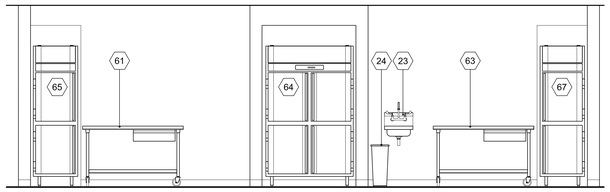

D 6.2.01 Elevation - Mobile Work Tables
Scale: 3/8" = 1'-0"

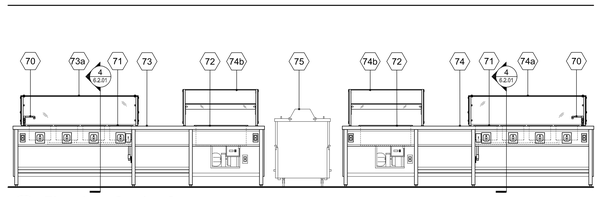

E 6.2.01 Elevation - Serving Counters
Scale: 3/8" = 1'-0"

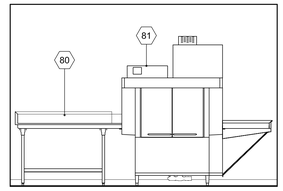

F 6.2.01 Elevation - Ware Washing
Scale: 3/8" = 1'-0"

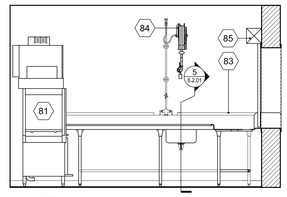

G 6.2.01 Elevation - Ware Washing
Scale: 3/8" = 1'-0"

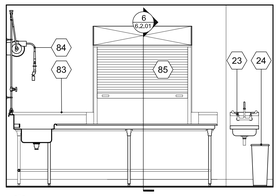

H 6.2.01 Elevation - Ware Washing
Scale: 3/8" = 1'-0"

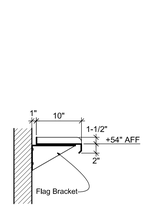

Section - Wall Shelf
Typical 1" = 1'-0"

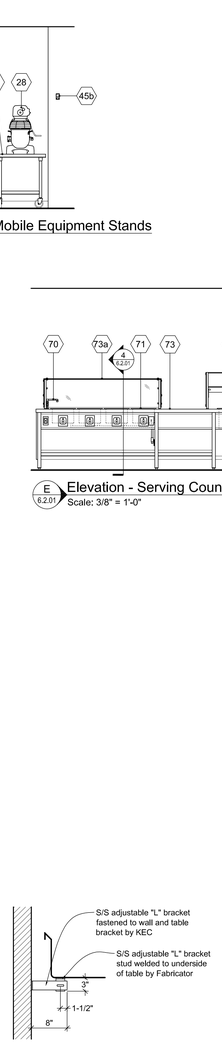

Detail - Counter Wall Bracket
Typical NTS

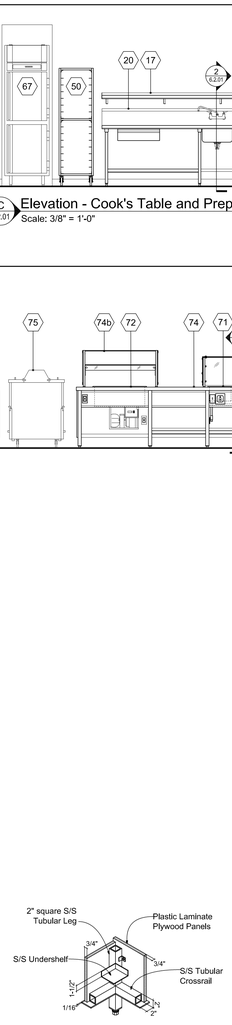

Detail - Serving Counter Corner
Typical NTS

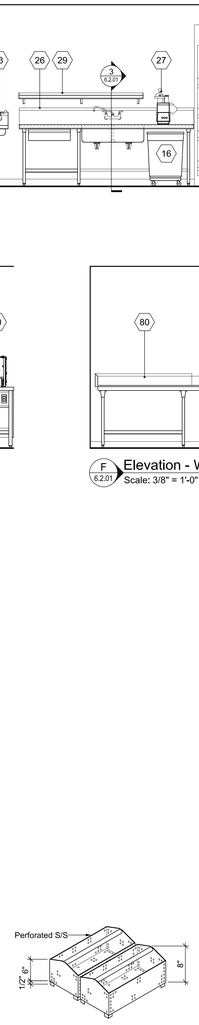

Section - Wall Shelf
Part of Item 37 NTS

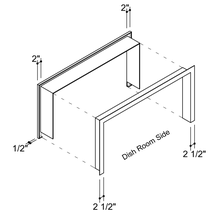

Detail - Pass Window Frame
Part of Item 37 NTS

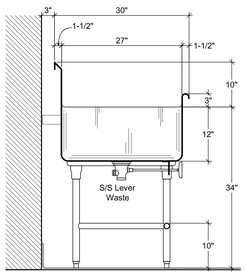

1 6.2.01 Section - Pot Washing Sink
Scale: 1" = 1'-0"

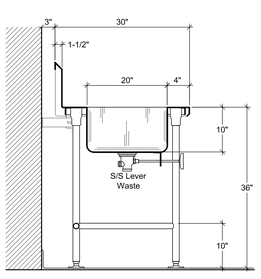

2 6.2.01 Section - Cook's Table @ Sink
Scale: 1" = 1'-0"

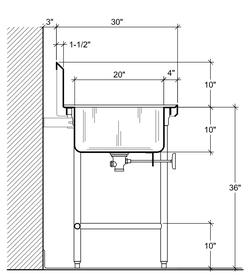

3 6.2.01 Section - Prep Counter @ Sink
Scale: 1" = 1'-0"

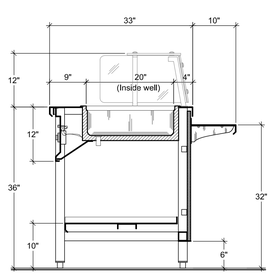

4 6.2.01 Section - Serving Counter @ Hot Well
Scale: 1" = 1'-0"

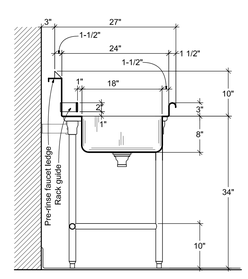

5 6.2.01 Section - Soiled Ware Table @ Sink
Scale: 1" = 1'-0"

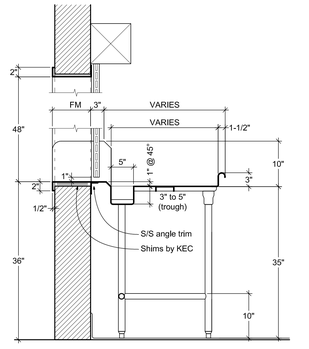

6 6.2.01 Section - Soiled Ware Table @ Pass Window
Scale: 1" = 1'-0"

Abbreviations used:

A	Amperes	EXH	Exhaust	IW	Indirect waste
AFF	Above finished floor	FD	Floor drain	KEC	Kitchen Equip. Contractor
BFF	Below finished floor	FTD	Funnel floor drain	KW	Kilowatt
BTC	Branch to connection	FHW	Fahrenheit hot water	MBTU	BTU per hour/1000
C&P	Cord & plug provided	FS	Floor sink	MUA	Make-up air
CFM	Cubic feet per minute	G	Gas	PC	Plumbing Contractor
CR	Condensate return	GC	General Contractor	QD	Quick disconnect
CW	Cold water	GI	Grease interceptor	SP	Static pressure (WG)
DFA	Drop from above	HP	Horsepower	SR	Single receptacle
DR	Duplex receptacle	HW	Hot water	SS	Steam supply
EC	Electrical contractor	H&CW	Hot & cold water	W	Waste (direct connection)

AMESBURY ELEMENTARY SCHOOL

AMESBURY, MA

DINISCO DESIGN
architects + planners

99 Chauncy Street, Suite 901
Boston, MA 02111
(617) 426-2858

DGT Associates
Surveying & Engineers
1071 Worcester Road
Framingham, MA 01701
(508) 879-0030

Brown Sardina, Inc.
Landscape Architects
24 Roland Street
Boston, MA 02129
(617) 482-4703

Foley Buhl Roberts & Assoc., Inc.
Structural Engineers
2150 Washington Street
Newton, MA 02462
(617) 527-9600

Crabtree McGrath Assoc., Inc.
Food Service Consultants
161 West Main Street
Georgetown, MA 01833
(978) 352-8500

VAV International, Inc.
Mechanical Engineers
400 West Cummings Park S. 4700
Woburn, MA 01801
(781) 935-7228

Thompson Engineering Company, Inc.
Electrical Engineers
89 Newbury Street, Suite 103
Danvers, MA 01923
(617) 866-9066

EdVance Technology Design, Inc.
Technology Consultants
300 Brickstone Square, Suite 201
Andover, MA 01880
(978) 256-9900

KEY PLAN

NORTH ARROW — STAMP

Date: 21 August 2020

Drawn By: RM

Scale: 0 4 8

Revisions

Number	Date	Description

90% COST ESTIMATE SET

Foodservice Equipment Details

6.2.01

© 2020 DiNisco Design

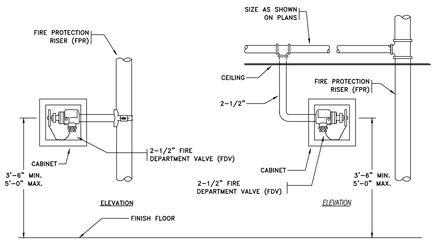

A 7.0.01 *FDV IN CABINET DETAIL*
NOT TO SCALE

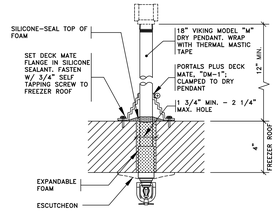

B 7.0.01 *DRY PENDENT SPRINKLER DETAIL (WALK-IN COOLER/FREEZER)*
NOT TO SCALE

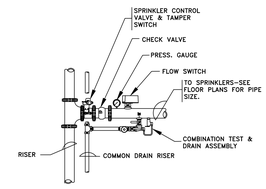

C 7.0.01 SPRINKLER CONTROL VALVE ZONE ASSEMBLY
NOT TO SCALE

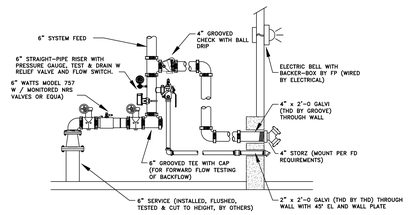

D 7.0.01 *DCVA DETAIL*
NOT TO SCALE

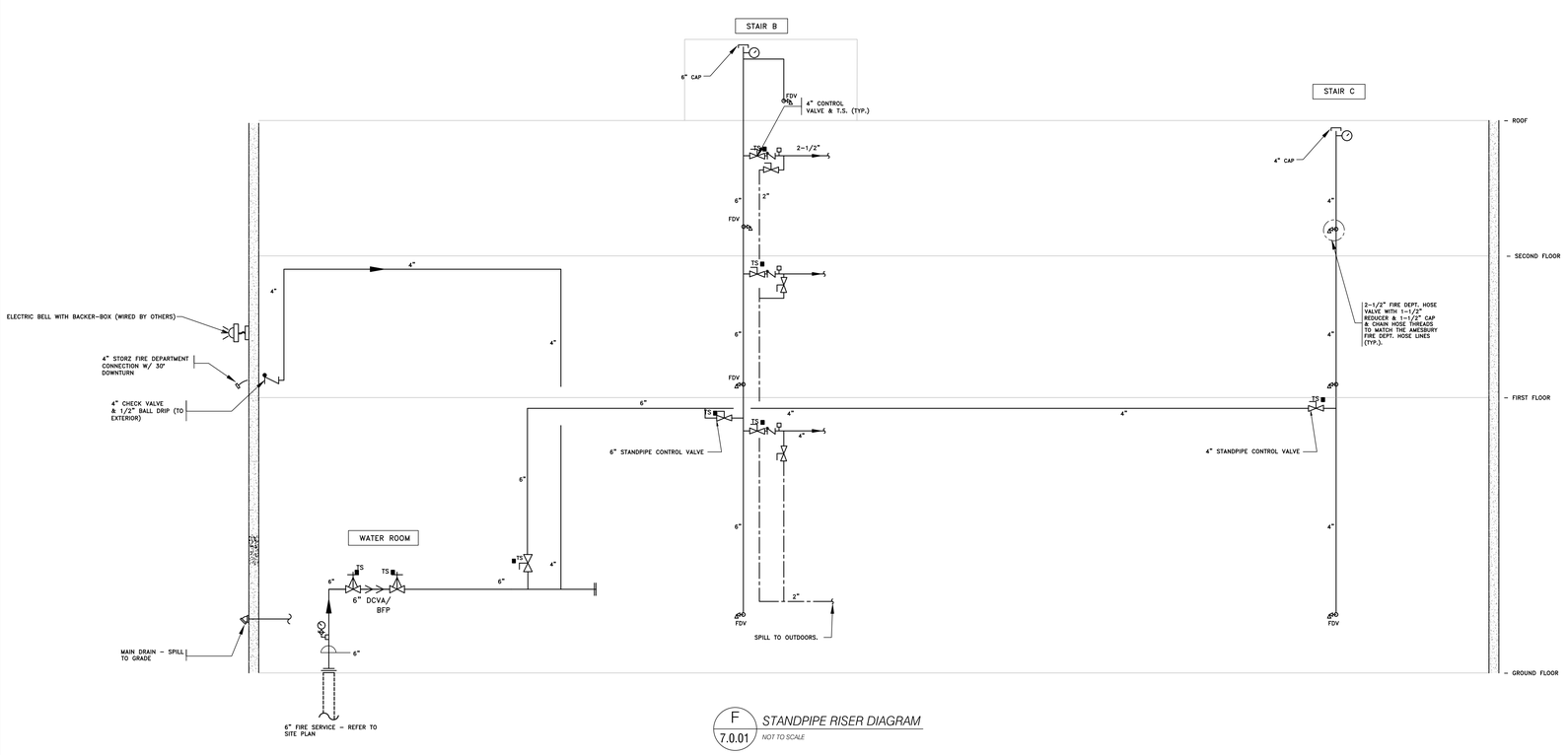

F 7.0.01 *STANDPIPE RISER DIAGRAM*
NOT TO SCALE

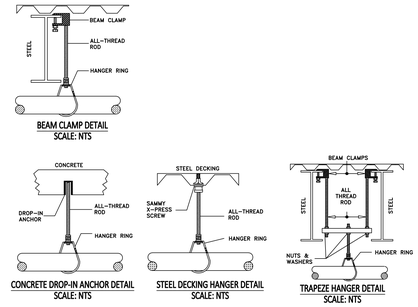

NOTE:
REFER TO STRUCTURAL DRAWINGS FOR HANGER LIMITATIONS AT ROOF DECK.

E 7.0.01 TYPICAL HANGER DETAILS
NOT TO SCALE

DESIGN BASIS:

Light Hazard (Classrooms, offices etc.)
Type of System: Wet
Sprinkler Discharge Density: 0.10 gpm / sq. ft.
Design Area: 1500 SF
Hose Stream Allowance: 100 gpm
Sprinkler Orifice: 1/2" thread, 5.6 K-Factor
Maximum Spacing: 225 SF (15' x 15' Spacing used in most cases) or as limited by hydraulic calculation results.

Ordinary Hazard Group I Spaces (kitchen, mechanical and storage rooms)
Type of System: Wet
Sprinkler Discharge Density: 0.15 gpm / sq. ft.
Design Area: 1500 SF
Hose Stream Allowance: 250 gpm
Sprinkler Orifice: 1/2" thread, 5.6 K-Factor
Maximum Spacing: 130 SF (12' x 10' Spacing used in most cases) or as limited by hydraulic calculation results.

FLOW TEST DATA

STATIC (PSI): 78 PSI
RESIDUAL (PSI): 68 PSI
FLOW (GPM): 1138 GPM
DATE: 05/20/19

FIRE PROTECTION LEGEND

⊙	1/2" CONCEALED PENDANT (Q/R, K=5.6)	⊙⊖	1/2" UPRIGHT & PENDENT 1/2", 5.6 K-FACTOR	▷	REDUCER/INCREASER
▷D	1/2" DRY SIDEWALL SPRINKLER (Q/R, K=5.6)		CHECK VALVE		PRESSURE GAUGE & PETCOCK
▷	1/2" SIDEWALL SPRINKLER (Q/R, K=5.6)	FCS	FLOOR CONTROL STATION		FLOW SWITCH
⊙D	1/2" DRY PENDANT SPRINKLER (Q/R, K=5.6)		SIAMESE		BUTTERFLY VALVE
○	1/2" UPRIGHT SPRINKLER (Q/R, K=5.6)		CONTROL VALVE		BALL VALVE
⊙H	1/2" DRY PENDANT SPRINKLER (Q/R, K=5.6) (HIGH TEMP)		HOSE VALVE	■ TS	TAMPER SWITCH
		>>	DOUBLE CHECK VALVE ASSEMBLY		CONNECT TO EXISTING
			OS&Y GATE VALVE		DENOTES LIMIT OF DEMOLITION

GENERAL NOTES:

OBTAIN AND PAY FOR ALL PERMITS.

ALL SPRINKLERS SHALL BE QUICK RESPONSE TYPE.\

ALL PENDANT HEADS SHALL BE CONCEALED TYPE, UNLESS SPECIFICALLY INDICATED OTHERWISE.

ALL MATERIALS SHALL BE UL LISTED FOR FIRE PROTECTION USE.

INSTALLATION SHALL CONFORM TO THE REQUIREMENTS OF NFPA-13, 2013 EDITION.

ALL WET-SYSTEM PIPING 2" & BELOW SHALL BE SCHEDULE 40 BLACK STEEL WITH CAST IRON FITTINGS. ALL WET-SYSTEM PIPING 2-1/2" & LARGER SHALL BE SCHEDULE 10 BLACK STEEL.

ALL DRY-SYSTEM PIPING 2" & BELOW SHALL BE SCHEDULE 40 GALVANIZED STEEL WITH DRY-SEAL COUPLINGS. ALL DRY-SYSTEM PIPING 2-1/2" AND LARGER SHALL BE SCHEDULE 10 GALVANIZED STEEL WITH DRY-SEAL COUPLINGS.

CONTRACTOR SHALL BE RESPONSIBLE FOR PROVIDING ADEQUATE INSULATION FOR FREEZE PROTECTION.

INTENT:

THE CONTRACT DOCUMENTS ARE DIAGRAMMATIC AND INTENDED TO SHOW WORK SCOPE ONLY, NOT INTENDED TO SHOW ALL OFFSETS, FITTINGS HANGERS AND APPURTANENCES WHICH MAY BE REQUIRED FOR A COMPLETE AND OPERATIONAL SYSTEM.

SOME CHANGES IN PIPING ARRANGEMENTS MAY BE REQUIRED IN ORDER TO COORDINATE WITH OTHER TRADES OR BUILDING STRUCTURE TO AVOID CONFLICTS.

SHOP DRAWINGS AND SUBMITTALS:

THE FIRE PROTECTION CONTRACTOR SHALL BE RESPONSIBLE FOR PROCURING CURRENT FIRE FLOW TEST DATA FOR USE AS A DESIGN BASE.

SHOP DRAWINGS AND HYDRAULIC CALCULATIONS PREPARED IN ACCORDANCE WITH THE GUIDELINES SET FORTH IN NFPA-13 SHALL BE SUBMITTED FOR REVIEW AND APPROVAL TO THE ENGINEER OF RECORD.

A PROPERLY EXECUTED CONTRACTORS MATERIAL AND TEST CERTIFICATE AND ONE SET OF AS BUILT DRAWING REPRODUCIBLES SHALL BE FURNISHED TO THE OWNERS REPRESENTATIVE AT THE COMPLETION OF WORK.

TESTING PROCEDURES:

ALL PIPING SHALL BE HYDROSTATICALLY TESTED PER THE REQUIREMENTS OF NFPA-13 (200 PSI FOR 2-HOURS WITHOUT PRESSURE LOSS).

SPRINKLER ALARM AND SUPERVISORY DEVICES SHALL BE TESTED PER THE REQUIREMENTS OF NFPA-13.

A MAIN DRAIN TEST SHALL BE PERFORMED PER THE REQUIREMENTS OF NFPA-13. MEET ALL TESTING REQUIREMENTS OF NFPA 25

AMESBURY ELEMENTARY SCHOOL

AMESBURY, MA

DINISCO DESIGN
architects + planners
99 Chauncy Street, Suite 901
Boston, MA 02111
(617) 426-2858

DGT Associates
Surveying & Engineers
1071 Worcester Road
Framingham, MA 01701
(508) 879-0030

Brown Sardina, Inc.
Landscape Architects
24 Roland Street
Boston, MA 02129
(617) 482-4703

Foley Buhl Roberts & Assoc., Inc.
Structural Engineers
2150 Washington Street
Newton, MA 02462
(617) 527-9600

Crabtree McGrath Assoc., Inc.
Food Service Consultants
161 West Main Street
Georgetown, MA 01833
(978) 352-8500

VAV International, Inc.
Mechanical Engineers
400 West Cummings Park S. 4700
Woburn, MA 01801
(781) 935-7228

Thompson Engineering Company, Inc.
Electrical Engineers
89 Newbury Street, Suite 103
Danvers, MA 01923
(617) 866-9066

EdVance Technology Design, Inc.
Technology Consultants
300 Brickstone Square, Suite 201
Andover, MA 01880
(978) 256-9900

KEY PLAN

NORTH ARROW (Called North) *STAMP*

Date: 21 August 2020

Drawn By: FS

Scale: NONE

Revisions

Number	Date	Description

90% COST ESTIMATE SET

FIRE PROTECTION DETAILS, LEGEND & NOTES

7.0.01

© 2020 DiNisco Design



AMESBURY ELEMENTARY SCHOOL

AMESBURY, MA

DINISCO DESIGN
architects + planners
99 Chauncy Street, Suite 901
Boston, MA 02111
(617) 426-2858

NORTH ARROW

STAMP

Date: 21 August 2020

Drawn By: FS

Scale: 0 8 16

Revisions

Number	Date	Description

90% COST ESTIMATE SET

GROUND FLOOR FIRE PROTECTION PLAN

7.4.01

© 2020 DiNisco Design



AMESBURY ELEMENTARY SCHOOL

AMESBURY, MA

DINISCO DESIGN
architects + planners
99 Chauncy Street, Suite 901
Boston, MA 02111
(617) 426-2858

NORTH ARROW

STAMP

Date: 21 August 2020

Drawn By: FS

Scale: 0 8 16

Revisions

Number	Date	Description

90% COST ESTIMATE SET

FIRST FLOOR FIRE PROTECTION PLAN

7.4.02

© 2020 DiNisco Design

AMESBURY ELEMENTARY SCHOOL

AMESBURY, MA

DINISCO DESIGN
architects + planners
99 Chauncy Street, Suite 901
Boston, MA 02111
(617) 426-2858

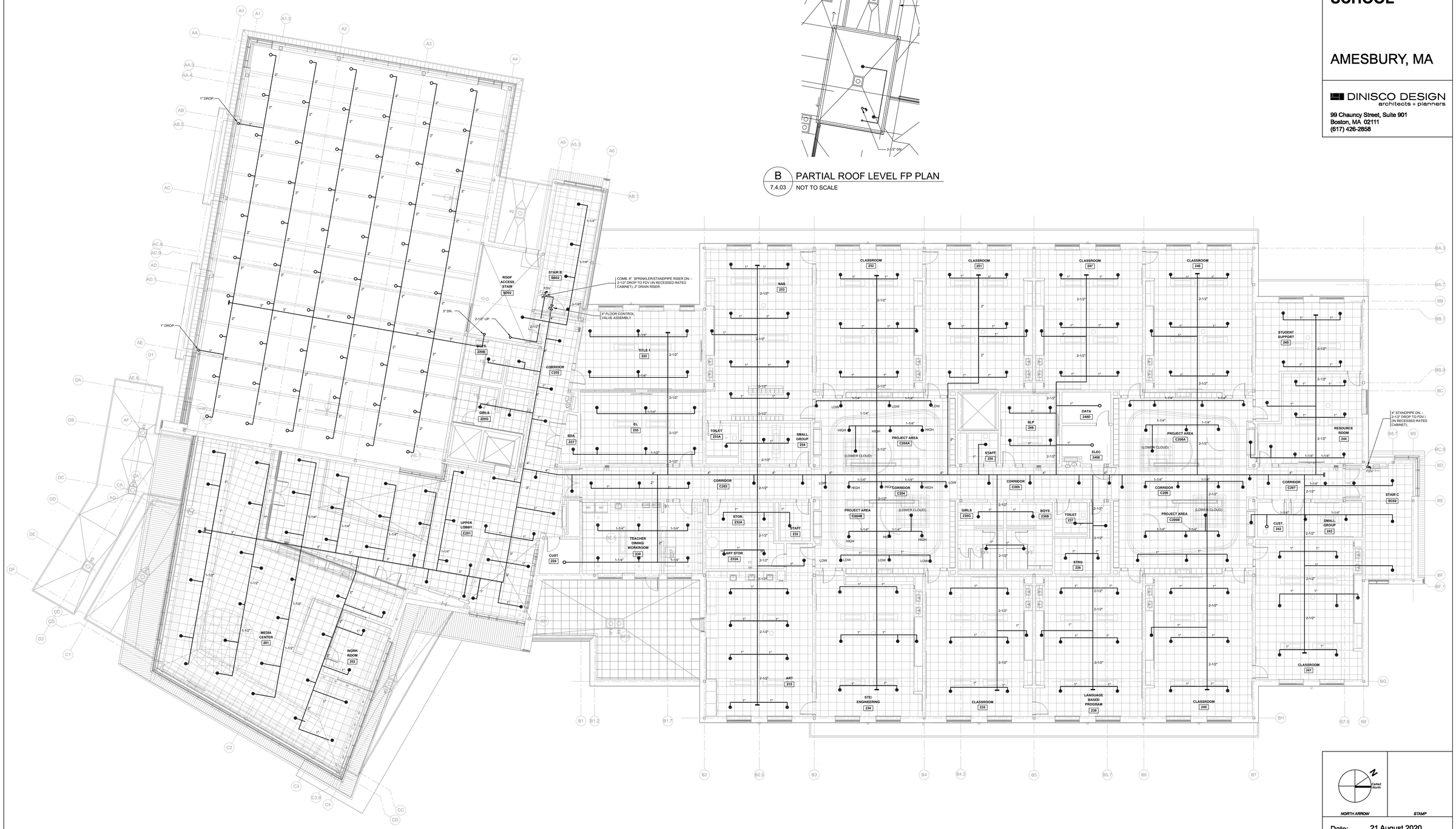

B PARTIAL ROOF LEVEL FP PLAN
7.4.03 NOT TO SCALE

NORTH ARROW

STAMP

Date: 21 August 2020

Drawn By: FS

Scale: 0 8 16

Revisions

Number	Date	Description

90% COST ESTIMATE SET

SECOND FLOOR FIRE PROTECTION PLAN

7.4.03

© 2020 DiNisco Design

PLUMBING FIXTURE SCHEDULE

MARK	FIXTURES	SERVICE CONNECTIONS				REMARKS	MAKE OR EQUAL	WATER USAGE
		S/W	V	CW	HW			
P-1	WATER CLOSET (ADULT) (18")	4"	2"	1"	--	TOTO MODEL CT708, VITREOUS CHINA, WALL HUNG, WHITE, ELONGATED, WALL OUTLET, 1.28 GPF, 1-1/2" TOP SPUD, ECO POWER FLUSH VALVE TET1LA	VITREOUS: SLOAN, AMERICAN STANDARD, KOHLER, FLUSH VALVE: SLOAN, AMERICAN STANDARD, HYDROTEK	1.28 GPF
P-1A	WATER CLOSET (GR. K-2) (15")	4"	2"	1"	--	TOTO MODEL CT708, VITREOUS CHINA, WALL HUNG, WHITE, ELONGATED, WALL OUTLET, 1.28 GPF, 1-1/2" TOP SPUD, ECO POWER FLUSH VALVE TET1LA	VITREOUS: SLOAN, AMERICAN STANDARD, KOHLER, FLUSH VALVE: SLOAN, AMERICAN STANDARD, HYDROTEK	1.28 GPF
P-1B	PRE-K TOILET, RISE JR (12")	4"	2"	1"	--	AMERICAN STANDARD "BABY DEAVRO" 2282.001, VITREOUS CHINA, FLOOR MOUNTED, WHITE, 1.28 GPF, 1-1/2" TOP SPUD, MANUAL FLUSH VALVE	VITREOUS: SLOAN, ELJER, CRANE, FLUSH VALVE: SLOAN, HYDROTEK, DELANY	1.28 GPF
P-2	ADULT LAVATORY (34")	1-1/2"	1-1/2"	1/2"	1/2"	AMERICAN STANDARD MURRO #0954, WALL HUNG, HANDICAPPED W/ TOTO ECO POWER SENSOR FAUCET TEL163	VITREOUS: SLOAN, ELJER, CRANE: FLUSH VALVE: SLOAN, HYDROTEK, DELANY	0.35 GPM
P-2A	CHILD LAVATORY (30")	1-1/2"	1-1/2"	1/2"	1/2"	AMERICAN STANDARD MURRO #0954, WALL HUNG, HANDICAPPED W/ TOTO ECO POWER SENSOR FAUCET TEL163	VITREOUS: SLOAN, ELJER, CRANE: FLUSH VALVE: SLOAN, HYDROTEK, DELANY	0.35 GPM
P-3	CLASSROOM SINK	2"	2"	1/2"	1/2"	JUST MANUFACTURING SL-ADA-17519-A-GR W/ CHICAGO FAUCET 895-317GN2AE72ABCP	ELKAY, KOHLER, OR EQUAL	0.5 GPM
P-3A	CLASSROOM SINK	2"	2"	1/2"	1/2"	JUST MANUFACTURING SL-ADA-17519-A-GR W/ CHICAGO FAUCET 895-317GN2AE72ABCP	ELKAY, KOHLER, OR EQUAL	0.5 GPM
P-4	SERVICE SINK	3"	2"	1/2"	1/2"	FIAT TSBC6010, 24x24x10. CHICAGO FAUCET #897-CP, WALL MOUNT FAUCTE WITH INTEGRAL VACUUM BREAKER, PAIL HOOK & WALL BRACE. PROVIDE BACKFLOW PREVENTION FOR CHEMICAL DISPENSERS	CRANE, MUSTEE OR ACORN	2 GPM
P-4A	UTILITY SINK	3"	2"	1/2"	1/2"	FIAT MODEL FL-1 FLOOR MOUNTED SINK W/ CHICAGO DECK MOUNTED FAUCET	CRANE, MUSTEE OR ACORN	2 GPM
P-5	URINAL (24")	2"	2"	3/4"	_ _	TOTO UT445U, HIGH EFFICIENCY URINAL W/ ECO FLUSH VALVE	SLOAN, AMERICAN STANDARD, KOHLER	.125 GPF
P-5A	URINAL (17")	2"	2"	3/4"	_ _	TOTO UT445U, HIGH EFFICIENCY URINAL W/ ECO FLUSH VALVE	SLOAN, AMERICAN STANDARD, KOHLER	.125 GPF
P-6	DRINKING FOUNTAIN	2"	2"	1/2"	--	OASIS MMRSLEBF, DUAL STATION WITH BOTTLE FILLER	ELKAY, HAWS OR FERGUSON	
P-7	ART ROOM SINK	2"	2"	1/2"	1/2"	JUST MANUFACTURING SLX-17519-A-GR W/ CHICAGO FAUCET 895-317 GN2AE72ABCP. PROVIDE SOLIDS INTERCEPTOR	ELKAY, KOHLER, OR EQUAL	.5 GPM
P-7A	ART ROOM SINK	2"	2"	1/2"	1/2"	JUST MANUFACTURING SL-ADA-17519-A-GR W/ CHICAGO FAUCET 895-317 GN2AE72ABCP. PROVIDE SOLIDS INTERCEPTOR	ELKAY, KOHLER, OR EQUAL	.5 GPM
P-8	EMERGENCY EYEWASH	-	-	3/4"	3/4"	GUARDIAN G1814, EYEWASH W/ STAINLESS STEEL BOWL.PROVIDE MIXING VALVE - SPILL TO FLOOR	HAWS, BRADLEY, OR EQUAL	
P-9	ICE MAKER	-	-	1/2"	-	PROVIDE WATTS LF7 CHECK VALVE, DRAIN PUMP CONVERSION KIT. RUN INDIRECT WASTE TO SINK IN NURSE'S SUITE.		
WH	NON-FREEZE WALL HYDRANT	-	-	3/4"	-	WOODFORD MODEL #65, AUTOMATIC DRAINING	CHICAGO, WATTS, WOODFORD OR EQUAL	
HB	HOSE BIBB	-	-	1/2"	-	CHICAGO MODEL #952-633PLCP, CHROME PLATED	CHICAGO, WATTS, WOODFORD OR EQUAL	

GAS-FIRED HOT WATER HEATER SCHEDULE

TAG NO.	BASIS OF SELECTION	LOCATION	SERVES	GAS DATA			CAPACITIES			ELECTRICAL DATA		REMARKS
				TYPE	INPUT (MBH)	THERMAL EFFICIENCY	RECOVERY (GPH)	TEMP RISE (°F)	STORAGE (GALLONS)	VOLTS	PH	
DWH-1	LAARS LUHE120T4003NA	WATER ROOM	WHOLE BUILDING	NATURAL	399	96%	456	100	120	120	1	P & T RELIEF VALVE & EXPANSION TANK, NEUTRALIZATION KIT
DWH-2	LAARS LUHE120T4003NA	WATER ROOM	WHOLE BUILDING	NATURAL	399	96%	456	100	120	120	1	P & T RELIEF VALVE & EXPANSION TANK, NEUTRALIZATION KIT

EXPANSION TANK SCHEDULE

TAG NO.	BASIS OF SELECTION	SERVICE	MAX. WATER TEMP. (°F)	TOTAL TANK VOLUME (GAL.)	MAX. WORKING PRESSURE (PSIG)	DIMENSIONS (INCHES)	WEIGHT (LBS)
XT-1	ELBI DTS-30	DWH-1	140	8.0	150	15.8"Ø x 15.3" h	41
XT-2	ELBI DTS-30	DWH-2	140	8.0	150	15.8"Ø x 15.3" h	41

PUMP SCHEDULE

TAG NO.	DESCRIPTION	SERVICE	LOCATION	PERFORMANCE DATA				ELECTRICAL DATA			MANUFACTURER & MODEL #	REMARKS
				GPM	HEAD (ft.)	RPM	Watts (max.)	V	PH	HZ		
RCP-1	HOT WATER CIRC PUMP	DWH-1 & DWH-2	WATER ROOM	5	20	-	106	115	1	-	GRUNDFOS MAGNA3 32-60	INTEGRAL AQUA-STAT, PROVIDE SIM CARD FOR BMS INTERFACE.

INTERCEPTOR SCHEDULE

TAG NO.	BASIS OF SELECTION	LOCATION	SERVICE	FLOW (GPM)	CAPACITIES		INLET/ OUTLET SIZE	DIMENSIONS	WEIGHT	REMARKS
					WATER (GAL.)	GREASE/OIL (LBS)				
GI-1	SHIER GREAT BASIN	FLOOR RECESSED	KE-53/KE-54	50	20	127	3	2'-11"L x 1'-11"W x 1'-1"H	49	RECEIVING CRADLE, ACID RESISTANT & ADEQUATE SERVICE ACCESS.
GI-2	SHIER GREAT BASIN	FLOOR RECESSED	KE-33	20	10	70	2	2'-3"L x 1'-11"W x 1'-0"H	39	RECEIVING CRADLE, ACID RESISTANT & ADEQUATE SERVICE ACCESS.
GI-3	SHIER GREAT BASIN	FLOOR RECESSED	KE-81	50	20	127	3	2'-11"L x 1'-11"W x 1'-1"H	49	RECEIVING CRADLE, ACID RESISTANT & ADEQUATE SERVICE ACCESS.
OI-1	STRIEM OS-50	FLOOR RECESSED	ELEV. SUMP PUMP	50	— —	40	4	3'-1"L x 2'-4"W x 2'-4"H	92	FIELD ADJUSTABLE RISER SYSTEM,WATER/GAS TIGHT COVER & ADEQUATE SERVICE ACCESS.
SI-1	STRIEM 1176	INLINE	P-7 (ART SINKS)	-	.5	NA	2	5-1/2"Ø x 0'-8-3/4"H	4	REMOVABLE STAINLESS STEEL BASKET

PUMP SCHEDULE

TAG NO.	DESCRIPTION	SERVICE	LOCATION	PERFORMANCE DATA				DISCHARGE	ELECTRICAL DATA (EMERG)	MANUFACTURER & MODEL #	REMARKS
				GPM	HEAD (ft.)	RPM	HP	PIPE	V/PH/HZ		
SP-1	ELEVATOR SUMP PUMP	ELEVATOR	ALL ELEVATOR PIT	50	25	1750	1/2	2"	115/1/60	STANCORE SE-50	SET OF DRY CONTAT FOR DDC & WATER MINDER DETECTION SYSTEM, RUN TO OIL INTERCEPTOR.

PLUMBING LEGEND & ABBREVIATIONS

NOTE:
ALL ITEMS SHOWN ARE NOT NECESSARILY USED ON THIS PROJECT

HC	HANDICAPPED/BARRIER FREE
VB	VACUUM BREAKER
FD	FLOOR DRAIN
RD	ROOF DRAIN
FCO	FLOOR CLEANOUT
CO	LINE CLEANOUT
DCOF	DANDY CLEANOUT @ FLOOR
WCOF	WALL CLEANOUT @ FLOOR
HB	HOSE BIB WITH V.B.
WH	WALL HYDRANT WITH INTEGRAL V.B.
VTR	VENT THROUGH ROOF
INV	INVERT
ELEV	ELEVATION
GC	GENERAL CONTRACTOR
PC	PLUMB CONTRACTOR
NO	NORMALLY OPEN
NC	NORMALLY CLOSED
CONT	CONTINUATION
DWH	DOMESTIC WATER HEATER
DCVA	DOUBLE CHECK VALVE BACKFLOW PREVENTER
RPBP	REDUCED PRESSURE BACKFLOW PREVENTER
W&V	WASTE AND VENT
ISOM	ISOMETRIC
AC	AIR CHAMBER
SA	SHOCK ABSORBER
IW	INDIRECT WASTE
TP	TRAP PRIMER
BV	BALL VALVE
T.O.P.	TOP OF PIPE
LW	LAB WASTE
CS	CUP SINK
LV	LAB VENT
LVR	LAB VENT RISER
LWR	LAB WASTE RISER
VR	VENT RISER
WR	WASTE RISER
S	SANITARY
SR	SANITARY RISER
TRO	THROUGH ROOF OVER
FBO	FURNISHED BY OTHERS
AP	ACCESS PANEL
FFE	FINISH FLOOR ELEVATION
AFF	ABOVE FINISHED FLOOR
HW	HOT WATER
CW	COLD WATER
V	VENT
W	WASTE

- BURIED SOIL AND WASTE PIPING
- SOIL AND WASTE PIPING
- KW — KITCHEN WASTE PIPING
- BURIED SANITARY VENT PIPING
- SANITARY VENT PIPING
- COLD WATER PIPING
- HOT WATER PIPING
- HOT WATER RETURN PIPING
- TP — TRAP PRIMER PIPING
- TW — TEMPERED WATER PIPING
- RWL — RAIN WATER LEADER PIPING
- G — LOW PRESSURE GAS
- NPCW — NON-POTABLE COLD WATER

- GAS COCK
- UNION
- BALL VALVE
- WALL HYDRANT (WH)
- AIR CHAMBER
- INDICATES SLOPE OF PIPE
- INDICATES DIRECTION OF PITCH (DOWN)(1/8"/FT UNLESS NOTED)
- GATE VALVE
- CHECK VALVE
- BALANCING VALVE
- CONNECT TO EXISTING
- FD — FLOOR DRAIN
- FS — FLOOR SINK

KITCHEN FIXTURE SCHEDULE

MARK	FIXTURES	SERVICE CONNECTIONS								REMARKS
		CW	FCW	HW	V	S/W	I.W.	G	MBH	
KE-4	STACKED WASHER/DRYER	1/2"	--	1/2"	2"	2"	--	--	--	
KE-12B	COOLER EVAPORATOR COIL	--	--	--	--	--	1"	--	--	RUN INDIRECT WASTE TO FLOOR SINK.
KE-12D	FREEZER EVAPORATOR COIL	--	--	--	--	--	1"	--	--	RUN INDIRECT WASTE TO FLOOR SINK.
KE-20	COOKS TABLE W/ SINK	1/2"	--	1/2"	2"	2"	--	--	--	
KE-23	HAND SINK	1/2"	--	1/2"	1-1/2"	1-1/2"	--	--	--	
KE-26	PREP SINK	1/2"	--	1/2"	--	--	2"	--	--	RUN INDIRECT WASTE TO FLOOR SINK.
KE-32	FOUR BURNER RANGE WITH OVEN	--	--	--	--	--	--	3/4"	143	PROVIDE GAS VALVE
KE-33	FLOOR PAN & GRATE	--	--	--	3"	2"	--	--	--	RUN TO GI-2
KE-34	FORTY GALLON BRAISING PAN	1/2"	--	1/2"	--	--	--	1/2"	144	CW & HW FROM KE-46
KE-39	WATER FILTER	3/4"	--	--	--	--	--	--	--	CW FROM KE-46
KE-40	TWELVE PAN STEAMER	--	(2) 3/4"	--	--	--	(2) 1"	(2) 1/2"	27	FCW FROM KE-39, G FROM KE-46, RUN INDIRECT WASTE TO FLOOR SINK.
KE-41	DOUBLE CONVECTION OVEN	--	--	--	--	--	--	3/4"	100	PROVIDE GAS VALVE.
KE-46	UTILITY DISTRIBUTION SYSTEM	3/4"	--	3/4"	--	--	--	2"	581	
KE-53	WAREWASHER	(2) 1/2"	--	1/2"	-	-	1-1/2"	--	--	RUN INIRECT WASTE FLOOR SINK TO GI-1. PROVIDE MIXING VALVE TO MAINTAIN MIN. 50°F CW.
KE-54	3 COMPARTMENT SINK	(2) 3/4"	--	(2) 3/4"	2"	(3) 2"	--	--	--	RUN WASTE TO GI-1.
KE-55	DETERGENT SYSTEM	1/2"	--	--	--	--	--	--	--	PROVIDE BACKFLOW PREVENTER, WATTS LF7, OR EQUAL.
KE-57	DISPOSER	1/2"	--	--	2"	2"	--	--	--	
KE-58	HOSE REEL ASSEMBLY	1/2"	--	1/2"	--	--	--	--	--	
KE-70	FILL FAUCET	1/2"	--	--	--	--	--	--	--	
KE-71	HOT FOOD WELLS	--	--	--	--	--	1"	--	--	RUN INDIRECT WASTE TO FLOOR SINK.
KE-72	COLD PAN	--	--	--	--	--	3/4"	--	--	RUN INDIRECT WASTE TO FLOOR SINK.
KE-81	WAREWASHER	(2) 1/2"	--	1/2"	--	--	1-1/2"	--	--	RUN INDIRECT WASTE FLOOR SINK TO GI-3
KE-83	SOLID WARE TABLE	--	--	--	2"	2"	--	--	--	
KE-84	HOSE REEL ASSEMBLY	1/2"	--	1/2"	--	--	--	--	--	

NOTES:
PROVIDE BACKFLOW PREVENTERS FOR KITCHEN EQUIPMENT, AS REQUIRED.
KITCHEN EQUIPMENT BY OTHERS, PLUMBING CONNECTIONS BY PLUMBER.

PIPE INSULATION SCHEDULE

FLUID OPERATING TEMPERATURE AND USAGE (°F)	INSULATION CONDUCTIVITY		NOMINAL PIPE OR TUBE SIZE (in.)					REMARKS
	CONDUCTIVITY (BTU/in/(h·ft²·°F))	MEAN RATING TEMPERATURE (°F)	<1"	1" to <1.5"	1.5" to <4"	4" to <8"	≥8"	
105-140	0.21-0.28	100	1.0	1.0	1.5	1.5	1.5	
40-60	0.21-0.27	75	0.5	0.5	1.0	1.0	1.0	

NOTES:

1. FOR PIPING SMALLER THAN 1-1/2" AND LOCATED IN PARTITIONS WITHING CONDITIONED SPACES, REDUCTION OF THESE THICKNESSES BY 1" SHALL BE PERMITTED (BEFORE THICKNESS ADJUSTMENT REQUIRED IN NOTE (2) BUT NOT TO A THICKNESS LESS THAN 1".
2. FOR INSULATION OUTSIDE THE STATED CONDUCTIVITY RANGE, THE MINIMUM THICKNESS (T) SHALL BE DETERMINED AS FOLLOWS:
   T = r{(1+t/r)^(K/k-1)
   WHERE:
   T = MINIMUM INSULATION THICKNESS,
   r = ACTUAL OUTSIDE RADIUS OF PIPE,
   t = INSULATION THICKNESS LISTED IN THE TABLE FOR APPLICABLE FLUID TEMPERATURE AND PIPE SIZE,
   K = CONDUCTIVITY OF ALTERNATE MATERIAL AT MEAN RATING TEMPERATURE INDICATED FOR THE APPLICABLE FLUID (BTU * IN/H * FT^2 * °F) AND
   k = THE UPPER VALUE OF THE CONDUCTIVITY RANGE LISTED IN THE TABLE FOR THE APPLICABLE FLUID TEMPERATURE
3. FOR DIRECT-BURIED HEATING AND HOT WATER SYSTEM PIPING, REDUCTION OF THESE THICKNESSES BY 1-1/2" SHALL BE PERMITTED (BEFORE THICKNESS ADJUSTEMNT REQUIRED IN NOTE (2) BUT NOT TO THICKNESSES LESS THAN 1".

DRAIN SCHEDULE

ITEM	DESCRIPTION	LOCATION	LOCAL CONNECTION		MANUFACTURER & MODEL #	REMARKS
			WASTE (IN)	VENT (IN)		
FD-1	FLOOR DRAIN	-	3	2	ZURN #Z-415	ALL EXPOSED PARTS TO BE NICKEL BRONZE.
FD-2	FLOOR SINK	-	4	2	ZURN #Z-1950	ALL EXPOSED PARTS TO BE NICKEL BRONZE. PROVIDE HALF GRATE FOR KITCHEN FLOOR DRAINS RECEIVING INDIRECT WASTE
RD-1	ROOF DRAIN	ROOF	4	-	ZURN #Z-100-E	CAST IRON DOME,PROVIDE DECK CLAMP & EXTENSION AS REQUIRED.
RD-2	ROOF DRAIN	ROOF	5	-	ZURN #Z-100-E	CAST IRON DOME,PROVIDE DECK CLAMP & EXTENSION AS REQUIRED.
RD-3	ROOF DRAIN	ROOF	4	-	ZURN #Z-125-E	CAST IRON DOME,PROVIDE DECK CLAMP & EXTENSION AS REQUIRED.
OD-1	OVERFLOW DRAIN	ROOF	4	-	ZURN #Z-100-W3	PROVIDE DECK CLAMP & EXTENSION AS REQUIRED, INTERNAL WATER DAM
OD-2	OVERFLOW DRAIN	ROOF	5	-	ZURN #Z-100-W3	PROVIDE DECK CLAMP & EXTENSION AS REQUIRED, INTERNAL WATER DAM

MIXING VALVE SCHEDULE

TAG	MAKE & MODEL	LOCATION	SERVICE	MIN FLOW (GPM)	MAX. FLOW (GPM)	COLD WATER IN	140°F HOT WATER IN	120°F HOT WATER OUT	RETURN	ELECTRICAL	REMARKS
DMV-1	PVI DIGITEMP V8S	MECH ROOM	DOMESTIC HOT WATER	.5	85	2"	2"	2-1/2"	1"	115V/1Ø	PROVIDE CONNECTION TO BMS

AMESBURY ELEMENTARY SCHOOL

AMESBURY, MA

DINISCO DESIGN architects + planners
99 Chauncy Street, Suite 901
Boston, MA 02111
(617) 426-2858

DGT Associates
Surveying & Engineers
1071 Worcester Road
Framingham, MA 01701
(508) 879-0030

Brown Sardina, Inc.
Landscape Architects
24 Roland Street
Boston, MA 02129
(617) 482-4703

Foley Buhl Roberts & Assoc., Inc.
Structural Engineers
2150 Washington Street
Newton, MA 02462
(617) 527-9600

Crabtree McGrath Assoc., Inc.
Food Service Consultants
161 West Main Street
Georgetown, MA 01833
(978) 352-8500

VAV International, Inc.
Mechanical Engineers
400 West Cummings Park S. 4700
Woburn, MA 01801
(781) 935-7228

Thompson Engineering Company, Inc.
Electrical Engineers
89 Newbury Street, Suite 103
Danvers, MA 01923
(617) 866-9066

EdVance Technology Design, Inc.
Technology Consultants
300 Brickstone Square, Suite 201
Andover, MA 01880
(978) 256-9900

KEY PLAN



NORTH ARROW

STAMP

Date: 21 August 2020

Drawn By: FS

Scale: NONE

Revisions

Number	Date	Description

90% COST ESTIMATE SET

PLUMBING SCHEDULES & LEGEND

8.0.01

© 2020 DiNisco Design

AMESBURY ELEMENTARY SCHOOL

AMESBURY, MA

DINISCO DESIGN
architects + planners
99 Chauncy Street, Suite 901
Boston, MA 02111
(617) 426-2858

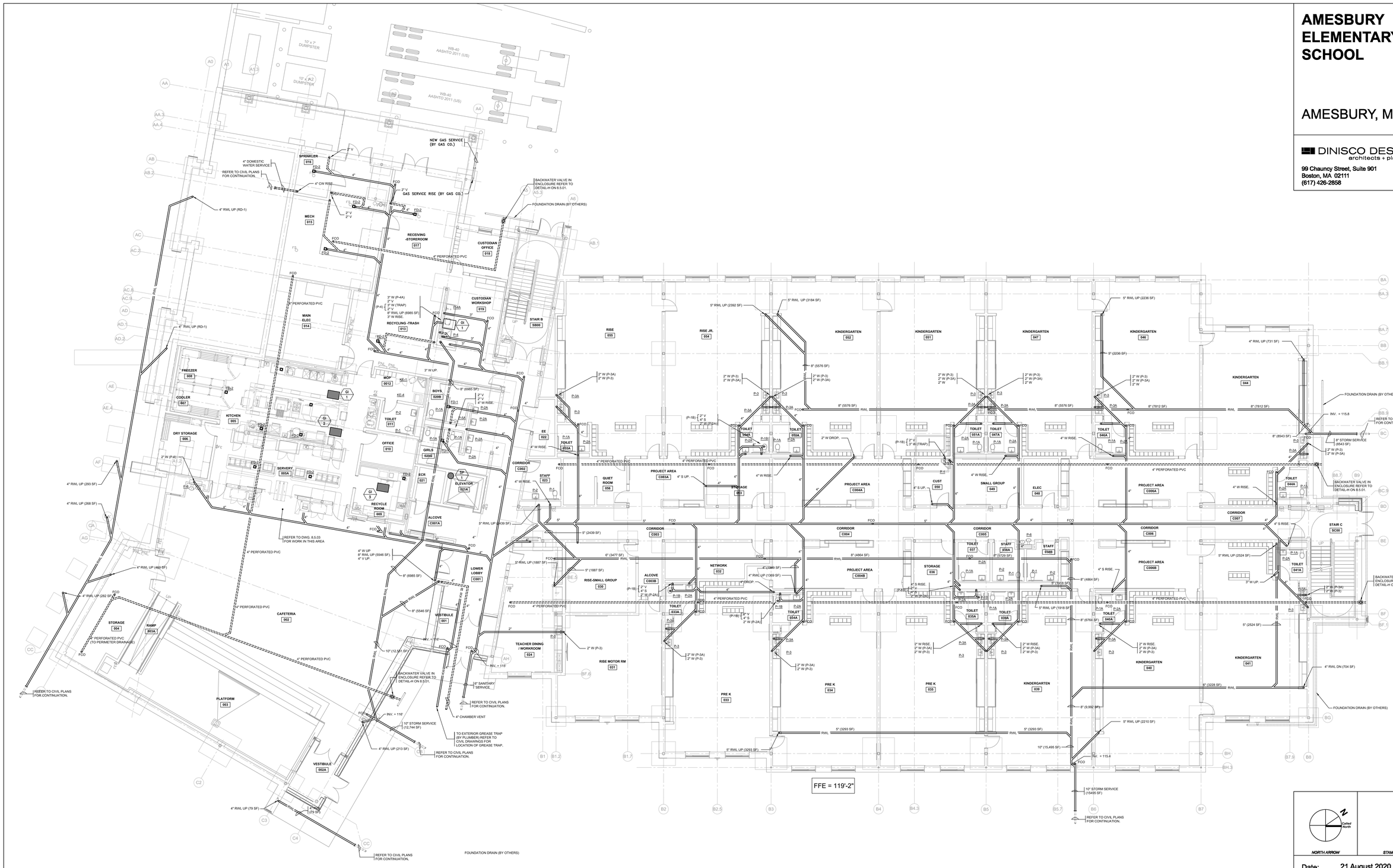

© 2020 DiNisco Design

AMESBURY ELEMENTARY SCHOOL

AMESBURY, MA

DINISCO DESIGN
architects + planners
99 Chauncy Street, Suite 901
Boston, MA 02111
(617) 426-2858

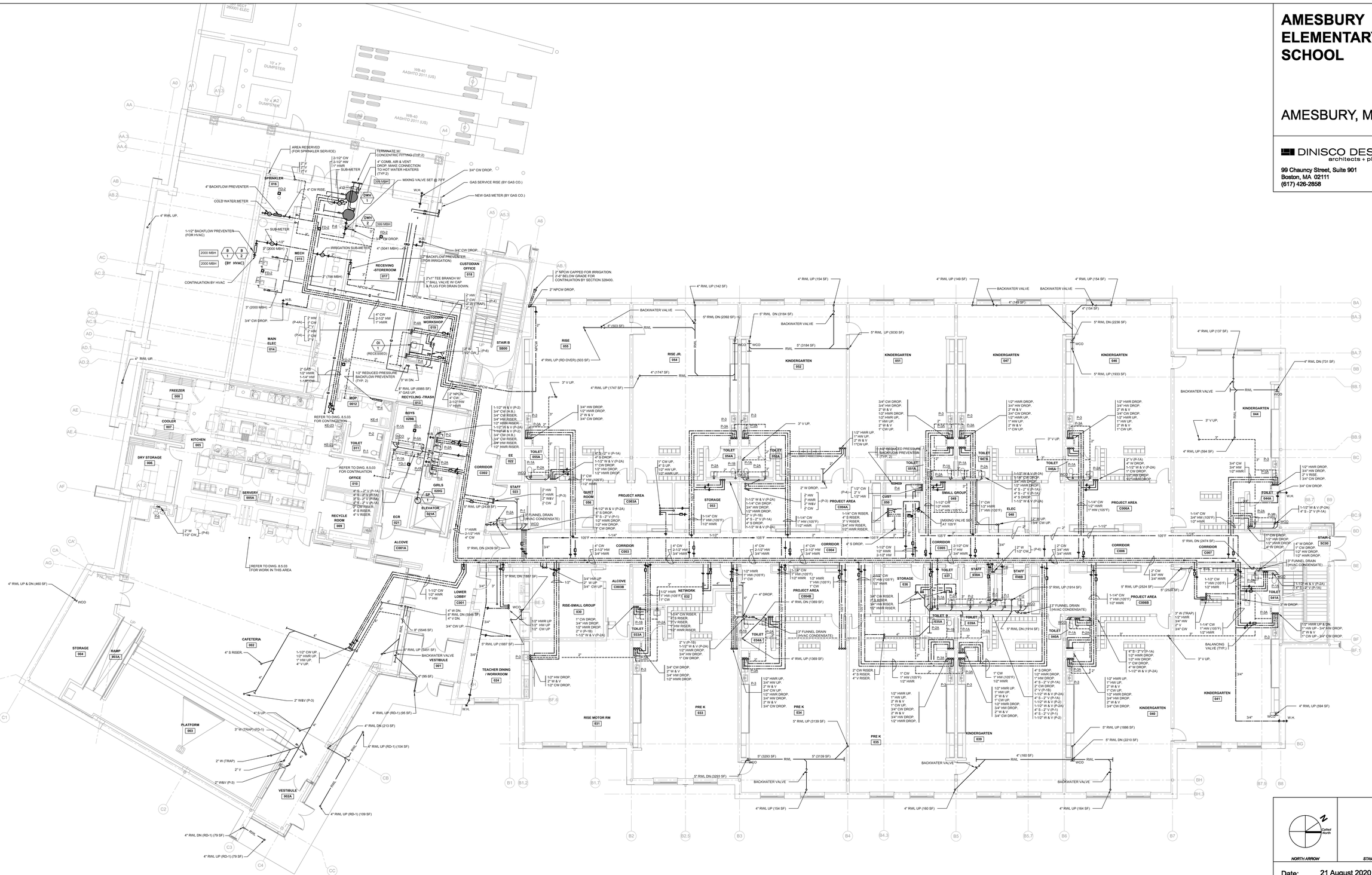

Date: 21 August 2020

Drawn By: FS

Scale: 0 8 16

Revisions

Number	Date	Description

90% COST ESTIMATE SET

GROUND FLOOR ABOVE SLAB PLUMBING PLAN

8.4.02

© 2020 DiNisco Design

AMESBURY ELEMENTARY SCHOOL

AMESBURY, MA

DINISCO DESIGN
architects + planners
99 Chauncy Street, Suite 901
Boston, MA 02111
(617) 426-2858



NORTH ARROW

STAMP

Date: 21 August 2020

Drawn By: FS

Scale: 0 8 16

Revisions

Number	Date	Description

90% COST ESTIMATE SET

FIRST FLOOR PLUMBING PLAN

8.4.03

© 2020 DiNisco Design

AMESBURY ELEMENTARY SCHOOL

AMESBURY, MA

DINISCO DESIGN
architects + planners
99 Chauncy Street, Suite 901
Boston, MA 02111
(617) 426-2858

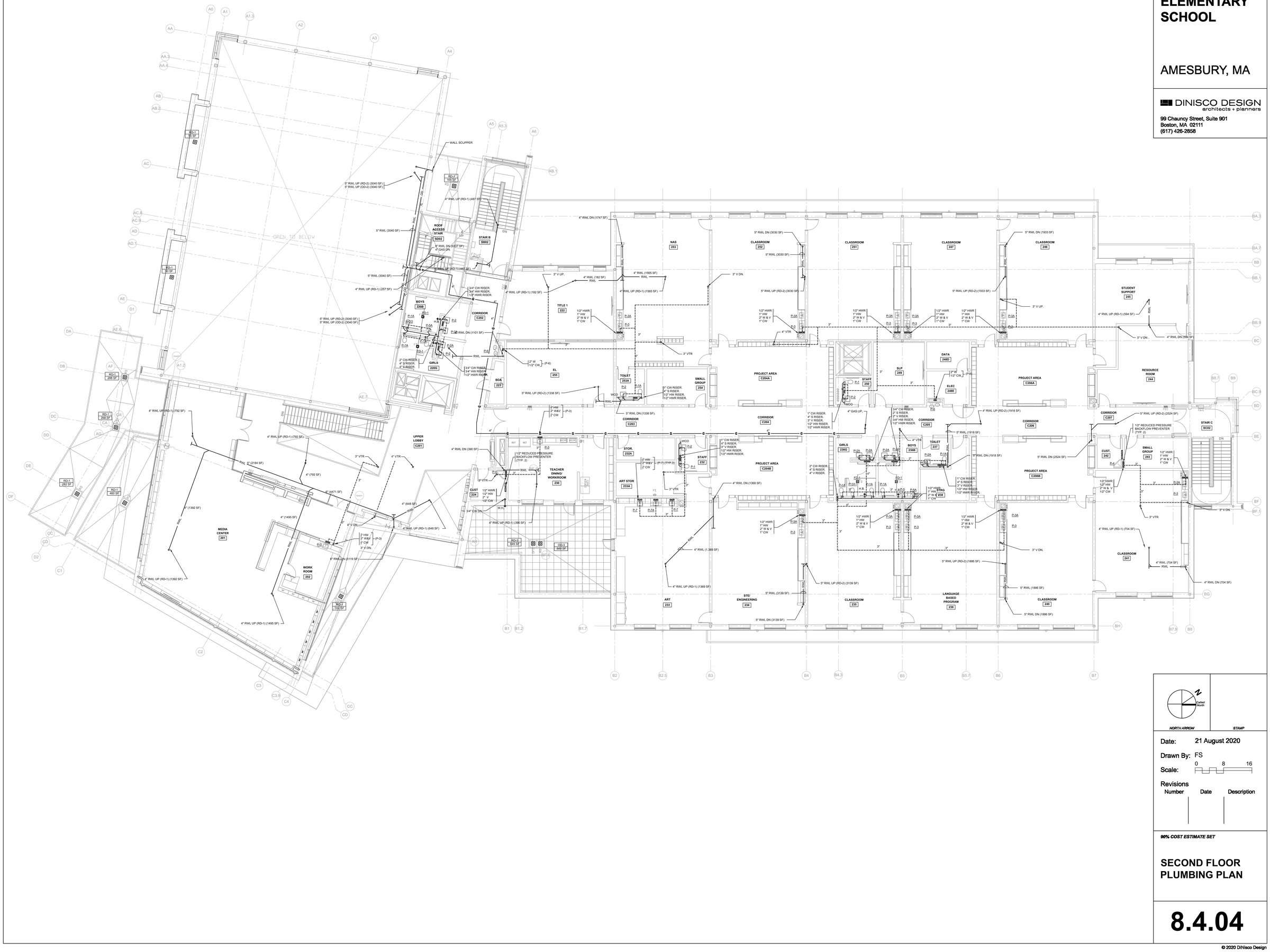

NORTH ARROW

STAMP

Date: 21 August 2020

Drawn By: FS

Scale: 0 8 16

Revisions

Number	Date	Description

90% COST ESTIMATE SET

SECOND FLOOR PLUMBING PLAN

8.4.04

© 2020 DiNisco Design

AMESBURY ELEMENTARY SCHOOL

AMESBURY, MA

DINISCO DESIGN
architects + planners
99 Chauncy Street, Suite 901
Boston, MA 02111
(617) 426-2858

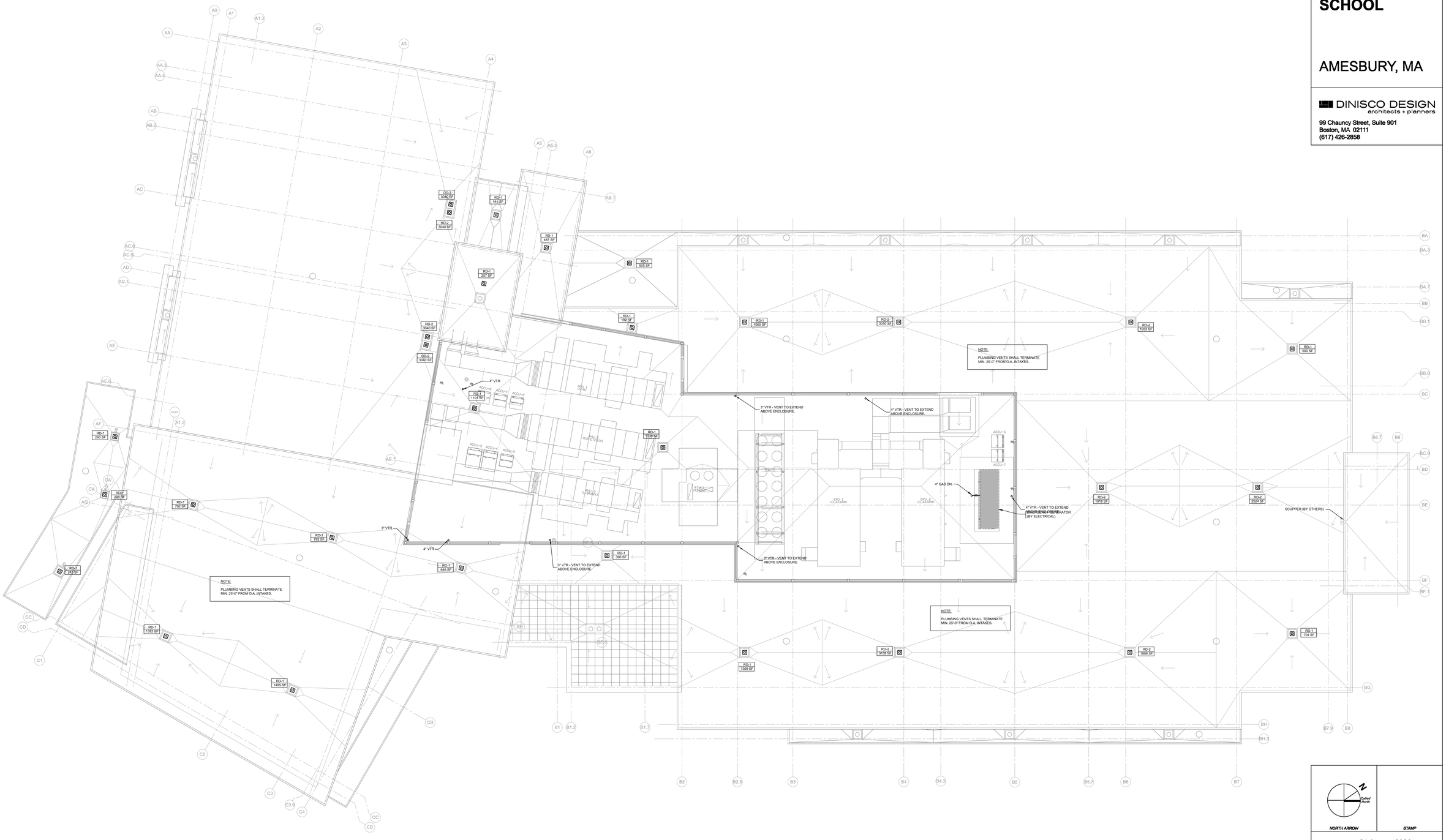

NORTH ARROW

STAMP

Date: 21 August 2020

Drawn By: FS

Scale: 0 8 16

Revisions

Number	Date	Description

90% COST ESTIMATE SET

ROOF LEVEL PLUMBING PLAN

8.4.05

© 2020 DiNisco Design

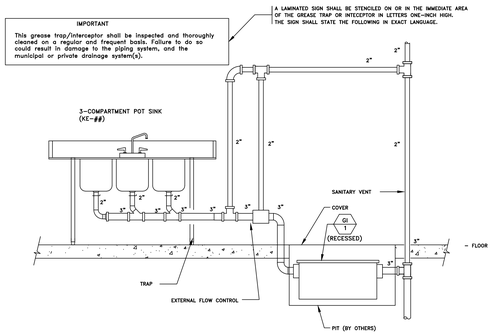

A 8.5.01 *GREASE TRAP PIPING DETAIL (RECESSED)*
NOT TO SCALE

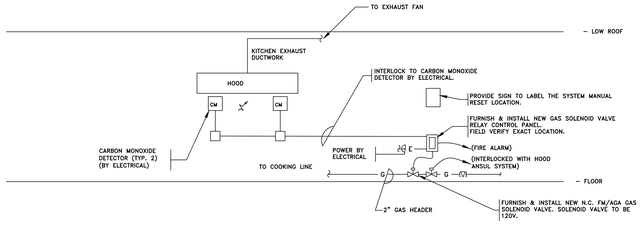

NOTES:
1. THE RELAY CONTROL PANEL SHALL BE ASCO CATALOG NO. 108D90C, OR APPROVED EQUAL, WITH A KEY-OPERATED SWITCH AND MANUAL "ON" AND "OFF" BUTTONS LOCATED ON FRONT COVER. PANEL SHALL BE LOW PROFILE AND SUITABLE FOR FLUSH MOUNTED, WALL RECESSED INSTALLATION.

GAS SOLENOID VALVE SEQUENCE OF OPERATION:

PROVIDE INTERLOCK TO THE CARBON MONOXIDE DETECTION SYSTEM PROVIDED BY ELECTRICAL – REFER TO ELECTRICAL DRAWINGS FOR DETAILS.

WHEN THE SYSTEM DETECTS CARBON MONOXIDE, AN ALARM SIGNAL IS SENT TO THE RELAY CONTROL PANEL TO DE-ENERGIZE POWER, CLOSE THE GAS SOLENOID VALVE AND TRANSMIT A SIGNAL TO THE FIRE ALARM CONTROL PANEL.

THE SYSTEM SHALL BE RE-SET AT THE RELAY CONTROL PANEL BY TURNING THE KEY SWITCH TO ON. THIS SHALL BE DONE AFTER RESETTING OF THE FACP AND CARBON MONOXIDE DETECTOR.

THE PLUMBING CONTRACTOR TO COORDINATE WITH THE ELECTRICAL AND FIRE ALARM CONTRACTOR TO PROVIDE THE REQUIRED SEQUENCE OF OPERATION.

SUBMIT WRITTEN REPORT TO THE AMESBURY PLUMBING INSPECTOR AFTER FULL COMMISSIONING HAS BEEN COMPLETED.

B 8.5.01 *GAS VALVE INTERLOCK DETAILS*
NOT TO SCALE

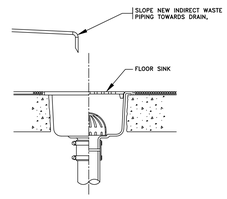

C 8.5.01 *INDIRECT WASTE DETAIL (KITCHEN)*
NOT TO SCALE

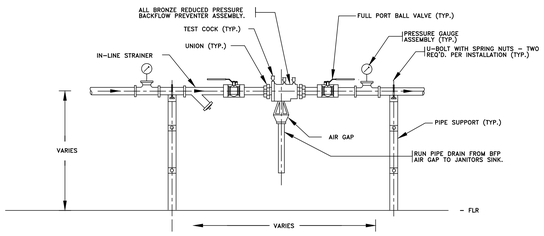

NOTES:
1. FURNISH TO OWNER (1) BFP SPARE PARTS KIT.
2. REFER TO FLOOR PLANS FOR PIPE SIZES.
3. PROVIDE 6" NIPPLE W/ CAPPED END FOR CONNECTION BY OTHERS.

D 8.5.01 REDUCED PRESSURE BACKFLOW PREVENTER PIPING DETAIL
NOT TO SCALE

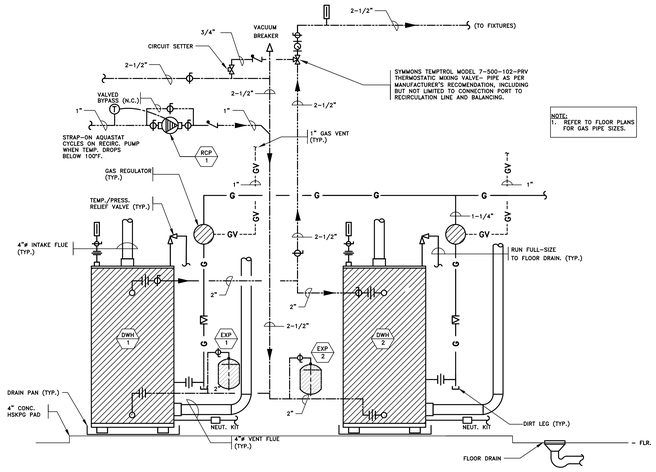

NOTE:
1. REFER TO FLOOR PLANS FOR GAS PIPE SIZES.

F 8.5.01 *DOMESTIC HOT WATER HEATER DIAGRAM*
NOT TO SCALE

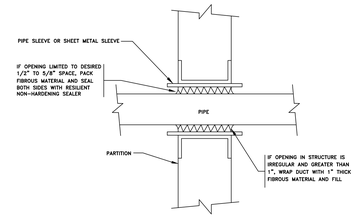

G 8.5.01 WALL PENETRATION DETAIL
NOT TO SCALE

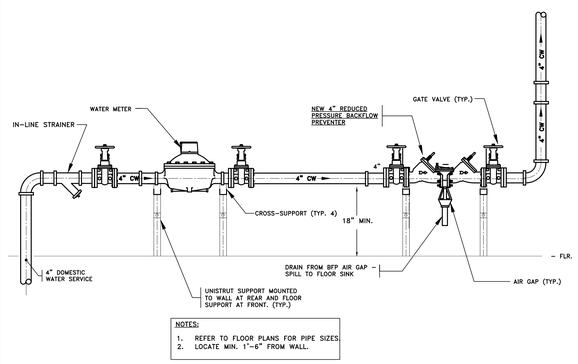

NOTES:
1. REFER TO FLOOR PLANS FOR PIPE SIZES.
2. LOCATE MIN. 1'-6" FROM WALL.

E 8.5.01 *DOMESTIC WATER SERVICE PIPING DETAIL*
NOT TO SCALE

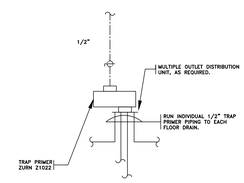

H 8.5.01 TRAP PRIMER DETAIL
NOT TO SCALE

AMESBURY ELEMENTARY SCHOOL

AMESBURY, MA

DINISCO DESIGN
architects + planners
99 Chauncy Street, Suite 901
Boston, MA 02111
(617) 426-2858

DGT Associates
Surveying & Engineers
1071 Worcester Road
Framingham, MA 01701
(508) 879-0030

Brown Sardina, Inc.
Landscape Architects
24 Roland Street
Boston, MA 02129
(617) 482-4703

Foley Buhl Roberts & Assoc., Inc.
Structural Engineers
2150 Washington Street
Newton, MA 02462
(617) 527-9600

Crabtree McGrath Assoc., Inc.
Food Service Consultants
161 West Main Street
Georgetown, MA 01833
(978) 352-8500

VAV International, Inc.
Mechanical Engineers
400 West Cummings Park S. 4700
Woburn, MA 01801
(781) 935-7228

Thompson Engineering Company, Inc.
Electrical Engineers
89 Newbury Street, Suite 103
Danvers, MA 01923
(617) 866-9066

EdVance Technology Design, Inc.
Technology Consultants
300 Brickstone Square, Suite 201
Andover, MA 01880
(978) 256-9900

KEY PLAN

N
Called North

NORTH ARROW *STAMP*

Date: 21 August 2020
Drawn By: FS
Scale: NONE

Revisions

Number	Date	Description

90% COST ESTIMATE SET

PLUMBING DETAILS

8.5.01

© 2020 DiNisco Design

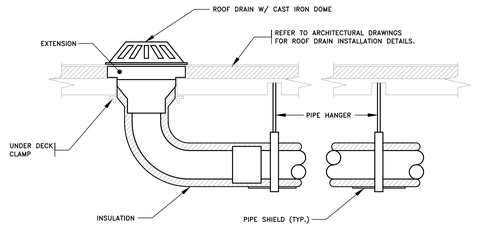

A 8.5.02 *ROOF DRAIN DETAIL*
NOT TO SCALE

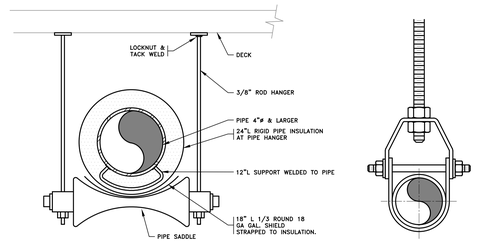

B 8.502 PIPE HANGER DETAIL
NOT TO SCALE

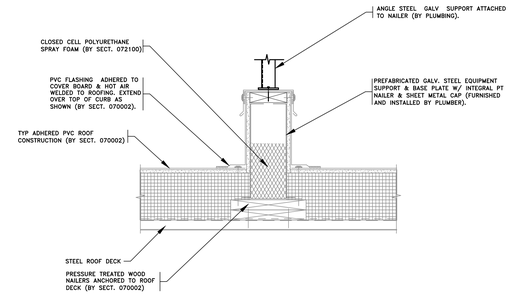

C 8.5.02 PIPE SUPPORT DETAIL (FOR GAS PIPING) (REFER TO ARCHITECTURAL 3.5 SERIES)
NOT TO SCALE

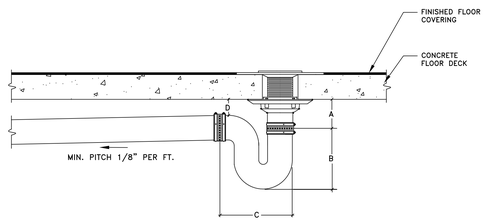

A	"A" DIMENSION IS DEPENDANT ON SPECIFIC FLOOR DRAIN MODEL, AND FLOOR SYSTEM INSTALLED. A 1" INSERTION INTO THE COUPLING IS ASSUMED.
B	3" NH P-TRAP = 7 1/8" 4" NH P-TRAP = 8 3/4"
C	3" NH P-TRAP = 10 5/8" 4" NH P-TRAP = 12 3/4"
D	3" NH P-TRAP = D = A – 1 3/8" 4" NH P-TRAP = D = A – 2 1/4"
	NOTE: ALL "B", & "C" DIMENSIONS ARE BASED ON CHARLOTTE PIPE PART NUMBER NH-42.

D 8.5.02 *FLOOR DRAIN CLEARANCE DETAIL*
NOT TO SCALE

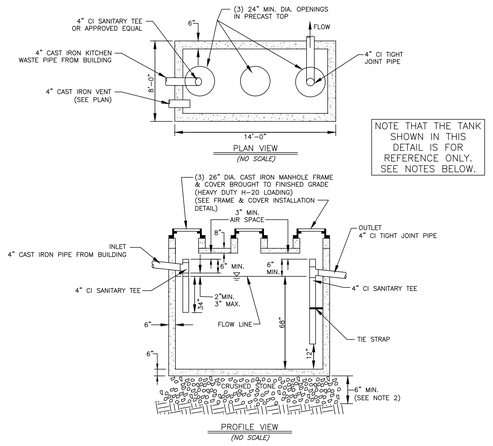

NOTES:
1. THE GREASE TRAP SHALL BE PROVIDED BY THE PLUMBING CONTRACTOR. ALL PIPING FROM THE BUILDING TO THE GREASE TRAP, INCLUDING ALL PIPING AND TEES WITHIN THE GREASE TRAP ARE TO BE BY THE PLUMBING CONTRACTOR.
2. THE SITE CONTRACTOR (SECTION 33300 SANITRAY SEWER) IS RESPONSIBLE FOR THE INSTALLATION OF THE GREASE TRAP AND SHALL PROVIDE AND INSTALL THE COVERS TO GRADE, PER THIS DETAIL AND DETAILS (2 / 1.3.15) & (5 / 1.3.15)
3. IF SIDE INLETS OR OUTLETS ARE USED, SANITARY TEES MUST BE BROUGHT TO THE CENTERLINE OF THE TANK AND LOCATED WITHIN 12" OF THE ENDWALL. TEE(S) SHALL BE SECURED TO TOP OF TANK WITH STAINLESS STEEL STRAPS AND 1/4" LAG BOLTS OR EQUAL. UNUSED OUTLETS TO BE PLUGGED WITH MORTAR.
4. CRUSHED STONE SHALL MEET MHD M2.01.0 AND M2.01.1.
5. DIMENSIONS SHOWN HERE ON ARE BASED ON SHEA CONCRETE PRODUCTS ITEM NO 8x14-35. *NOMINAL CAPACITY = 3,500 GALLONS, H-20 LOADING (MINIMUM)*

E 8.5.02 *EXTERIOR GREASE TRAP DETAIL*
NOT TO SCALE

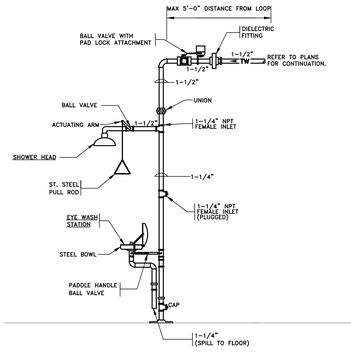

F 8.5.02 *EMERG. SHOWER/EYE WASH STATION PIPING DETAIL*
NOT TO SCALE

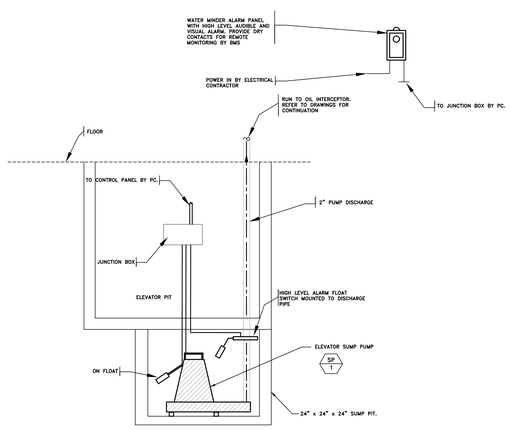

G 8.5.01 *ELEVATOR SUMP PUMP DETAIL*
NOT TO SCALE

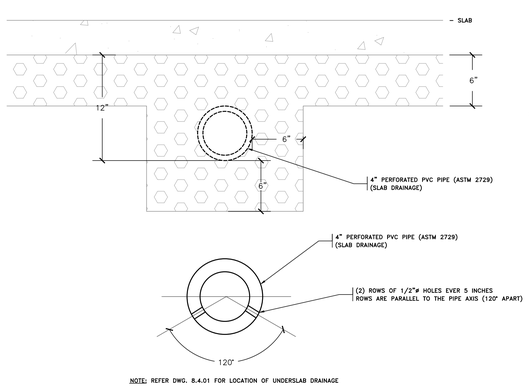

NOTE: REFER DWG. 8.4.01 FOR LOCATION OF UNDERSLAB DRAINAGE

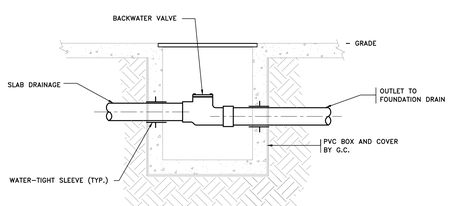

NOTES:
1. PIT DEPTH TO BE DETERMINED IN FIELD.
2. REFER TO PLANS FOR PIPE SIZES.

BACKWATER VALVE DETAIL

H 8.5.01 *SLAB DRAINAGE DETAILS*
NOT TO SCALE

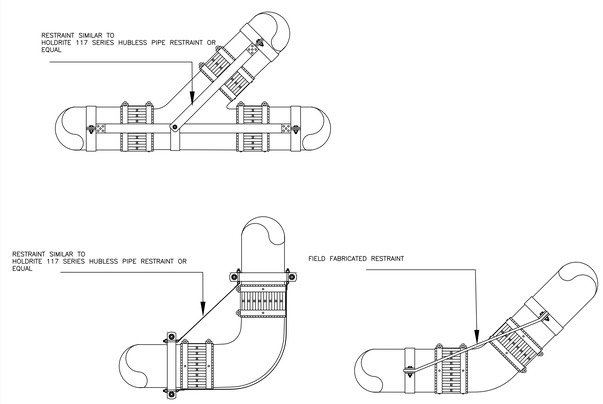

HORIZONTAL PIPE AND FITTINGS 5" AND LARGER SHALL BE SUITABLY BRACED TO PREVENT HORIZONTAL MOVEMENT. THIS MUST BE DONE AT EVERY BRANCH OPENING OR CHANGE IN DIRECTION BY THE USE OF BRACES, BLOCKS, RODDING OR OTHER SUITABLE METHOD, TO PREVENT MOVEMENT OR JOINT SEPARATION. THIS BRACING MAY BE FIELD FABRICATED OR A MANUFACTURED SYSTEM. THE DETAILS SHOWN ON THIS PAGE ILLUSTRATES SEVERAL METHODS OF BRACING.

I 8.5.01 PIPING RESTRAINTS FOR SANITARY AND RWL ABOVE 5"
NOT TO SCALE

AMESBURY ELEMENTARY SCHOOL

AMESBURY, MA

DINISCO DESIGN
architects + planners

99 Chauncy Street, Suite 901
Boston, MA 02111
(617) 426-2858

DGT Associates
Surveying & Engineers
1071 Worcester Road
Framingham, MA 01701
(508) 879-0030

Brown Sardina, Inc.
Landscape Architects
24 Roland Street
Boston, MA 02129
(617) 482-4703

Foley Buhl Roberts & Assoc., Inc.
Structural Engineers
2150 Washington Street
Newton, MA 02462
(617) 527-9600

Crabtree McGrath Assoc., Inc.
Food Service Consultants
161 West Main Street
Georgetown, MA 01833
(978) 352-8500

VAV International, Inc.
Mechanical Engineers
400 West Cummings Park S. 4700
Woburn, MA 01801
(781) 935-7228

Thompson Engineering Company, Inc.
Electrical Engineers
89 Newbury Street, Suite 103
Danvers, MA 01923
(617) 866-9066

EdVance Technology Design, Inc.
Technology Consultants
300 Brickstone Square, Suite 201
Andover, MA 01880
(978) 256-9900

KEY PLAN

N
Called North

NORTH ARROW | STAMP

Date: 21 August 2020

Drawn By: FS

Scale: NONE

Revisions

Number	Date	Description

90% COST ESTIMATE SET

PLUMBING DETAILS

8.5.02

© 2020 DiNisco Design

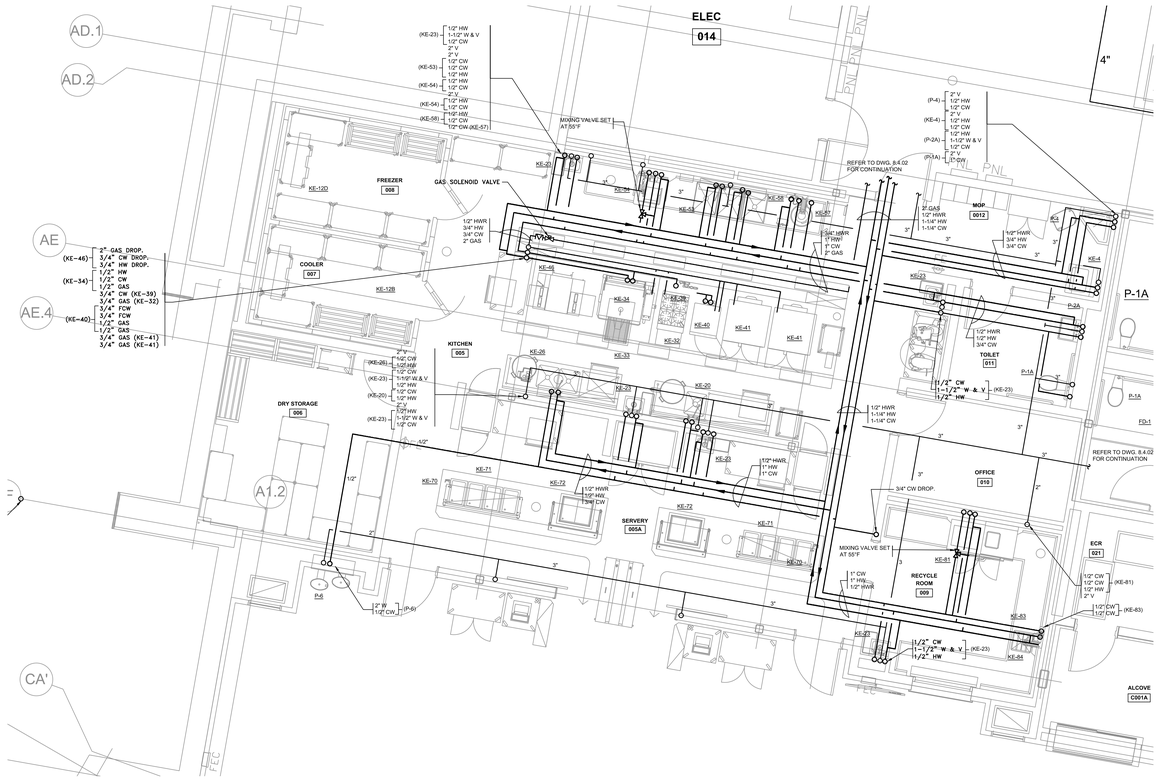

A 8.5.03 *ENLARGED PLUMBING PLAN (ABOVEGROUND)*

SCALE: 1/4" = 1'-0"

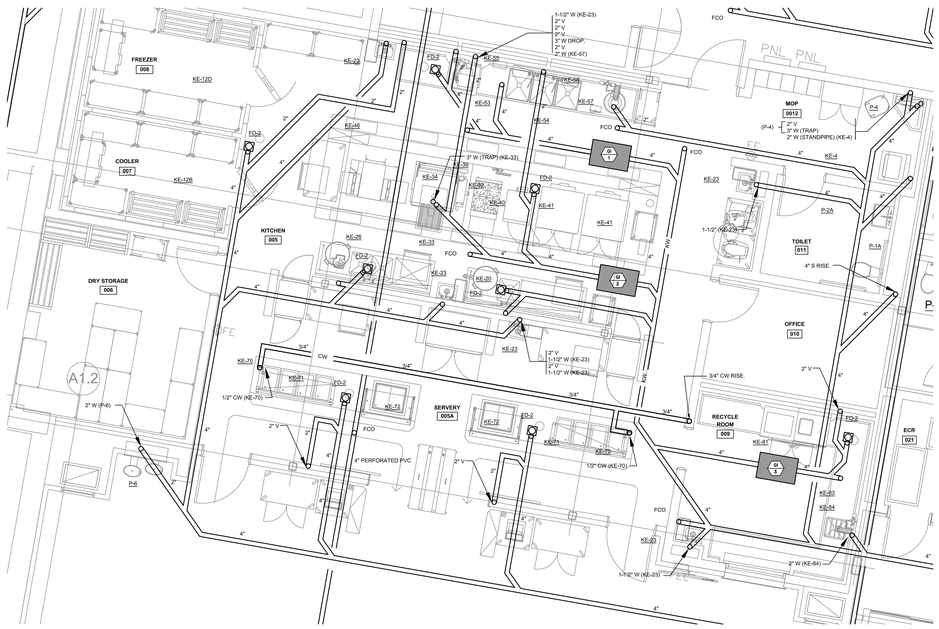

B 8.5.03 *ENLARGED PLUMBING PLAN (UNDERSLAB)*

SCALE: 1/4" = 1'-0"

AMESBURY ELEMENTARY SCHOOL

AMESBURY, MA

DINISCO DESIGN
architects + planners

99 Chauncy Street, Suite 901
Boston, MA 02111
(617) 426-2858

DGT Associates
Surveying & Engineers
1071 Worcester Road
Framingham, MA 01701
(508) 879-0030

Brown Sardina, Inc.
Landscape Architects
24 Roland Street
Boston, MA 02129
(617) 482-4703

Foley Buhl Roberts & Assoc., Inc.
Structural Engineers
2150 Washington Street
Newton, MA 02462
(617) 527-9600

Crabtree McGrath Assoc., Inc.
Food Service Consultants
161 West Main Street
Georgetown, MA 01833
(978) 352-8500

VAV International, Inc.
Mechanical Engineers
400 West Cummings Park S. 4700
Woburn, MA 01801
(781) 935-7228

Thompson Engineering Company, Inc.
Electrical Engineers
89 Newbury Street, Suite 103
Danvers, MA 01923
(617) 866-9066

EdVance Technology Design, Inc.
Technology Consultants
300 Brickstone Square, Suite 201
Andover, MA 01880
(978) 256-9900

KEY PLAN

NORTH ARROW — Called North

STAMP

Date: 21 August 2020

Drawn By: FS

Scale: NONE

Revisions

Number	Date	Description

90% COST ESTIMATE SET

ENLARGED KITCHEN PLUMBING PLANS

8.5.03

© 2020 DiNisco Design

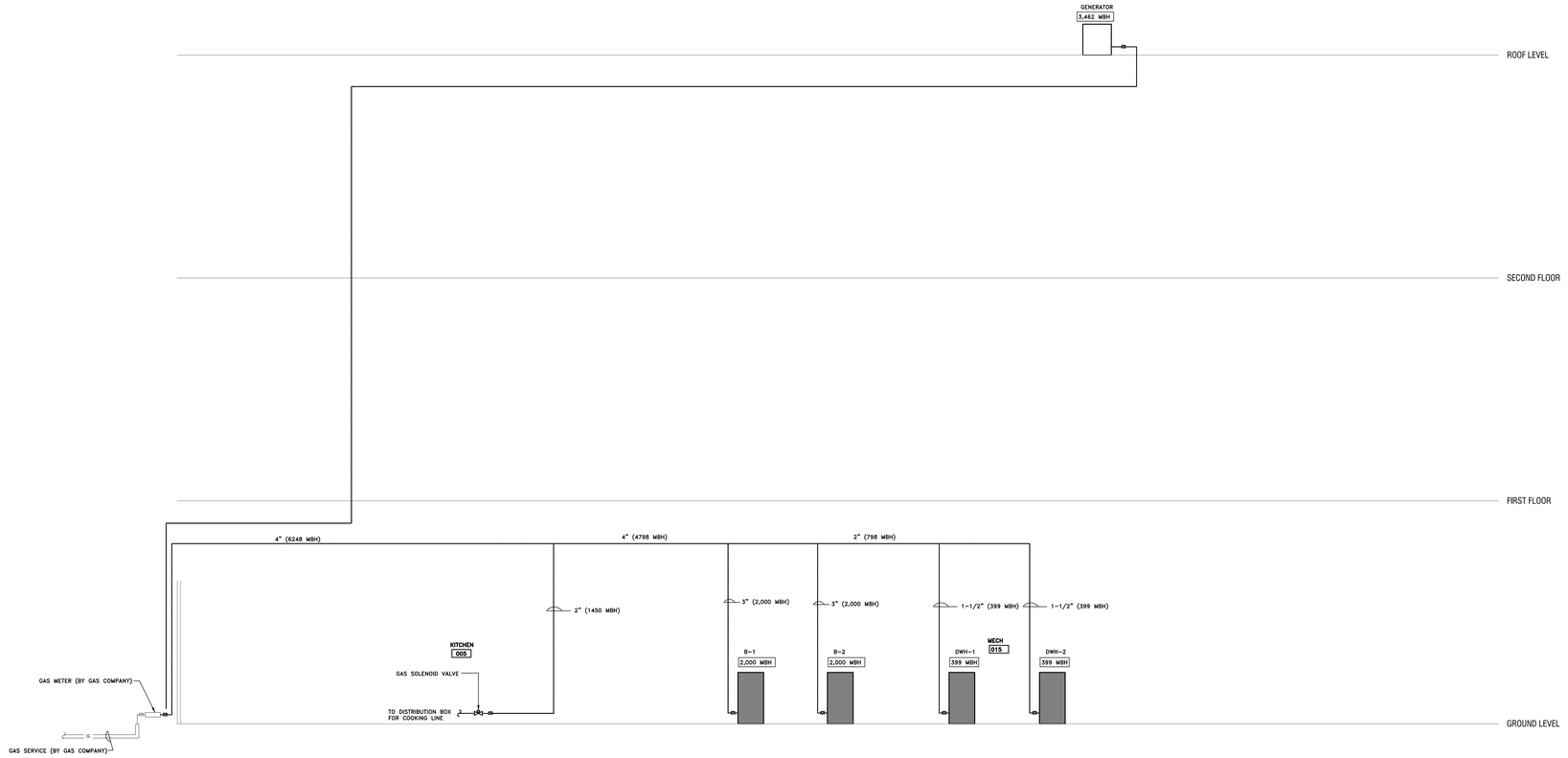

B 8.5.03 *GAS RISER DIAGRAM*
NOT TO SCALE

AMESBURY ELEMENTARY SCHOOL

AMESBURY, MA

DINISCO DESIGN
architects + planners
99 Chauncy Street, Suite 901
Boston, MA 02111
(617) 426-2858

DGT Associates
Surveying & Engineers
1071 Worcester Road
Framingham, MA 01701
(508) 879-0030

Brown Sardina, Inc.
Landscape Architects
24 Roland Street
Boston, MA 02129
(617) 482-4703

Foley Buhl Roberts & Assoc., Inc.
Structural Engineers
2150 Washington Street
Newton, MA 02462
(617) 527-9600

Crabtree McGrath Assoc., Inc.
Food Service Consultants
161 West Main Street
Georgetown, MA 01833
(978) 352-8500

VAV International, Inc.
Mechanical Engineers
400 West Cummings Park S. 4700
Woburn, MA 01801
(781) 935-7228

Thompson Engineering Company, Inc.
Electrical Engineers
89 Newbury Street, Suite 103
Danvers, MA 01923
(617) 866-9066

EdVance Technology Design, Inc.
Technology Consultants
300 Brickstone Square, Suite 201
Andover, MA 01880
(978) 256-9900

KEY PLAN

N Called North

NORTH ARROW

STAMP

Date: 21 August 2020

Drawn By: FS

Scale: NONE

Revisions

Number	Date	Description

90% COST ESTIMATE SET

GAS RISER DIAGRAM

8.5.04

© 2020 DiNisco Design

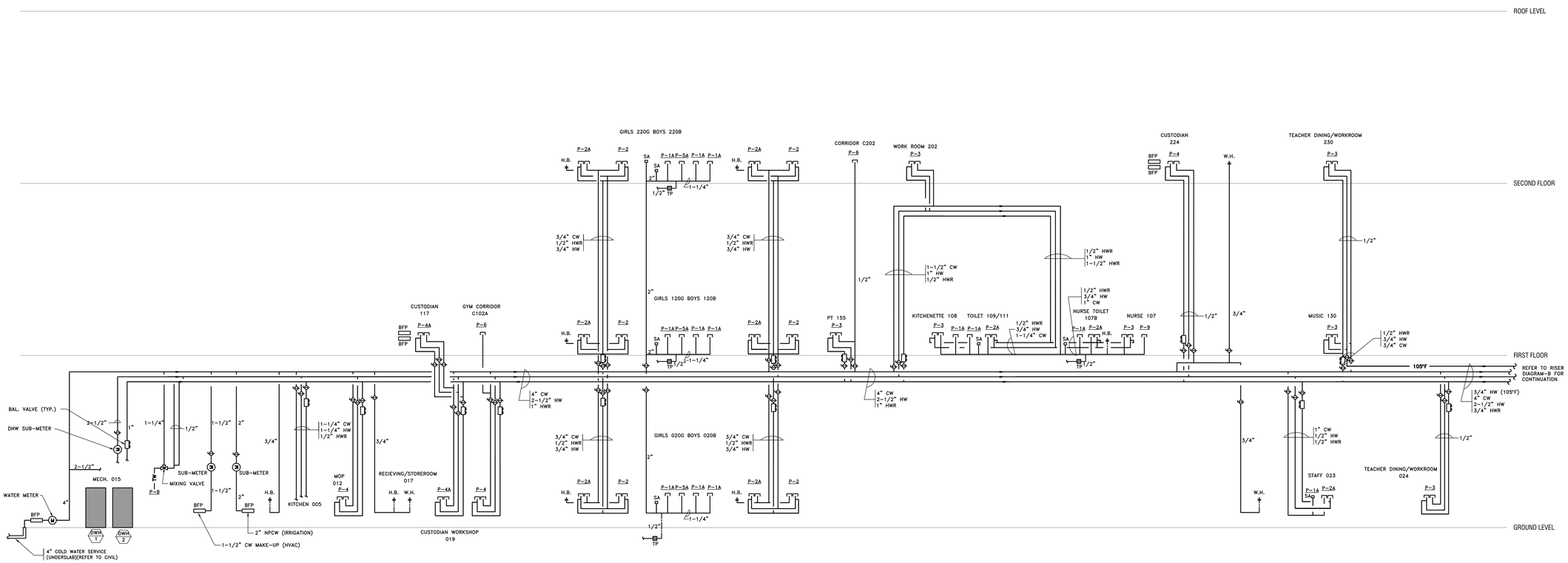

A 8.5.05 *WATER PIPING RISER DIAGRAM*
NOT TO SCALE

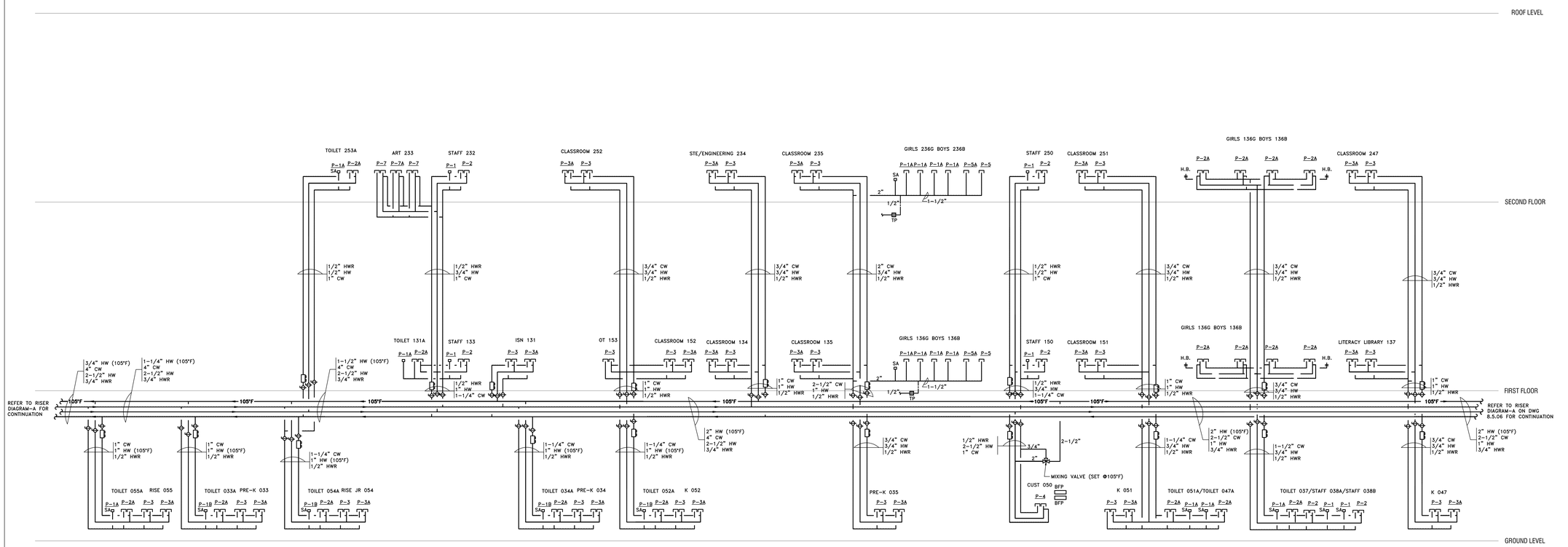

B 8.5.05 *WATER PIPING RISER DIAGRAM*
NOT TO SCALE

AMESBURY ELEMENTARY SCHOOL

AMESBURY, MA

DINISCO DESIGN
architects + planners
99 Chauncy Street, Suite 901
Boston, MA 02111
(617) 426-2858

DGT Associates
Surveying & Engineers
1071 Worcester Road
Framingham, MA 01701
(508) 879-0030

Brown Sardina, Inc.
Landscape Architects
24 Roland Street
Boston, MA 02129
(617) 482-4703

Foley Buhl Roberts & Assoc., Inc.
Structural Engineers
2150 Washington Street
Newton, MA 02462
(617) 527-9600

Crabtree McGrath Assoc., Inc.
Food Service Consultants
161 West Main Street
Georgetown, MA 01833
(978) 352-8500

VAV International, Inc.
Mechanical Engineers
400 West Cummings Park S. 4700
Woburn, MA 01801
(781) 935-7228

Thompson Engineering Company, Inc.
Electrical Engineers
89 Newbury Street, Suite 103
Danvers, MA 01923
(617) 866-9066

EdVance Technology Design, Inc.
Technology Consultants
300 Brickstone Square, Suite 201
Andover, MA 01880
(978) 256-9900

KEY PLAN

NORTH ARROW — STAMP

Date: 21 August 2020

Drawn By: FS

Scale: NONE

Revisions

Number	Date	Description

90% COST ESTIMATE SET

WATER PIPING RISER DIAGRAMS

8.5.05

© 2020 DiNisco Design

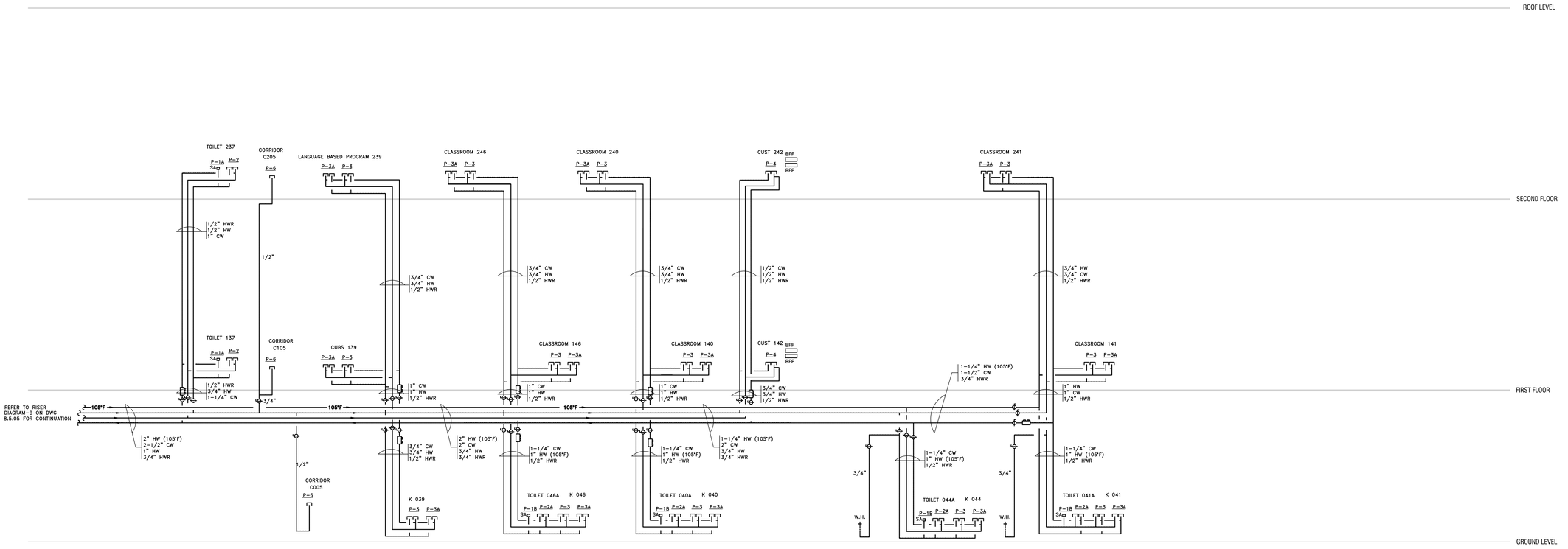

A 8.5.06 *WATER PIPING RISER DIAGRAM*
NOT TO SCALE

AMESBURY ELEMENTARY SCHOOL

AMESBURY, MA

DINISCO DESIGN
architects + planners

99 Chauncy Street, Suite 901
Boston, MA 02111
(617) 426-2858

DGT Associates
Surveying & Engineers
1071 Worcester Road
Framingham, MA 01701
(508) 879-0030

Brown Sardina, Inc.
Landscape Architects
24 Roland Street
Boston, MA 02129
(617) 482-4703

Foley Buhl Roberts & Assoc., Inc.
Structural Engineers
2150 Washington Street
Newton, MA 02462
(617) 527-9600

Crabtree McGrath Assoc., Inc.
Food Service Consultants
161 West Main Street
Georgetown, MA 01833
(978) 352-8500

VAV International, Inc.
Mechanical Engineers
400 West Cummings Park S. 4700
Woburn, MA 01801
(781) 935-7228

Thompson Engineering Company, Inc.
Electrical Engineers
89 Newbury Street, Suite 103
Danvers, MA 01923
(617) 866-9066

EdVance Technology Design, Inc.
Technology Consultants
300 Brickstone Square, Suite 201
Andover, MA 01880
(978) 256-9900

KEY PLAN

N
Dalled North

NORTH ARROW

STAMP

Date: 21 August 2020

Drawn By: FS

Scale: NONE

Revisions

Number	Date	Description

90% COST ESTIMATE SET

RISER DIAGRAMS

8.5.06

© 2020 DiNisco Design

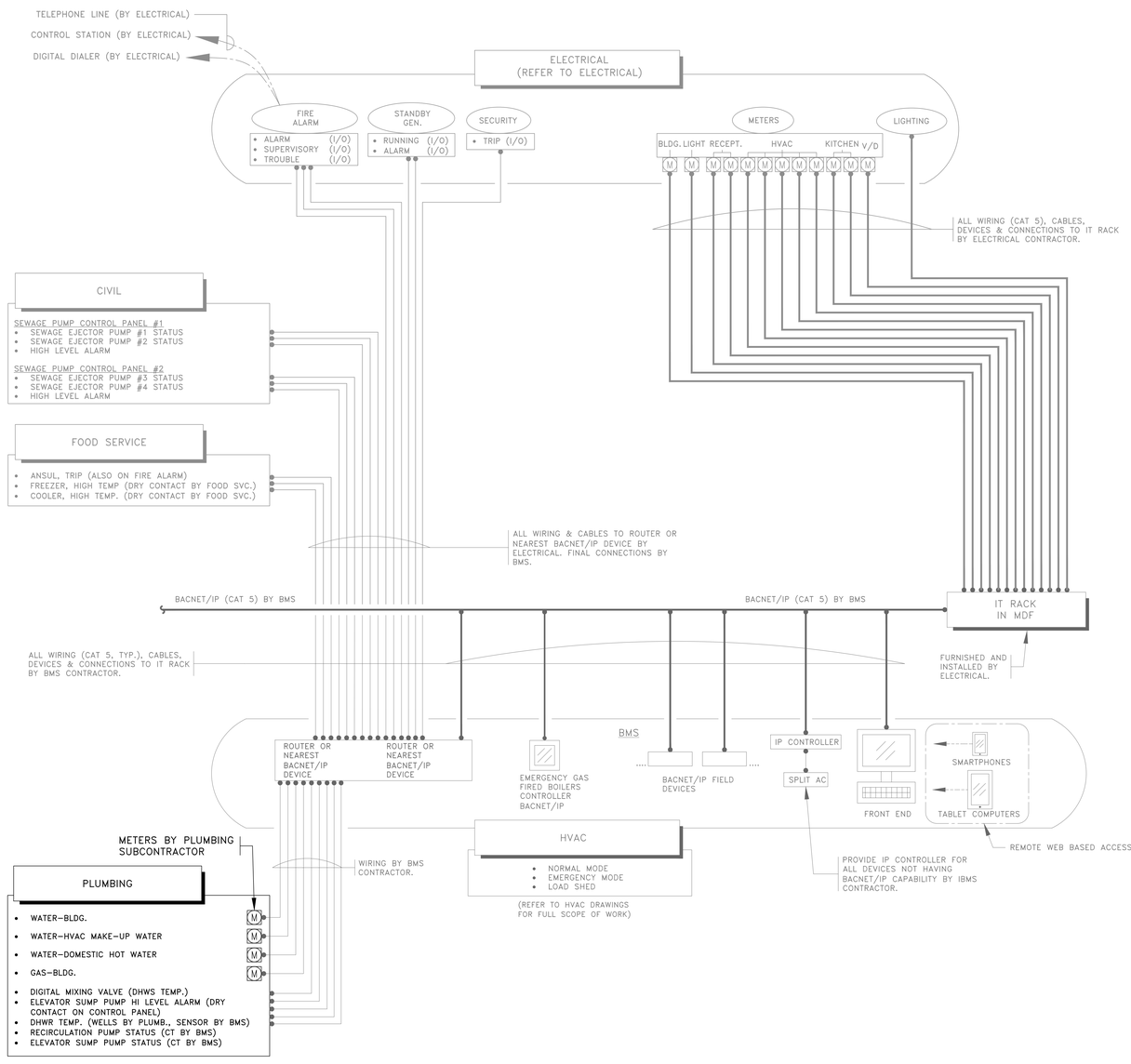

INTEGRATED BUILDING MANAGEMENT SYSTEM (IBMS) ARCHITECTURE

(ALL WORK BY BMS/IBMS UNLESS INDICATED OTHERWISE)

AMESBURY ELEMENTARY SCHOOL

AMESBURY, MA

DINISCO DESIGN
architects + planners

99 Chauncy Street, Suite 901
Boston, MA 02111
(617) 426-2858

DGT Associates
Surveying & Engineers
1071 Worcester Road
Framingham, MA 01701
(508) 879-0030

Brown Sardina, Inc.
Landscape Architects
24 Roland Street
Boston, MA 02129
(617) 482-4703

Foley Buhl Roberts & Assoc., Inc.
Structural Engineers
2150 Washington Street
Newton, MA 02462
(617) 527-9600

Crabtree McGrath Assoc., Inc.
Food Service Consultants
161 West Main Street
Georgetown, MA 01833
(978) 352-8500

VAV International, Inc.
Mechanical Engineers
400 West Cummings Park S. 4700
Woburn, MA 01801
(781) 935-7228

Thompson Engineering Company, Inc.
Electrical Engineers
89 Newbury Street, Suite 103
Danvers, MA 01923
(617) 866-9066

EdVance Technology Design, Inc.
Technology Consultants
300 Brickstone Square, Suite 201
Andover, MA 01880
(978) 256-9900

KEY PLAN

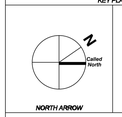

NORTH ARROW | STAMP

Date: 21 August 2020

Drawn By: FS

Scale: NONE

Revisions

Number	Date	Description

90% COST ESTIMATE SET

PLUMBING INTEGRATED BUILDING MANAGEMENT SYSTEM

8.5.07

© 2020 DiNisco Design

BOILER SCHEDULE

TAG NO.	BASIS OF SELECTION	LOCATION	SERVICE	TYPE	PERFORMANCE DATA										BURNER DATA		ELECTRICAL DATA				OPER. WEIGHT (LBS)	REMARKS
					INPUT (MBH)	OUTPUT (MBH)	FUEL	EWT (°F)	LWT (°F)	ASME WP	PRESS. RELIEF VALVE	DESIGN GPM	MIN. GPM	WPD (ft.)	FLUID	MODULATION RAGE	GAS PRESS. RANGE	VOLTS	PH	FLA	MCA		
B-1, 2	LOCHINVAR CREST FBN2001	MECH. RM.	SPACE HEATING HOT WATER	HIGH EFFICIENCY CONDENSING	2,000	1,860	NAT. GAS.	100	140	160	100#	93	25	8.5	40% PG	25:1	4"-14"	120	1	13	16	2,570	SEQUENCER CONTROL PANEL WITH BACNET INTERFACE, TEMPERATURE SENSORS, FLOW SWITCH, LIME CHIP POLYPROPYLENE NEUTRALIZATION KIT BY MFG., SS HX, LOW LIMIT CUT-OFF, FLUES SELECTED & FURNISHED BY BOILER MANUFACTURER, 100# ASME PRESSURE RELIEF.

AIR-COOLED CHILLER SCHEDULE

TAG NO.	MAKE & MODEL	EVAPORATOR & PERFORMANCE DATA										COMPRESSOR & ELECTRICAL DATA								OPERATING WEIGHT (LBS.)	ACCESSORIES & ADDITIONAL INFORMATION						REMARKS
		DESIGN GPM	MIN. GPM	EWT/LWT (°F)	FULL LOAD (EER)	IPLV (EER)	NPLV (EER)	FLUID	CONFIG.	WPD (ft. wtr.)	TC (TONS)	FF	RLA (CKT 1)	RLA (CKT 2)	V/PH	MCA	MOCP	TYPE	REF. TYPE	REF. CHARGE (LBS.)		CONTROL PANEL	EXTENDED COMP. WARR.	COMP. & COND. MOTOR SPEED	UNIT DISCONNECT	CHILLER INSULATION	VIBRATION ISOLATION	
CH-1	DAIKIN TRAILBLAZER AGZ241E	474.4	229.5	56/44	10.06	16.43	-	30% PG	2 PASS	10.7	223.9	0.00010	3@76.0	3@76.0	460/3	532	600.0	SCROLL	R-410A	222 LBS	9,688	MICRO-PROCESSOR	5 YEARS	INTEGRAL VFD	NON-FUSED	FIELD APPLIED AS PER MANF. REQ.	OUTDOOR RATED, 2" DEFLECTION w/ SEISMIC RESTRAINTS	MANUFACTURER START-UP, BACNET INTERFACE CARD, 5 YEAR COMPRESSOR WARRANTY, VIBRATION ISOLATORS, LOW AMBIENT CONTROLS, CONDENSER COIL GUARDS, CONVENIENCE OUTLET, 2.0" SD SPRING ISOLATORS, LOW NOISE COND. FANS, ACOUSTICAL COMPRESSOR WRAP, PREMIUM ACOUSTICAL PACKAGE.

NOTES:
1. CHILLER SOUND POWER SHALL NOT EXCEED THE VALUES SCHEDULED, WHEN TESTED IN ACCORDANCE WITH AHRI 370. SUBMIT OCTAVE BAND SOUND POWER LEVELS.
2. PERFORMANCES LISTED ARE BASED ON 30% PG.
3. MINIMUM CONTINUOUS OPERATING CAPACITY SHALL BE NO LESS THAN 10%, HGBP IF REQUIRED.

CHILLER SOUND DATA (CH-1)

	OCTAVE BAND								REMARKS
	1 (63 Hz)	2 (125 Hz)	3 (250 Hz)	4 (500 Hz)	5 (1000 Hz)	6 (2000 Hz)	7 (4000 Hz)	8 (8000 Hz)	
SOUND POWER LEVEL	98 dB	98 dB	98 dB	95 dB	96 dB	90 dB	90 dB	86 dB	BASED ON DAIKIN TRAILBLAZER AGZ241E. OVERALL SOUND POWER LEVELS SHALL NOT EXCEED __ dBA. LEVELS IN INDIVIDUAL OCTAVES MAY EXCEED SCHEDULED VALUES BY UP TO 3 dB. NO OCTAVE BAND SOUND POWER LEVEL SHALL EXCEED BOTH OF THE ADJACENT BAND LEVELS BY 3 dB OR MORE.

ROOFTOP UNIT SCHEDULE

TAG NO.	BASIS OF SELECTION	LOCATION	SERVICE	SUPPLY FAN DATA							O.A.	DX COOLING COIL DATA								HEATING COIL DATA						POWERED EXHAUST FAN DATA							FILTER DATA				ELECTRICAL DATA											APPROXIMATE DIMENSIONS	OPER. WEIGHT	REMARKS
				CFM	ESP (in. w.c.)	BHP	HP	RPM	MOTOR TYPE	MODULATION		CFM	EDB/EWB (°F)	LDB/LWB (°F)	TC (MBH)	SC (MBH)	REFRIG. TYPE	REFRIG. CHARGE (lbs.)	EER	# OF COMP.	MODULATION	CAPACITY (MBH)	EAT (°F)	LAT (°F)	EWT/LWT (°F)	FLUID	GPM	CFM	ESP (in. w.c.)	BHP	HP	RPM	MOTOR TYPE	MODULATION	PRE-FILTER		FINAL-FILTER		COMPRESSOR		CONDENSER									
																																		MERV	FILTER DEPTH	MERV	FILTER DEPTH	QTY.	TYPE	AMPS	# OF FANS	FLA	MCA	MOCP	VOLT	PH			
RTU-1	DAIKIN REBEL DPS-12A NOM. 12-TON VAV	ROOF	ADMINISTRATION	4,000	3.5"	4.87	8.0	1,711	PREM. EFF.	ECM	700	4,000	77.3/64.3	52.1/52.1	142.9	110.0	R-410A	20.0	11.6	2	INVERTER COMP. LEAD	107.2	58.0	82.5	140/125.0	40% PG	15.4	4,000	1.5"	1.89	4.0	2,212	PREM. EFF.	ECM	8	2"	14	4"	2	1@INV., 1@FIXED	1@6.8 1@7.9	2	1.8	28.6	35.0	460	3	7'-7" L x 8'-1" W x 4'-9" H	2,362	SEE NOTES

NOTES:

1. MERV 8 PRE-FILTERS
2. MERV 13 FILTERS
3. HINGED ACCESS DOOR
4. CONVENIENCE OUTLET POWERED SEPARATELY SO OUTLET CAN BE USED WHEN UNIT IS DOWN (115V/1PH CIRCUIT)
5. DOUBLE WALL CONSTRUCTION WITH R-13 INSULATION
6. O.A. & E.A. HOODS
7. LOW LEAKAGE ACD'S
8. COMPARATIVE ENTHALPY ECONOMIZER
9. ECM FANS
10. PIEZO RINGS ON ALL FANS
11. S/S DRAIN PAN
12. 5-YEAR COMPRESSOR WARRANTY
13. INVERTER OR DIGITAL SCROLL COMPRESSOR ON LEAD STAGE
14. CONDENSER HAIL GUARDS
15. 100% MODULATING POWERED EXHAUST
16. SEISMICALLY RATED VIBRATION ISOLATION CURB
17. OPERATING WEIGHTS AND UNIT HEIGHT DO NOT INCLUDE ROOF CURB
18. UNITS ABOVE 2,000 CFM SHALL HAVE A FIELD INSTALLED SMOKE DETECTOR IN THE RETURN AND SUPPLY AIR DUCTS
19. INTERNALLY ISOLATED FANS & COMPRESSORS
20. FANS SHALL BE SELECTED SUCH THAT THE OPERATING POINT TSP DOES NOT EXCEED 95% OF THE MAXIMUM STABLE TSP AT THE SAME FAN SPEED
21. ESP ACCOUNTS FOR DIRTY FILTERS. INTERNAL STATIC PRESSURE SHALL ACCOUNT FOR CLEAN FILTERS ONLY

MAKE-UP AIR UNIT SCHEDULE

TAG NO.	BASIS OF SELECTION	LOCATION	SERVICE	SUPPLY FAN DATA										MIN. O.A.	COOLING COIL DATA											HEATING COIL DATA											FILTER DATA								ELECTRICAL DATA										APPROXIMATE DIMENSIONS	OPER. WEIGHT (LBS)	REMARKS
				CFM	ESP (in. w.c.)	BHP	HP	RPM	VOLT	PH	MOTOR TYPE	MODULATION	DRIVE		CFM	TC (MBH)	SC (MBH)	AMB. (F)	EDB/EWB (°F)	COIL LDB/LWB (°F)	EWT/LWT (°F)	FLUID	GPM	NO. ROWS	FACE VELOCITY (FPM)	APD (in. w.c.)	WPD (ft. wtr.)	CAPACITY (MBH)	AMB. (F)	EAT (°F)	LAT (°F)	EWT/LWT (°F)	FLUID	GPM	NO. ROWS	FACE VELOCITY (FPM)	MAX APD (in. w.c.)	MAX WPD (ft. wtr.)	PRE-FILTER			FINAL-FILTER				CIRCUIT 1			CIRCUIT 2			CIRCUIT 3								
																																												SUPPLY FAN			LIGHTS			CONV. OUTLET								
																																												MERV	FILTER DEPTH	INITIAL PRESSURE DROP (in. w.c.)	FINAL PRESSURE DROP (in. w.c.)	MERV	FILTER DEPTH	INITIAL PRESSURE DROP (in. w.c.)	FINAL PRESSURE DROP (in. w.c.)	MCA	MOCP	V/PH	MCA	MOCP	V/PH	MCA	MOCP	V/PH					
MAU-1	DAIKIN CAH017GDGM	INDOORS	KITCHEN	6,800	2.5	2@4.69	2@7.5	3,662	460	3	PREM. EFF., INV. DUTY	VFD	DIRECT	6,800	6,800	470.1	257.0	88	88/74	53.4/53.2	44/56	30% PG	80.1	10	426	0.90	10.1	603.1	0	0	81.1	140/100	40% PG	32.1	3	426	0.31	9.3	8	2"	0.14	0.39	14	4"	0.46	1.21	19.8	25.0	460/3	-	15	115/1	-	15	115/1	14'-0" L x 6'-0" W x 4'-6" H	3,316	SEE NOTES

AIR HANDLING UNIT SCHEDULE

TAG NO.	BASIS OF SELECTION	LOCATION	SERVICE	SUPPLY FAN DATA										NORMAL O.A.	EVENT O.A.	COOLING COIL DATA													HEATING COIL DATA										RETURN FAN DATA									
				CFM	ESP (in. w.c.)	BHP	HP	RPM	VOLT	PH	MOTOR TYPE	MODULATION	DRIVE			CFM	TC (MBH)	SC (MBH)	AMB. (F)	EDB/EWB (°F)	COIL LDB/LWB (°F)	EWT/LWT (°F)	FLUID	GPM	NO. ROWS	FACE VELOCITY (FPM)	APD (in. w.c.)	WPD (ft. wtr.)	CAPACITY (MBH)	AMB. (F)	EAT (°F)	LAT (°F)	EWT/LWT (°F)	FLUID	GPM	NO. ROWS	FACE VELOCITY (FPM)	MAX APD (in. w.c.)	MAX WPD (ft. wtr.)	CFM	ESP (in. w.c.)	BHP	HP	RPM	VOLT	PH	MOTOR TYPE	MODULATION	DRIVE
AHU-1	DAIKIN OAH029GDHM	ROOF	GYMNASIUM	11,000	2.5	2@7.82	2@10	3,447	460	3	PREM. EFF. INV. DUTY	VFD	DIRECT	2,300	5,500	11,000	586.0	365.6	88	81.5/68.4	51.1/50.9	44/56	30% PG	103.5	8	406	0.81	16.4	684.6	0	35.0	91.9	140/100	40% PG	35.7	3	406	0.28	6.0	11,000	1.5	2@3.49	2@5.0	2,849	460	3	PREM. EFF. INV. DUTY	VFD	DIRECT
AHU-2	DAIKIN OAH026GDHM	ROOF	CAFETERIA	10,000	2.5	2@6.96	2@10	3,283	460	3	PREM. EFF. INV. DUTY	VFD	DIRECT	1,900	3,800	10,000	517.6	331.6	88	80.0/67.0	49.7/49.5	44/56	30% PG	88.9	10	410	0.97	17.7	584.0	0	43.0	96.4	140/100	40% PG	30.7	3	410	0.22	4.7	10,000	1.5	2@2.89	2@5.0	2,642	460	3	PREM. EFF. INV. DUTY	VFD	DIRECT
AHU-3	DAIKIN OAH014GDGM	ROOF	MEDIA CENTER	6,000	2.5	1@7.75	1@10.0	2,229	460	3	PREM. EFF. INV. DUTY	VFD	DIRECT	1,200	N/A	6,000	285.6	159.3	88	77.6/68.4	53.3/53.1	44/56	30% PG	48.9	8	453	0.79	18.7	265.0	0	56.0	96.4	140/100	40% PG	13.8	3	453	0.24	12.9	6,000	1.5	1@2.85	1@5.0	1,686	460	3	PREM. EFF. INV. DUTY	VFD	DIRECT

AIR HANDLING UNIT SCHEDULE (CONTINUED)

TAG NO.	FILTER DATA								ELECTRICAL DATA												APPROXIMATE DIMENSIONS	OPER. ** WEIGHT (LBS)	REMARKS
	PRE-FILTER				FINAL-FILTER				CIRCUIT 1			CIRCUIT 2			CIRCUIT 3			CIRCUIT 4					
	MERV	FILTER DEPTH	INITIAL PRESSURE DROP (in. w.c.)	FINAL PRESSURE DROP (in. w.c.)	MERV	FILTER DEPTH	INITIAL PRESSURE DROP (in. w.c.)	FINAL PRESSURE DROP (in. w.c.)	SUPPLY FAN			RETURN FAN			LIGHTS			CONV. OUTLET					
									MCA	MOCP	V/PH	MCA	MOCP	V/PH	MCA	MOCP	V/PH	MCA	MOCP	V/PH			
AHU-1	8	2"	0.15	0.40	14	12"	0.31	1.06	27.2	35.0	460/3	13.7	15.0	460/3	-	15	115/1	-	15	115/1	30'-2" L x 6'-6" W x 6'-6" H	9,292	SEE NOTES
AHU-2	8	2"	0.14	0.39	14	12"	0.30	1.05	27.2	35.0	460/3	13.7	15.0	460/3	-	15	115/1	-	15	115/1	30'-6" L x 6'-6" W x 6'-0" H	9,338	SEE NOTES
AHU-3	8	2"	0.20	0.45	14	12"	0.43	1.18	15.6	25.0	460/3	8.25	15.0	460/3	-	15	115/1	-	15	115/1	24'-10" L x 5'-6" W x 4'-4" H	5,277	SEE NOTES

NOTES:

1. MERV 8 PRE-FILTERS
2. MERV 14 FILTERS
3. HINGED ACCESS DOOR & MARINE LED LIGHTS IN EACH SECTION POWERED SEPARATELY (115V/1PH CIRCUIT)
4. CONVENIENCE OUTLET POWERED SEPARATELY SO OUTLET CAN BE USED WHEN UNIT IS DOWN (115V/1PH CIRCUIT)
5. DOUBLE WALL CONSTRUCTION WITH R-13 INSULATION
6. O.A. & E.A. HOODS
7. LOW LEAKAGE ACD'S
8. SHAFT GROUNDING RINGS ON MOTORS W/ VFD
9. COMPARATIVE ENTHALPY ECONOMIZER
10. VFD'S ON ALL FANS WITH AUTO-BYPASS AND BACNET INTERFACE
11. PIEZO RINGS ON ALL FANS
12. PIPE CABINET ON UNITS LOCATED OUTSIDE
13. S/S DRAIN PAN
14. SEISMICALLY RATED VIBRATION ISOLATION CURB. PROVIDE CUSTOM ROOF CURB TO ALLOW RETURN DUCTWORK TO RUN THE LENGTH OF THE UNITS AND DISCHARGE BELOW THE SUPPLY DUCTWORK.
15. OPERATING WEIGHTS AND UNIT HEIGHT DO NOT INCLUDE ROOF CURB
16. UNITS ABOVE 2,000 CFM SHALL HAVE A SMOKE DETECTOR IN THE RETURN AND SUPPLY AIR DUCTS
17. INTERNALLY ISOLATED DIRECT DRIVE PLENUM AIRFOIL FANS
18. FANS SHALL BE SELECTED SUCH THAT THE OPERATING POINT TSP DOES NOT EXCEED 95% OF THE MAXIMUM STABLE TSP AT THE SAME FAN SPEED
19. REFER TO CONTROLS DIAGRAMS FOR INTENDED ORDER OF COMPONENTS
20. ESP ACCOUNTS FOR DIRTY FILTERS. INTERNAL STATIC PRESSURE SHALL ACCOUNT FOR CLEAN FILTERS ONLY
21. DAMPER ACTUATORS SHALL BE LOCATED INSIDE THE UNIT.
22. IF PIPING CABINET IS FIELD PROVIDED SEPARATELY FROM UNIT, THE CABINET SIZE SHALL BE FULLY COORDINATED WITH THE UNIT LAYOUT AND SHALL NOT BLOCK ANY ACCESS DOORS.

ENERGY RECOVERY UNIT SCHEDULE

TAG NO.	BASIS OF SELECTION	LOCATION	SERVICE	SUPPLY FAN DATA										MIN. O.A.	HEAT RECOVERY DATA (ENTHALPY WHEEL)																HEAT RECOVERY DATA (RE-HEAT WHEEL)															
				CFM	ESP (in. w.c.)	BHP	HP	RPM	VOLT	PH	MOTOR TYPE	MODULATION	DRIVE		TYPE	APD (in. w.c.)	COOLING RECOVERY (MBH)	SUPPLY SIDE (SUMMER)			EXHAUST SIDE (SUMMER)			HEATING RECOVERY (MBH)	SUPPLY SIDE (WINTER)			EXHAUST SIDE (WINTER)			HEAT WHEEL MOTOR DATA			TYPE	APD (in. w.c.)	SUPPLY SIDE (SUMMER)			EXHAUST SIDE (SUMMER)			HEATING RECOVERY (MBH)	SUPPLY SIDE (WINTER)			EXHAUST SIDE (WINTER)			HEAT WHEEL MOTOR DATA		
																		CFM	EDB/EWB (°F)	LDB/LWB (°F)	CFM	EDB/EWB (°F)	LDB/LWB (°F)		CFM	EDB (°F)	LDB (°F)	CFM	EDB (°F)	LDB (°F)	HP	V	PH			CFM	EDB/EWB (°F)	LDB/LWB (°F)	CFM	EDB/EWB (°F)	LDB/LWB (°F)		CFM	EDB (°F)	LDB (°F)	CFM	EDB (°F)	LDB (°F)	HP	V	PH
ERU-1	HAAKON	ROOF	CLASSROOMS	12,000	2.5	1@17.9	1@25	1,949	460	3	PREM. EFF. INV. DUTY	VFD	DIRECT	12,000	ENERGY WHEEL	0.89	360.2	12,000	88/74	72.8/66.1	12,000	64.3/60.9	81.2/70.6	441.9	12,000	0	34.1	12,000	51.9	14.0	1/2	460	3	ENERGY WHEEL	0.89	12,000	51.6/51.6	64.3/54.3	12,000	75.0/62.5	64.3/60.9	277.3	12,000	34.1	55.2	12,000	70.0	51.9	1/2	460	3
ERU-2	HAAKON	ROOF	CLASSROOMS	12,000	2.5	1@17.9	1@25	1,949	460	3	PREM. EFF. INV. DUTY	VFD	DIRECT	12,000	ENERGY WHEEL	0.89	360.2	12,000	88/74	72.8/66.1	12,000	64.3/60.9	81.2/70.6	441.9	12,000	0	34.1	12,000	51.9	14.0	1/2	460	3	ENERGY WHEEL	0.89	12,000	51.6/51.6	64.3/54.3	12,000	75.0/62.5	64.3/60.9	277.3	12,000	34.1	55.2	12,000	70.0	51.9	1/2	460	3

ENERGY RECOVERY UNIT SCHEDULE (CONTINUED)

TAG NO.	COOLING COIL DATA										HEATING COIL DATA										EXHAUST FAN DATA									FILTER DATA								ELECTRICAL DATA										APPROXIMATE DIMENSIONS	OPER. WEIGHT (LBS)	REMARKS
	CFM	TC (MBH)	SC (MBH)	AMB. (F)	EDB/EWB (°F)	COIL LDB/LWB (°F)	EWT/LWT (°F)	FLUID	GPM	NO. ROWS	FACE VELOCITY (FPM)	APD (in. w.c.)	WPD (ft. wtr.)	CAPACITY (MBH)	AMB. (F)	EAT (°F)	LAT (°F)	EWT/LWT (°F)	FLUID	GPM	NO. ROWS	FACE VELOCITY (FPM)	APD (in. w.c.)	WPD (ft. wtr.)	CFM	ESP (in. w.c.)	BHP	HP	RPM	VOLT	PH	MOTOR TYPE	MODULATION	DRIVE	PRE-FILTER				FINAL-FILTER				CIRCUIT 1				CIRCUIT 2				CIRCUIT 3			CIRCUIT 4					
																																			MERV	FILTER DEPTH	INITIAL PRESSURE DROP (in. w.c.)	FINAL PRESSURE DROP (in. w.c.)	MERV	FILTER DEPTH	INITIAL PRESSURE DROP (in. w.c.)	FINAL PRESSURE DROP (in. w.c.)	SUPPLY FAN				EXHAUST FAN				LIGHTS			CONV. OUTLET																		

AIR CONDITIONING UNIT SCHEDULE (INDOOR HEAT PUMP UNIT)

TAG NO.	BASIS OF SELECTION	SERVICE	TYPE	SUPPLY FAN DATA				MIN. OA	COOLING DATA						ELECTRICAL DATA				OPER. WT. (LBS.)	ACCESSORIES
				CFM (HI)	ESP (IN. W.C.)	HP	SPD		CFM	REF. TYPE	EDB/EWB (°F)	LDB/LWB (°F)	TC (MBH)	SC (MBH)	REF. SST (°F)	VOLT	PH	MCA	FLA	
AC-1	MITSUBISHI PCA-A30KA7 (2.5-TON NOMINAL)	ELEC. 014	CEILING SUSPENDED	670	0"	95W	4	0	670	R-410a	75/64	55/54	30.0	21.0	45	208	1	1	0.54	71	REMOTE T`STAT IN LOCKING COVER, DDC INTERFACE LIMITED TO S/S & TEMPERATURE MONITORING, DRAIN PAN LEVEL SENSOR, INTEGRAL CONDENSATE PUMP AS REQUIRED.
AC-2	MITSUBISHI PCA-A30KA7 (2.5-TON NOMINAL)	ELEC. 014	CEILING SUSPENDED	670	0"	95W	4	0	670	R-410a	75/64	55/54	30.0	21.0	45	208	1	1	0.54	71	REMOTE T`STAT IN LOCKING COVER, DDC INTERFACE LIMITED TO S/S & TEMPERATURE MONITORING, DRAIN PAN LEVEL SENSOR, INTEGRAL CONDENSATE PUMP AS REQUIRED.
AC-3	MITSUBISHI PKA-A30KA7 (2.5-TON NOMINAL)	NETWORK 032	HIGH WALL MOUNTED	700	0"	56W	3	0	700	R-410a	75/64	55/54	30.0	21.0	45	208	1	1	0.36	46	REMOTE T`STAT IN LOCKING COVER, DDC INTERFACE LIMITED TO S/S & TEMPERATURE MONITORING, DRAIN PAN LEVEL SENSOR, INTEGRAL CONDENSATE PUMP AS REQUIRED.
AC-4	MITSUBISHI PKA-A30KA7 (2.5-TON NOMINAL)	NETWORK 032	HIGH WALL MOUNTED	700	0"	56W	3	0	700	R-410a	75/64	55/54	30.0	21.0	45	208	1	1	0.36	46	REMOTE T`STAT IN LOCKING COVER, DDC INTERFACE LIMITED TO S/S & TEMPERATURE MONITORING, DRAIN PAN LEVEL SENSOR, INTEGRAL CONDENSATE PUMP AS REQUIRED.
AC-5	MITSUBISHI PKA-A24KA7 (2-TON NOMINAL)	DATA 112	HIGH WALL MOUNTED	700	0"	56W	3	0	700	R-410a	75/64	55/54	24.0	16.8	45	208	1	1	0.36	46	REMOTE T`STAT IN LOCKING COVER, DDC INTERFACE LIMITED TO S/S & TEMPERATURE MONITORING, DRAIN PAN LEVEL SENSOR, INTEGRAL CONDENSATE PUMP AS REQUIRED.
AC-6	MITSUBISHI PKA-A24KA7 (2-TON NOMINAL)	DATA 148D	HIGH WALL MOUNTED	700	0"	56W	3	0	700	R-410a	75/64	55/54	24.0	16.8	45	208	1	1	0.36	46	REMOTE T`STAT IN LOCKING COVER, DDC INTERFACE LIMITED TO S/S & TEMPERATURE MONITORING, DRAIN PAN LEVEL SENSOR, INTEGRAL CONDENSATE PUMP AS REQUIRED.
AC-7	MITSUBISHI PKA-A24KA7 (2-TON NOMINAL)	DATA 248D	HIGH WALL MOUNTED	700	0"	56W	3	0	700	R-410a	75/64	55/54	24.0	16.8	45	208	1	1	0.36	46	REMOTE T`STAT IN LOCKING COVER, DDC INTERFACE LIMITED TO S/S & TEMPERATURE MONITORING, DRAIN PAN LEVEL SENSOR, INTEGRAL CONDENSATE PUMP AS REQUIRED.
AC-8	MITSUBISHI PKA-A12HA7 (1-TON NOMINAL)	ECR 021	HIGH WALL MOUNTED	380	0"	30W	3	0	380	R-410a	75/64	55/54	12.0	8.4	45	208	1	1	0.33	29	REMOTE T`STAT IN LOCKING COVER, DDC INTERFACE LIMITED TO S/S & TEMPERATURE MONITORING, DRAIN PAN LEVEL SENSOR, INTEGRAL CONDENSATE PUMP AS REQUIRED.

NOTES:

1. THIS CONTRACTOR SHALL BE RESPONSIBLE FOR COORDINATING AC UNIT LOCATIONS AND PIPE ROUTING WITH ELECTRICAL CONTRACTOR. UNITS AND PIPING SHALL NOT BE LOCATED ABOVE EQUIPMENT, PANELS OR CABLE TRAYS.

AIR-COOLED CONDENSING UNIT SCHEDULE (OUTDOOR UNIT)

TAG NO.	BASIS OF SELECTION	SERVICE	PERFORMANCE		COMPRESSOR & ELECTRICAL DATA										REQ. MIN. OPER. TEMP. (°F)	OPER. WT. (LBS.)	CONDENSER			ACCESSORIES
			REF. SST (°F)	TC (MBH)	QTY	RLA (EACH)	LRA (EACH)	VOLT	PH	MCA	MOCP	HOT GAS BYPASS	REF. TYPE	REF. CHARGE			FAN	FLA (EACH)	AMB. (°F)	
ACCU-1	MITSUBISHI PUY-A30NHA7 (2.5-TON NOMINAL)	AC-1	45	30.0	1	7.0	11.0	208	1	19.0	26.0	NO	R-410a	7 LBS, 11 OZ	-20	151	1	0.40	95	LOW AMBIENT CONTROLS TO -20°F, WIND GUARDS, CRANKCASE HEATER, 5 YEAR COMPR. WARR., MOUNTED ON MIN.24" HIGH STAND, PIPE AS PER MANUFACTURER'S RECOMMENDATIONS.
ACCU-2	MITSUBISHI PUY-A30NHA7 (2.5-TON NOMINAL)	AC-2	45	30.0	1	7.0	11.0	208	1	19.0	26.0	NO	R-410a	7 LBS, 11 OZ	-20	151	1	0.40	95	LOW AMBIENT CONTROLS TO -20°F, WIND GUARDS, CRANKCASE HEATER, 5 YEAR COMPR. WARR., MOUNTED ON MIN.24" HIGH STAND, PIPE AS PER MANUFACTURER'S RECOMMENDATIONS.
ACCU-3	MITSUBISHI PUY-A30NHA7 (2.5-TON NOMINAL)	AC-3	45	30.0	1	7.0	11.0	208	1	19.0	26.0	NO	R-410a	7 LBS, 11 OZ	-20	151	1	0.40	95	LOW AMBIENT CONTROLS TO -20°F, WIND GUARDS, CRANKCASE HEATER, 5 YEAR COMPR. WARR., MOUNTED ON MIN.24" HIGH STAND, PIPE AS PER MANUFACTURER'S RECOMMENDATIONS.
ACCU-4	MITSUBISHI PUY-A30NHA7 (2.5-TON NOMINAL)	AC-4	45	30.0	1	7.0	11.0	208	1	19.0	26.0	NO	R-410a	7 LBS, 11 OZ	-20	151	1	0.40	95	LOW AMBIENT CONTROLS TO -20°F, WIND GUARDS, CRANKCASE HEATER, 5 YEAR COMPR. WARR., MOUNTED ON MIN.24" HIGH STAND, PIPE AS PER MANUFACTURER'S RECOMMENDATIONS.
ACCU-5	MITSUBISHI PUY-A24NHA7 (2-TON NOMINAL)	AC-5	45	24.0	1	7.0	11.0	208	1	19.0	26.0	NO	R-410a	7 LBS, 11 OZ	-20	151	1	0.40	95	LOW AMBIENT CONTROLS TO -20°F, WIND GUARDS, CRANKCASE HEATER, 5 YEAR COMPR. WARR., MOUNTED ON MIN.24" HIGH STAND, PIPE AS PER MANUFACTURER'S RECOMMENDATIONS.
ACCU-6	MITSUBISHI PUY-A24NHA7 (2-TON NOMINAL)	AC-6	45	24.0	1	7.0	11.0	208	1	19.0	26.0	NO	R-410a	7 LBS, 11 OZ	-20	151	1	0.40	95	LOW AMBIENT CONTROLS TO -20°F, WIND GUARDS, CRANKCASE HEATER, 5 YEAR COMPR. WARR., MOUNTED ON MIN.24" HIGH STAND, PIPE AS PER MANUFACTURER'S RECOMMENDATIONS.
ACCU-7	MITSUBISHI PUY-A24NHA7 (2-TON NOMINAL)	AC-7	45	24.0	1	7.0	11.0	208	1	19.0	26.0	NO	R-410a	7 LBS, 11 OZ	-20	151	1	0.40	95	LOW AMBIENT CONTROLS TO -20°F, WIND GUARDS, CRANKCASE HEATER, 5 YEAR COMPR. WARR., MOUNTED ON MIN.24" HIGH STAND, PIPE AS PER MANUFACTURER'S RECOMMENDATIONS.
ACCU-8	MITSUBISHI PUY-A12NHA7 (1-TON NOMINAL)	AC-8	45	12.0	1	7.0	12.0	208	1	11.0	28.0	NO	R-410a	4 LBS, 7 OZ	-20	92	1	0.50	95	LOW AMBIENT CONTROLS TO -20°F, WIND GUARDS, CRANKCASE HEATER, 5 YEAR COMPR. WARR., MOUNTED ON MIN.24" HIGH STAND, PIPE AS PER MANUFACTURER'S RECOMMENDATIONS.

FAN SCHEDULE

TAG NO.	BASIS OF SELECTION	SERVICE	TYPE	FAN DATA						MOTOR DATA					VFD				REMARKS
				CFM	ESP (in. w.c.)	RPM	BHP	AMCA CLASS	DRIVE	TYPE	HP	RPM	VOLTS	PH	W/ AUTO BYPASS	W/O AUTO BYPASS	BACNET CARD	INTEGRAL DISCONNECT	
KEF-1	COOK QMX202	KITCHEN	IN-LINE MIXED FLOW	7,300	2.0	1,472	3.62	I	BELT	PREM, EFF, INV. DUTY	5	1,725	460	3	•		•	•	WELDED DUCTWORK, ISOLATORS, ACCESS DOOR, MOTOR GUARD, GREASE TROUGH, WALL SWITCH, (SEE NOTE 1), UL-762 RATED, HEAT SHIELD, SHAFT SEAL, ENCLOSED BELT TUNNEL, HIGH TEMP BEARINGS, COPPER LUBLINE, SHAFT GROUNDING RINGS.
EF-1	COOK 165RH16DEC	TOILET EXHAUST	CENTRIF. UPBLAST ROOF VENT	1,300	1.0	1,250	321 W	I	DIRECT	PREM, EFF.	1	1,650	120	1	N/A				ECM MOTOR W/ SPEED CONTROLLER, MOTORIZED BDD, ROOF CURB, RUNS CONTINUOUSLY DURING OCCUPIED HOURS.
EF-2	COOK 150RH17DEC	KILN EXHAUST	CENTRIF. UPBLAST ROOF VENT	800	0.50	1,164	135 W	I	DIRECT	PREM. EFF.	1/2	1,725	120	1	N/A				ECM MOTOR W/ SPEED CONTROLLER, MOTORIZED BDD, ROOF CURB, INTERLOCKED W/ KILN, HEAT SLINGER.
EF-3	COOK GNVF-180	EE	IN-LINE	200	0.25	1,270	47 W	I	DIRECT	PREM. EFF.	47.0 W	1,625	120	1	N/A				BDD, ISOLATORS, RUNS WHEN SPACE TEMP. RISES ABOVE 85°F(ADJ.).
DBF-1	FANTECH DBF 4XLT	DRYER	IN-LINE	160	0.25	-	64.8 W	I	DIRECT	PREM. EFF.	64.8 W	-	120	1	N/A				BDD, ISOLATORS, INTEGRAL PRESSURE SWITCH, MOUNTING CLAMPS AS REQUIRED, LINT TRAP AS REQUIRED.

NOTE:

1. KEF-1 WAS SELECTED BASED ON KITCHEN HOOD IN THE DRAWINGS. ANY CHANGES TO HOOD SHALL REQUIRE COORDINATION OF FAN CAPACITY AND APPROVAL BY ENGINEER.
2. ALL FANS SHALL BE STATICALLY & DYNAMICALLY RE-BALANCED AFTER INSTALLATION.

FIN-TUBE RADIATION SCHEDULE

TAG NO.	BASIS OF SELECTION	ELEMENT DATA										ENCLOSURE DATA				REMARKS
		TIERS	FINS/FT	TUBE SIZE	TUBE MTL	FIN SIZE	FIN MTL	MIN. BTUH/LF	GPM PER LF	FLUID	AWT (°F)	T.D. (°F)	STYLE	MIN GA	HEIGHT (IN.)	DEPTH (IN.)	
FTR-A	RUNTAL R2F-4	4	32	PANEL	STEEL	N/A	STEEL	744	0.15	40% PG	135	10	N/A				PEDESTAL SUPPORTS, FITTING & TRIM AS REQ'D, PERFORATED TOP GRILLE, PIPED TO ASSURE THAT EACH TUBE SEES EQUAL FLOW, EXTRA HEAVY GAUGE CONSTRUCTION, COLOR SELECTION BY ARCHITECT.
FTR-B	STERLING VERSA-LINE BARE ELEMENT "B" MODEL S45	2	50	1"	CU	4-1/4" x 4-1/4"	AL	560	0.11	40% PG	135	10	N/A				MOUNTING BRACKET, TRIM PLATES, BACKING PLATES, PIPED TO ASSURE THAT EACH TUBE SEES EQUAL FLOW, FURNISH AND INSTALL GRILLES IN MILLWORK (SEE ARCHITECTURAL DETAILS FOR QUANTITIES AND SIZES).

RADIANT CEILING PANEL SCHEDULE

TAG NO.	BASIS OF SELECTION	PANEL DATA										REMARKS
		PASSES	TUBE SIZE	PANEL MATERIAL	TUBE MATERIAL	PANEL WIDTH	MIN. BTUH/ LF	FLUID	AWT (°F)	T.D. (°F)	GPM/L F	
RCP-A	AIRTITE AR-X	4	1/2	ALUMINUM	COPPER	24"	218	40% PG	135	10	0.044	LENGTH AS NOTED ON FLOOR PLANS, COLOR SHALL BE CHOSEN BY ARCHITECT, PROVIDE INSULATION AS REQ'D FOR PROPER INSTALLATION, PROVIDE SUPPORTS, FITTINGS & TRIM AS REQ'D.

NOTE:

1. RCP SHALL BE PIPED AS TWO EQUAL FLOW PARALLEL CIRCUITS. EACH CIRCUIT SHALL BE MINIMUM 0.5 GPM PER MANUFACTURERS RECOMMENDATIONS.

PUMP SCHEDULE

TAG NO.	SERVICE	LOCATION	MAKE & MODEL	TYPE	PERFORMANCE DATA						ELECTRICAL DATA		VFD/VSD				REMARKS
					GPM	HEAD (ft.)	RPM	HP	FLUID	FLUID TEMP. (°F)	V/PH/HZ	MOTOR TYPE	W/ AUTO BYPASS	W/O AUTO BYPASS	BACNET CARD	INTEGRAL DISCONNECT	
P-1, 2	BOILER PRIMARY	MECH-015	GRUNDFOS MAGNA3 65-150	IN-LINE CIRCULATOR	93	30	3509	1.86	40% PG	140	208/1/60	ECM		•	•	•	MIN. 175# WP, SHAFT GROUNDING RING IF APPLICABLE, INTEGRATED VFD/VSD
P-3, 4	HOT WATER SECONDARY	MECH-015	GRUNDFOS CRE 45-2	MULTI-STAGE VERTICAL	186	140	3068	15	40% PG	140	460/3/60	ECM		•	•	•	MIN. 175# WP, SHAFT GROUNDING RING IF APPLICABLE, INTEGRATED VFD/VSD
P-5, 6	40°F CHILLED WATER	MECH-015	GRUNDFOS CRE 95-2	MULTI-STAGE VERTICAL	475	160	3197	30	30% PG	44	460/3/60	PREM. EFF.		•	•	•	MIN. 175# WP, SHAFT GROUNDING RING IF APPLICABLE, INTEGRATED VFD/VSD
P-7, 8	55°F CHILLED WATER	MECH-015	GRUNDFOS CRE 45-2-2	MULTI-STAGE VERTICAL	170	120	30334	15	30% PG	55	460/3/60	ECM		•	•	•	MIN. 175# WP, SHAFT GROUNDING RING IF APPLICABLE, INTEGRATED VFD/VSD
FPP-1	MAU-1 FREEZE PROTECTION	CUSTODIAN WORKSHOP-019	GRUNDFOS MAGNA3 40-80	IN-LINE CIRCULATOR	32	15	3359	0.38	40% PG	140	120/1/60	ECM		•	•	•	MIN. 175# WP, SHAFT GROUNDING RING IF APPLICABLE, INTEGRATED VFD/VSD

NOTE:

1. ANY MOTOR WITH VFD SHALL BE PROVIDED WITH SHAFT GROUNDING RINGS.

AIR SEPARATOR SCHEDULE

TAG NO.	BASIS OF SELECTION	SERVICE	LOCATION	FLOW (GPM)	PIPE SIZE (in.)	PRESSURE DROP (ft. wtr.)	
AS-1	SPIROTEHRM SPIROVENT VDN400	HOT WATER SYSTEM	MECH, RM.	186	4"	1'	AIR AND DIRT SEPARATOR WITH ACCESSIBLE STRAINER, HIGH CAPACITY AUTOMATIC AIR VENT.
AS-2	SPIROTEHRM SPIROVENT VDN600	CHILLED WATER SYSTEM	MECH, RM.	452	6"	2'	AIR AND DIRT SEPARATOR WITH ACCESSIBLE STRAINER, HIGH CAPACITY AUTOMATIC AIR VENT.
AS-3	SPIROTEHRM SPIROVENT VDN400	CHILLED WATER SYSTEM	MECH, RM.	110	4"	1'	AIR AND DIRT SEPARATOR WITH ACCESSIBLE STRAINER, HIGH CAPACITY AUTOMATIC AIR VENT.

DIAPHRAGM EXPANSION TANK SCHEDULE

TAG NO.	BASIS OF SELECTION	SERVICE	LOCATION	ASME WP	ACCEPTANCE VOLUME (GALLONS)	DIMENSIONS (in.)		INITIAL TANK AIR CHARGE (PSIG)	REMARKS
						DIAMETER	HEIGHT		
ET-1	TACO CA	SPACE HEATING HOT WATER SYSTEM	MECH. RM.	150	-	__"	__"	30	FIELD REPLACEABLE BLADDER
ET-2	TACO CA	CHILLED WATER SYSTEM	MECH, RM.	150	-	__"	__"	30	FIELD REPLACEABLE BLADDER

GLYCOL FEEDER SCHEDULE

TAG NO.	BASIS OF SELECTION	SERVICE	GALLONS	FLUID	PUMP HP	VOLT	PH	FLA	DIMENSIONS	OPER. WT. (LBS.) (EMPTY)	ACCESSORIES
GFU-1	J.L WINGERT GL50-E1	SPACE HEATING HOT WATER SYSTEM	50	40% PG	1/3	120	1	5.6	2'-9"L x 2'-4"W x 5'-0"H	150	POLYETHYLENE STORAGE TANK WITH HINGED COVER, INTEGRAL PUMP, PUMP CYCLED BY BMS TO MAINTAIN SYSTEM PRESSURE AS SEEN BY AVERAGE VALUE OF SYSTEM PUMP INLET/OUTLET PRESSURE SENSORS.
GFU-2	J.L WINGERT GL50-E1	CHILLED WATER SYSTEM	50	30% PG	1/3	120	1	5.6	2'-9"L x 2'-4"W x 5'-0"H	150	POLYETHYLENE STORAGE TANK WITH HINGED COVER, INTEGRAL PUMP, PUMP CYCLED BY BMS TO MAINTAIN SYSTEM PRESSURE AS SEEN BY AVERAGE VALUE OF SYSTEM PUMP INLET/OUTLET PRESSURE SENSORS.

AMESBURY ELEMENTARY SCHOOL

AMESBURY, MA

DINISCO DESIGN
architects + planners

99 Chauncy Street, Suite 901
Boston, MA 02111
(617) 426-2858

DGT Associates
Surveying & Engineers
1071 Worcester Road
Framingham, MA 01701
(508) 879-0030

Brown Sardina, Inc.
Landscape Architects
24 Roland Street
Boston, MA 02129
(617) 482-4703

Foley Buhl Roberts & Assoc., Inc.
Structural Engineers
2150 Washington Street
Newton, MA 02462
(617) 527-9600

Crabtree McGrath Assoc., Inc.
Food Service Consultants
161 West Main Street
Georgetown, MA 01833
(978) 352-8500

VAV International, Inc.
Mechanical Engineers
400 West Cummings Park S. 4700
Woburn, MA 01801
(781) 935-7228

Thompson Engineering Company, Inc.
Electrical Engineers
89 Newbury Street, Suite 103
Danvers, MA 01923
(617) 866-9066

EdVance Technology Design, Inc.
Technology Consultants
300 Brickstone Square, Suite 201
Andover, MA 01880
(978) 256-9900

KEY PLAN

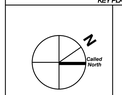

NORTH ARROW *STAMP*

Date: 21 August 2020

Drawn By: JH

Scale: NONE

Revisions

Number	Date	Description

90% COST ESTIMATE SET

HVAC SCHEDULES

9.0.03

© 2020 DiNisco Design

SOUND ATTENUATOR SCHEDULE

TAG NO.	LOCATION	MAKE & MODEL	SERVICE	CFM	VELOCITY (FPM)	MAX Δ PRES. (in. w.c.)	TOTAL UNIT SIZE			DYNAMIC INSERTION LOSS (dB)							REMARKS
							W	H	L	63	125	250	500	1000	2000	4000	8000	
SA-A1-S	ROOF	PRICE	AHU-1 SUPPLY	11,000	-	-	-	-	-	-	-	-	-	-	-	-	-	22 GAUGE GALVANIZED CASING, 22 GAUGE GALVANIZED PERFORATED LINER, GLASS FIBER ACOUSTIC MEDIA, 2" SLIP INLET CONNECTION, 2" SLIP OUTLET CONNECTION.
SA-A1-R	ROOF	PRICE	AHU-1 RETURN	11,000	-	-	-	-	-	-	-	-	-	-	-	-	-	22 GAUGE GALVANIZED CASING, 22 GAUGE GALVANIZED PERFORATED LINER, GLASS FIBER ACOUSTIC MEDIA, 2" SLIP INLET CONNECTION, 2" SLIP OUTLET CONNECTION.
SA-A2-S	ROOF	PRICE	AHU-2 SUPPLY	10,000	-	-	-	-	-	-	-	-	-	-	-	-	-	22 GAUGE GALVANIZED CASING, 22 GAUGE GALVANIZED PERFORATED LINER, GLASS FIBER ACOUSTIC MEDIA, 2" SLIP INLET CONNECTION, 2" SLIP OUTLET CONNECTION.
SA-A2-R	ROOF	PRICE	AHU-2 RETURN	10,000	-	-	-	-	-	-	-	-	-	-	-	-	-	22 GAUGE GALVANIZED CASING, 22 GAUGE GALVANIZED PERFORATED LINER, GLASS FIBER ACOUSTIC MEDIA, 2" SLIP INLET CONNECTION, 2" SLIP OUTLET CONNECTION.
SA-A3-S	ROOF	PRICE	AHU-3 SUPPLY	6,000	-	-	-	-	-	-	-	-	-	-	-	-	-	22 GAUGE GALVANIZED CASING, 22 GAUGE GALVANIZED PERFORATED LINER, GLASS FIBER ACOUSTIC MEDIA, 2" SLIP INLET CONNECTION, 2" SLIP OUTLET CONNECTION.
SA-A3-R	ROOF	PRICE	AHU-3 RETURN	6,000	-	-	-	-	-	-	-	-	-	-	-	-	-	22 GAUGE GALVANIZED CASING, 22 GAUGE GALVANIZED PERFORATED LINER, GLASS FIBER ACOUSTIC MEDIA, 2" SLIP INLET CONNECTION, 2" SLIP OUTLET CONNECTION.
SA-E1-S	ROOF	PRICE	ERU-1 SUPPLY	12,000	-	-	-	-	-	-	-	-	-	-	-	-	-	22 GAUGE GALVANIZED CASING, 22 GAUGE GALVANIZED PERFORATED LINER, GLASS FIBER ACOUSTIC MEDIA, 2" SLIP INLET CONNECTION, 2" SLIP OUTLET CONNECTION.
SA-E1-R	ROOF	PRICE	ERU-1 RETURN	12,000	-	-	-	-	-	-	-	-	-	-	-	-	-	22 GAUGE GALVANIZED CASING, 22 GAUGE GALVANIZED PERFORATED LINER, GLASS FIBER ACOUSTIC MEDIA, 2" SLIP INLET CONNECTION, 2" SLIP OUTLET CONNECTION.
SA-E2-S	ROOF	PRICE	ERU-2 SUPPLY	12,000	-	-	-	-	-	-	-	-	-	-	-	-	-	22 GAUGE GALVANIZED CASING, 22 GAUGE GALVANIZED PERFORATED LINER, GLASS FIBER ACOUSTIC MEDIA, 2" SLIP INLET CONNECTION, 2" SLIP OUTLET CONNECTION.
SA-E2-R	ROOF	PRICE	ERU-2 RETURN	12,000	-	-	-	-	-	-	-	-	-	-	-	-	-	22 GAUGE GALVANIZED CASING, 22 GAUGE GALVANIZED PERFORATED LINER, GLASS FIBER ACOUSTIC MEDIA, 2" SLIP INLET CONNECTION, 2" SLIP OUTLET CONNECTION.
SA-R1-S	ROOF	PRICE	RTU-1 SUPPLY	4,000	-	-	-	-	-	-	-	-	-	-	-	-	-	22 GAUGE GALVANIZED CASING, 22 GAUGE GALVANIZED PERFORATED LINER, GLASS FIBER ACOUSTIC MEDIA, 2" SLIP INLET CONNECTION, 2" SLIP OUTLET CONNECTION.
SA-R1-R	ROOF	PRICE	RTU-2 RETURN	4,000	-	-	-	-	-	-	-	-	-	-	-	-	-	22 GAUGE GALVANIZED CASING, 22 GAUGE GALVANIZED PERFORATED LINER, GLASS FIBER ACOUSTIC MEDIA, 2" SLIP INLET CONNECTION, 2" SLIP OUTLET CONNECTION.
SA-M1-S	TBD	PRICE	MAU-1 SUPPLY	4,200	-	-	-	-	-	-	-	-	-	-	-	-	-	22 GAUGE GALVANIZED CASING, 22 GAUGE GALVANIZED PERFORATED LINER, GLASS FIBER ACOUSTIC MEDIA, 2" SLIP INLET CONNECTION, 2" SLIP OUTLET CONNECTION.

VARIABLE AIR VOLUME TERMINAL BOX SCHEDULE

TAG NO.	MAKE & MODEL	UNIT SIZE	INLET SIZE	CASING HEIGHT (IN)	CASING WIDTH (IN)	AIRFLOW DATA				HOT WATER COIL DATA											SILENCER ***							ACCESSORIES
						MAX. CFM *	MIN. CFM	ASSEMBLY PD **	CONTROL TYPE	MAX APD.	CFM	EAT (°F)	LAT (°F)	CAP (MBH)	EWT (°F)	LWT (°F)	GPM	FLUID	ROWS	WPD (FT. WTR.)	FV (FPM)	MAX DISCHARGE SOUND POWER LEVELS						
																						63	125	250	500	1000	2000	
VAV-4-1	PRICE SDVQ5	4	4"	8	12	90	25	0.01	PRESSURE INDEPEND. DDC CONTROLS	N/A											60	60	54	46	43	32	35	DDC, ADJUSTABLE ROOM SENSOR, FLOW SENSOR (CFM), PRESSURE INDEP., BACNET OPEN PROTOCOL, FIBER FREE FOAM INSULATION
VAV-4-2	PRICE SDVQ5	4	4"	8	12	115	30	0.01	PRESSURE INDEPEND. DDC CONTROLS	N/A											173	64	58	50	47	35	38	DDC, ADJUSTABLE ROOM SENSOR, FLOW SENSOR (CFM), PRESSURE INDEP., BACNET OPEN PROTOCOL, FIBER FREE FOAM INSULATION
VAV-6-1	PRICE SDVQ5	8	6"	10	12	300	75	0.15	PRESSURE INDEPEND. DDC CONTROLS	0.14	150	55	95	6.6	140	99.4	0.33	40% PG	2 HC	0.03	360	67	59	53	50	36	38	DDC, ADJUSTABLE ROOM SENSOR, FLOW SENSOR (CFM), PRESSURE INDEP., BACNET OPEN PROTOCOL, FIBER FREE FOAM INSULATION, OVERSIZED CASING
VAV-6-2	PRICE SDVQ5	8	6"	10	12	300	75	0.15	PRESSURE INDEPEND. DDC CONTROLS	0.14	150	55	95	6.6	140	99.4	0.33	40% PG	2 HC	0.03	360	67	59	53	50	36	38	DDC, ADJUSTABLE ROOM SENSOR, FLOW SENSOR (CFM), PRESSURE INDEP., BACNET OPEN PROTOCOL, FIBER FREE FOAM INSULATION, OVERSIZED CASING
VAV-6-3	PRICE SDVQ5	8	6"	10	12	300	75	0.15	PRESSURE INDEPEND. DDC CONTROLS	0.14	150	55	95	6.6	140	99.4	0.33	40% PG	2 HC	0.03	360	67	59	53	50	36	38	DDC, ADJUSTABLE ROOM SENSOR, FLOW SENSOR (CFM), PRESSURE INDEP., BACNET OPEN PROTOCOL, FIBER FREE FOAM INSULATION, OVERSIZED CASING
VAV-8-1	PRICE SDVQ5	10	8"	12.5	14	600	150	0.25	PRESSURE INDEPEND. DDC CONTROLS	0.24	350	55	95	15.2	140	105.2	0.88	40% PG	2 HC	0.20	494	64	54	49	48	35	36	DDC, ADJUSTABLE ROOM SENSOR, FLOW SENSOR (CFM), PRESSURE INDEP., BACNET OPEN PROTOCOL, FIBER FREE FOAM INSULATION, OVERSIZED CASING
VAV-8-2	PRICE SDVQ5	10	8"	12.5	14	600	150	0.25	PRESSURE INDEPEND. DDC CONTROLS	0.24	350	55	95	15.2	140	105.2	0.88	40% PG	2 HC	0.20	494	64	54	49	48	35	36	DDC, ADJUSTABLE ROOM SENSOR, FLOW SENSOR (CFM), PRESSURE INDEP., BACNET OPEN PROTOCOL, FIBER FREE FOAM INSULATION, OVERSIZED CASING
VAV-8-3	PRICE SDVQ5	10	8"	12.5	14	600	150	0.25	PRESSURE INDEPEND. DDC CONTROLS	0.24	350	55	95	15.2	140	105.2	0.88	40% PG	2 HC	0.20	494	64	54	49	48	35	36	DDC, ADJUSTABLE ROOM SENSOR, FLOW SENSOR (CFM), PRESSURE INDEP., BACNET OPEN PROTOCOL, FIBER FREE FOAM INSULATION, OVERSIZED CASING
VAV-10-1	PRICE SDVQ5	12	10"	15	16	1,000	250	0.34	PRESSURE INDEPEND. DDC CONTROLS	0.33	500	55	95	21.7	140	105.5	1.27	40% PG	2 HC	0.47	600	60	49	47	48	35	36	DDC, ADJUSTABLE ROOM SENSOR, FLOW SENSOR (CFM), PRESSURE INDEP., BACNET OPEN PROTOCOL, FIBER FREE FOAM INSULATION, OVERSIZED CASING
VAV-10-2	PRICE SDVQ5	12	10"	15	16	800	200	0.24	PRESSURE INDEPEND. DDC CONTROLS	0.23	400	55	95	17.5	140	102.4	0.94	40% PG	2 HC	0.27	480	60	50	47	47	35	37	DDC, ADJUSTABLE ROOM SENSOR, FLOW SENSOR (CFM), PRESSURE INDEP., BACNET OPEN PROTOCOL, FIBER FREE FOAM INSULATION, OVERSIZED CASING
VAV-10-3	PRICE SDVQ5	10	10"	12.5	14	840	210	0.01	PRESSURE INDEPEND. DDC CONTROLS	N/A											692	67	59	52	51	45	44	DDC, ADJUSTABLE ROOM SENSOR, FLOW SENSOR (CFM), PRESSURE INDEP., BACNET OPEN PROTOCOL, FIBER FREE FOAM INSULATION

NOTES:

* REFER TO PLANS FOR ACTUAL MAX. CFM.
** TOTAL VAV BOX & HWC APD AT FULL AIR FLOW. APD SHALL BE LIMITED TO MAX. 0.5" w.c. ACROSS ENTIRE ASSEMBLY.
*** SILENCER SHALL BE PROVIDED AS AN INTEGRAL PART OF THE VAV BOX BY VAV BOX MANUFACTURER.

ELECTRIC WALL HEATER SCHEDULE

TAG NO.	BASIS OF SELECTION	SERVICE	CAPACITY (kW)	CFM	AMPS	VOLTS	PH	WEIGHT (LBS.)	REMARKS
EWH-500 W	INDEECO WRI SERIES 930U	SEE PLANS	0.5	40	4.6	120	1	9	18 GA. CABINET, ALUMINUM TAMPER PROOF GRILLE, BAKED ENAMEL FINISH, RECESSED INSTALLATION, COLOR BY ARCHITECT, CONTROLLED BY BMS (NOT INTEGRAL T'STAT), REMOTE SPACE SENSOR (BY ATC).
EWH-750 W	INDEECO WRI SERIES 930U	SEE PLANS	0.75	40	6.7	120	1	9	18 GA. CABINET, ALUMINUM TAMPER PROOF GRILLE, BAKED ENAMEL FINISH, RECESSED INSTALLATION, COLOR BY ARCHITECT, CONTROLLED BY BMS (NOT INTEGRAL T'STAT), REMOTE SPACE SENSOR (BY ATC).
EWH-1.5 kW	INDEECO WAI SERIES 933U	SEE PLANS	1.5	160	12.9	120	1	24	18 GA. CABINET, ALUMINUM TAMPER PROOF GRILLE, BAKED ENAMEL FINISH, RECESSED INSTALLATION, COLOR BY ARCHITECT, CONTROLLED BY BMS (NOT INTEGRAL T'STAT), REMOTE SPACE SENSOR (BY ATC).
EWH-4 kW	INDEECO WAI SERIES 933U	SEE PLANS	4	160	5.22	460	3	28	18 GA. CABINET, ALUMINUM TAMPER PROOF GRILLE, BAKED ENAMEL FINISH, RECESSED INSTALLATION, COLOR BY ARCHITECT, CONTROLLED BY BMS (NOT INTEGRAL T'STAT), REMOTE SPACE SENSOR (BY ATC).

ELECTRIC UNIT HEATER SCHEDULE

TAG NO.	BASIS OF SELECTION	SERVICE	CAPACITY (kW)	CFM	THROW	MCA	MOCP	VOLTS	PH	DIMENSIONS	WEIGHT (LBS.)	REMARKS
EUH-3kW	BERKO HUHAA 348	SEE PLANS	3	350	12	3.6	-	460	3	16"H x 14"W x 8-1/2"D	24	NON-FUSED DISCONNECT SWITCH, MOUNTING BRACKETS, COLOR BY ARCHITECT, CONTROLLED BY BMS (NOT INTEGRAL T'STAT), REMOTE SPACE SENSOR (BY ATC).

DUCT INSULATION SCHEDULE

LOCATION	SUPPLY	RETURN	RAW OUTDOOR AIR	EXHAUST		REMARKS
				WITH ENERGY RECOVERY	WITHOUT ENERGY RECOVERY	
ATTIC TYPE SPACE	R-8	R-8	R-6	R-8	R-6 *	
OUTDOORS	R-12	R-12	NONE	R-12	R-12 *	
UNCONDITIONED SPACE (SHAFT OR CEILING WITH DUCTED RETURN AIR)	R-6	R-6	R-6	R-6	R-6	
EXPOSED IN MER	R-6	R-6	R-6	R-6	R-6	
EXPOSED IN SPACE SERVED	NONE	NONE	R-6	NONE	NONE	
KITCHEN EXHUAST	N/A	N/A	N/A	N/A	2-LAYERS OF FIRE WRAP	

NOTES:

1. R-VALUE SHOWN MAY BE OBTAINED BY ADDING THE R-VALUES OF BOTH THE LINING (WHERE SHOWN OR USED) AND EXTERNAL DUCT INSULATION.
2. REFER TO SPECIFICATIONS FOR ADDITIONAL INFORMATION AND EXCEPTIONS.
3. NO INSULATION REQUIRED ON RETURN AIR DUCTWORK DROPS WITHIN CLASSROOM CHASES.

DUCT LINING: ACOUSTIC DUCT LINING OF THE TYPE AND THICKNESS SPECIFIED SHALL B INSTALLED ON ALL SUPPLY, RETURN, AND EXHAUST DUCTWORK WITHIN 20 FEET OF AIR HANDLING UNITS AND FANS (INCLUDING BRANCHES), AND WHERE DETAILED OR SHOWN ON DRAWINGS. LINING SHALL NOT BE USED ON KITCHEN DUCTWORK AND WET/HUMID EXHAUST SUCH AS DISHWASHER AND CLOTHES DRYERS.

* R-VALUE SHOWN IS ONLY IF AREA OF BUILDING BEING EXHAUSTED IS HUMIDIFIED. IF NOT HUMIDIFIED, NO INSULATION UNLESS FIRE WRAP OR LINING IS NEEDED.

PIPE INSULATION SCHEDULE

FLUID OPERATING TEMPERATURE AND USAGE (°F)	INSULATION CONDUCTIVITY		NOMINAL PIPE OR TUBE SIZE (in.)					REMARKS
	CONDUCTIVITY (BTU/in/(h·ft²·°F))	MEAN RATING TEMPERATURE (°F)	<1"	1" to <1.5"	1.5" to <4"	4" to <8"	≥8"	
>350	0.32-0.34	250	4.5	5.0	5.0	5.0	5.0	
251-350	0.29-0.32	200	3.0	4.0	4.5	4.5	4.5	
201-250	0.27-0.30	150	2.5	2.5	2.5	3.0	3.0	
141-200	0.25-0.29	125	1.5	1.5	2.0	2.0	2.0	
105-140	0.21-0.28	100	1.0	1.0	1.5	1.5	1.5	
61-104	---------- N/A ----------							
40-60	0.21-0.27	75	0.5	0.5	1.0	1.0	1.0	
<40	0.20-0.26	75	0.5	1.0	1.0	1.0	1.5	

NOTES:

1. FOR PIPING SMALLER THAN 1-1/2" AND LOCATED IN PARTITIONS WITHING CONDITIONED SPACES, REDUCTION OF THESE THICKNESSES BY 1" SHALL BE PERMITTED (BEFORE THICKNESS ADJUSTMENT REQUIRED IN NOTE (2) BUT NOT TO A THICKNESS LESS THAN 1".

2. FOR INSULATION OUTSIDE THE STATED CONDUCTIVITY RANGE, THE MINIMUM THICKNESS (T) SHALL BE DETERMINED AS FOLLOWS:
   T = r((1+t/r)K/k-1)
   WHERE:
   T = MINIMUM INSULATION THICKNESS,
   r = ACTUAL OUTSIDE RADIUS OF PIPE,
   t = INSULATION THICKNESS LISTED IN THE TABLE FOR APPLICABLE FLUID TEMPERATURE AND PIPE SIZE,
   K = CONDUCTIVITY OF ALTERNATE MATERIAL AT MEAN RATING TEMPERATURE INDICATED FOR THE APPLICABLE FLUID (BTU * IN/H * FT^2 * °F) AND
   k = THE UPPER VALUE OF THE CONDUCTIVITY RANGE LISTED IN THE TABLE FOR THE APPLICABLE FLUID TEMPERATURE

3. FOR DIRECT-BURIED HEATING AND HOT WATER SYSTEM PIPING, REDUCTION OF THESE THICKNESSES BY 1-1/2" SHALL BE PERMITTED (BEFORE THICKNESS ADJUSTEMNT REQUIRED IN NOTE (2) BUT NOT TO THICKNESSES LESS THAN 1".

AMESBURY ELEMENTARY SCHOOL

AMESBURY, MA

DINISCO DESIGN
architects + planners
99 Chauncy Street, Suite 901
Boston, MA 02111
(617) 426-2858

DGT Associates
Surveying & Engineers
1071 Worcester Road
Framingham, MA 01701
(508) 879-0030

Brown Sardina, Inc.
Landscape Architects
24 Roland Street
Boston, MA 02129
(617) 482-4703

Foley Buhl Roberts & Assoc., Inc.
Structural Engineers
2150 Washington Street
Newton, MA 02462
(617) 527-9600

Crabtree McGrath Assoc., Inc.
Food Service Consultants
161 West Main Street
Georgetown, MA 01833
(978) 352-8500

VAV International, Inc.
Mechanical Engineers
400 West Cummings Park S. 4700
Woburn, MA 01801
(781) 935-7228

Thompson Engineering Company, Inc.
Electrical Engineers
89 Newbury Street, Suite 103
Danvers, MA 01923
(617) 866-9066

EdVance Technology Design, Inc.
Technology Consultants
300 Brickstone Square, Suite 201
Andover, MA 01880
(978) 256-9900

KEY PLAN



NORTH ARROW *STAMP*

Date: 21 August 2020

Drawn By: JH

Scale: NONE

Revisions

Number	Date	Description

90% COST ESTIMATE SET

HVAC SCHEDULES

9.0.04

© 2020 DiNisco Design

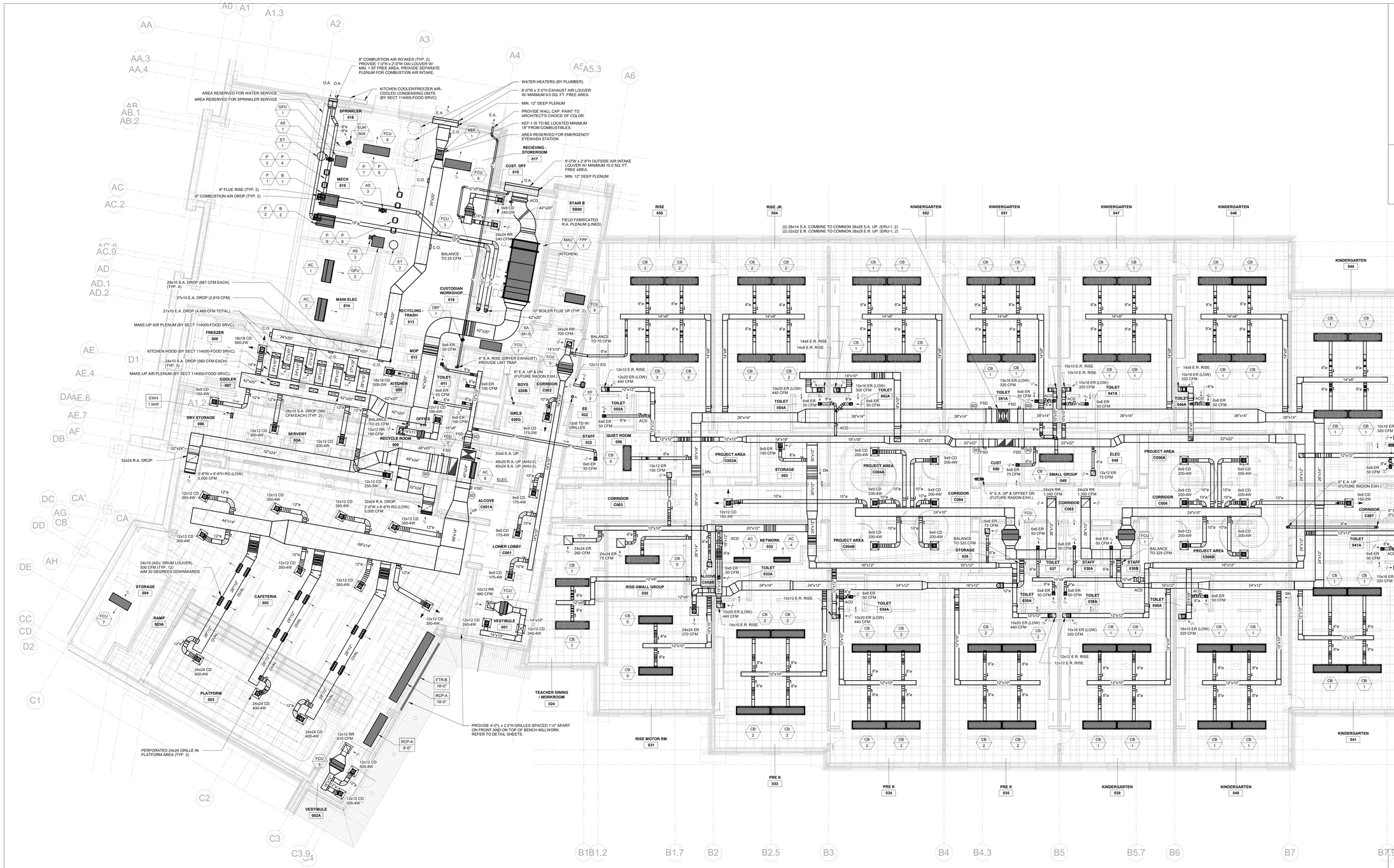

AMESBURY ELEMENTARY SCHOOL

AMESBURY, MA

DINISCO DESIGN
architects + planners
99 Chauncy Street Suite 901
Boston MA 02111
(617) 426 2858

NORTH ARROW

STAMP

Date 21 August 2020

Drawn By JH

Scale 1/8" = 1'-0"

Revisions

Number	Date	Description

90% COST ESTIMATE SET

GROUND FLOOR DUCTWORK PLAN

9.4.01

© 2020 DiNisco Design

AMESBURY ELEMENTARY SCHOOL

AMESBURY, MA

DINISCO DESIGN
architects + planners
99 Chauncy Street Suite 901
Boston MA 02111
(617) 426 2858

GYMNASIUM 114
PE OFFICE 115
STAIR B SB01
GYM STORAGE 116
CUST 117
GYM CORRIDOR C102A
BOYS 120B
GIRLS 120G
CORRIDOR C102
STAIR A SA01
MAIN LOBBY C101
VEST 101
GENERAL OFFICE 103
PRINCIPAL 104
OFFICE 105
CONFERENCE ROOM 106
CORRIDOR C113
MAIL-DUPLICATE RECORDS 102
TOILET 111
TOILET 109
ALCOVE C101A
DATA 112
CORRIDOR C113
CLOSET 108A 108
KITCHENETTE 108
NURSE OFFICE 107A
NURSE 107
NURSE TOILET 107B
SW/GUID 107B
PRACTICE 124
PRACTICE 130A
MUSIC 130
SPED CONF 161
SPED FACIL 160
BCBA 159
PT 155
CORRIDOR C110
OT/PT STRG 154
QT 153
CORRIDOR C103
TOILET 133A
STAFF 133
PSYCH 150
ADJ COUN 157
CLASSROOM 152
CLASSROOM 151
LITERACY LIBRARY 147
CLASSROOM 146
STORAGE 156
PROJECT AREA C104A
CORRIDOR C104
STAFF 150
SLP 149
ELEC 148E
PROJECT AREA C104B
GIRLS 136G
BOYS 136B
CORRIDOR C105
TOILET 137
QUIET ROOM 138
CORRIDOR C106
PROJECT AREA C106A
PROJECT AREA C106B
STUDENT SUPPORT 145
RESOURCE ROOM 144
DATA 148D
CORRIDOR C107
CUST 142
SMALL GROUP 143
STAIR C SC01
ISN 131
CLASSROOM 134
CLASSROOM 135
CUBS 139
CLASSROOM 140
CLASSROOM 141

OPEN TO ABOVE
10" BOILER FLUE DN (TYP. 2).
20x6 E.A. UP & DN.
40x24 R.A. UP & OFFSET DN (AHU-2).
40x24 S.A. UP & DN (AHU-2).
6" E.A. UP & DN (FUTURE RADON EXH.)
ELEV.
40x14 R.A. UP (RTU-1).
40x14 S.A. UP (RTU-1).
16x12 R.A. DROP.
10x6 E.A. UP.
FTR-B 14'-0"
BALANCE TO 70 CFM.
BALANCE TO 420 CFM.
4'-0" LSD 200 CFM
4'-0" LSD 300 CFM

NORTH ARROW STAMP

Date 21 August 2020
Drawn By JH
Scale 1/8" = 1'-0"

Revisions

Number	Date	Descnption

90% COST ESTIMATE SET

FIRST FLOOR DUCTWORK PLAN

9.4.02

© 2020 DiNisco Design

AMESBURY ELEMENTARY SCHOOL

AMESBURY, MA

DINISCO DESIGN
architects + planners
99 Chauncy Street Suite 901
Boston MA 02111
(617) 426 2858

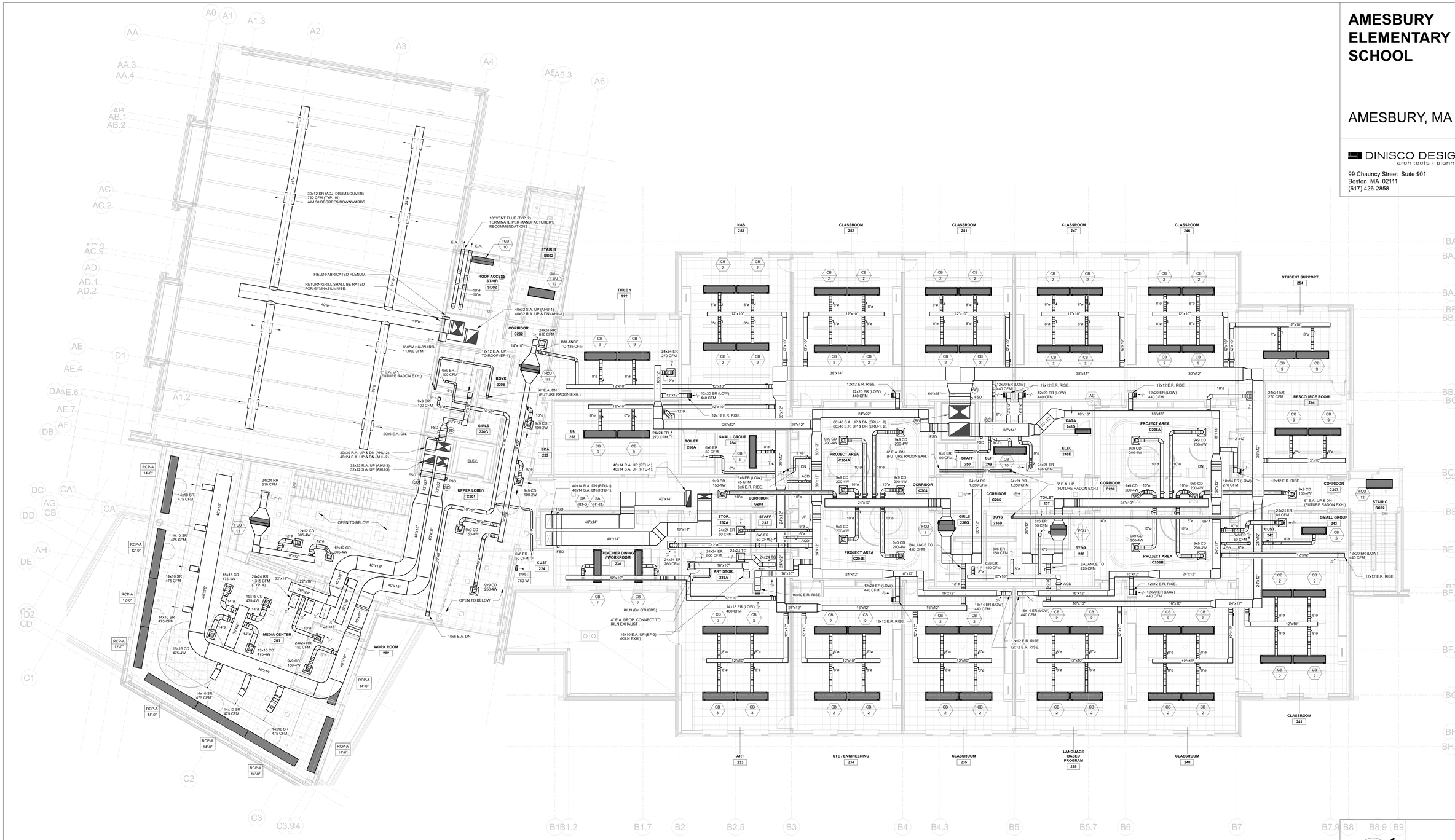

NORTH ARROW
STAMP

Date	21 August 2020
Drawn By	JH
Scale	1/8" = 1'-0"

Revisions

Number	Date	Descnption

90% COST ESTIMATE SET

SECOND FLOOR DUCTWORK PLAN

9.4.03

© 2020 DiNisco Design

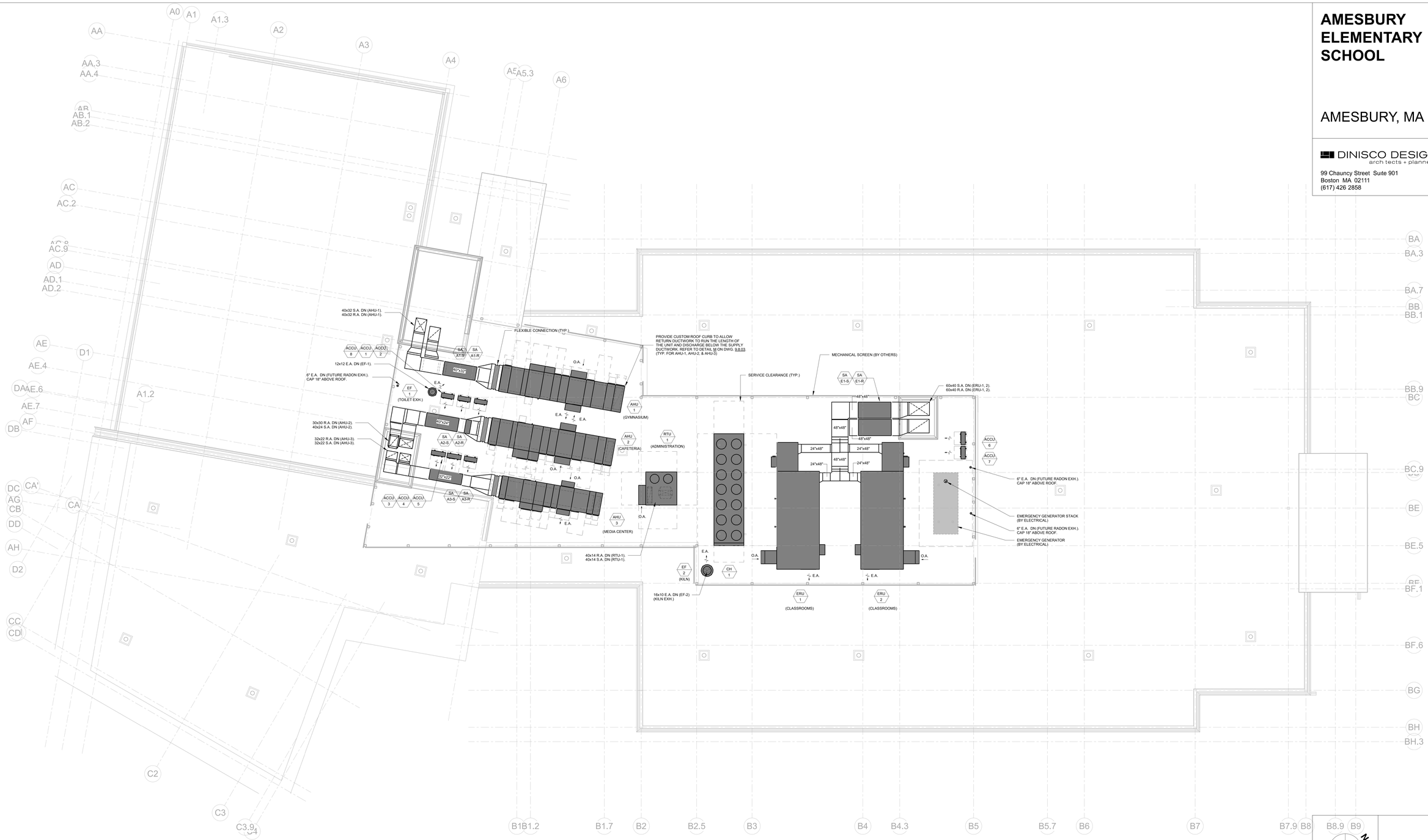

AMESBURY ELEMENTARY SCHOOL

AMESBURY, MA

DINISCO DESIGN
architects + planners
99 Chauncy Street Suite 901
Boston MA 02111
(617) 426 2858

NORTH ARROW

STAMP

Date 21 August 2020

Drawn By JH

Scale 1/8" = 1'-0"

Revisions

Number	Date	Descnption

90% COST ESTIMATE SET

ROOF LEVEL DUCTWORK PLAN

9.4.04

© 2020 DiNisco Design

AMESBURY ELEMENTARY SCHOOL

AMESBURY, MA

DINISCO DESIGN
architects + planners
99 Chauncy Street Suite 901
Boston MA 02111
(617) 426 2858

REFER TO ENLARGED MECHANICAL ROOM PIPING PLAN ON DRAWING 9.6.01. REFER TO HOT & CHILLED WATER DIAGRAMS FOR DETAILS OF VALVES AND CONNECTIONS.

AREA RESERVED FOR WATER SERVICE

AREA RESERVED FOR SPRINKLER SERVICE

WATER HEATERS (BY PLUMBER)

AREA RESERVED FOR EMERGENCY EYEWASH STATION

4" HWS DROP TO PUMPS (TYP. 4).

(ON DROP)

3" HWS/R DROP (B-1).

(ON DROP)

3" HWS/R DROP (B-2).

RUN REFRIG. PIPING UP TO HEAT PUMP ON ROOF.

PROVIDE GALVANIZED STEEL SECONDARY DRAIN PAN WITH 2"H LIP BELOW CONDENSATE DRAIN PIPING IN THE MAIN ELECTRICAL ROOM 014.

RUN REFRIG. PIPING UP TO HEAT PUMP ON ROOF.

6" CHWS (55F) DROP TO PUMPS P-7, 8 (TYP. 4)

6" CHWS (42F) DROP TO PUMPS P-5, 6 (TYP. 4)

6" CHWR (54°F) UP (EXPRESS RISER).
4" CHWS (42°F) UP.
4" CHWR (54°F) UP.
3" CHWS (55°F) UP.
3" CHWR (60°F) UP.
3" HWS UP.
3" HWR UP.

1" COND. DRAIN UP.

(2) 1" COND. DRAIN SPILL TO JANITOR SINK

1" COND. DRAIN UP.

REFRIG. PIPING DROP (1 SET)

CONNECT 1" COND. DRAIN TO HUB DRAIN PROVIDED BY PLUMBER

1" COND. DRAIN UP.

CONNECT 1-1/4" COND. DRAIN TO HUB DRAIN PROVIDED BY PLUMBER

1" HWR UP.
1" HWS UP.
CHWS (54F) UP.
CHWR (42F) UP.

1" HWR DROP.
1" HWS DROP.

1" HWR & HWS RUN UNDER BENCH TO FTR.

REFRIG. PIPING UP. (2 SETS)

1" HWS/R DROP.
1-1/4" COND. RAIN UP.

RUN PIPING IN FURRED WALL

PIPE GUIDE (TYP.) LOCATE PER EXPANSION COMPENSATOR MFG'S RECOMMENDATIONS.

FLEXIBLE PIPE TYPE EXPANSION COMPENSATOR (TYP.)

PIPE ANCHOR (TYP.)

CONNECT 1" COND. DRAIN TO HUB DRAIN PROVIDED BY PLUMBER

1" COND. DRAIN UP.

CONNECT 1" COND. DRAIN TO HUB DRAIN PROVIDED BY PLUMBER

CONNECT 1-1/4" COND. DRAIN TO HUB DRAIN PROVIDED BY PLUMBER

1" COND. DRAIN UP.

CONNECT 1

AMESBURY ELEMENTARY SCHOOL

AMESBURY, MA

DINISCO DESIGN
architects + planners
99 Chauncy Street Suite 901
Boston MA 02111
(617) 426 2858

GYMNASIUM 114
PE OFFICE 115
STAIR B SB01
GYM STORAGE 116
CUST 117
GYM CORRIDOR C102A
BOYS 120B
GIRLS 120G
CORRIDOR C102
ELEV.
STAIR A SA01
VEST 101
GENERAL OFFICE 103
MAIN LOBBY C101
MAIL-DUPLICATE-RECORDS 102
PRINCIPAL 104
CORRIDOR C113
TOILET 111
ALCOVE C101A
DATA 112
TOILET 109
CORRIDOR C113
OFFICE 105
CONFERENCE ROOM 106
CLOSET 108A 108
NURSE OFFICE 107A
KITCHENETTE 108
NURSE 107
SW/GUID 107B
NURSE TOILET 107B
PSYCH 158
ADJ COUN 157
CLASSROOM 152
CLASSROOM 151
LITERACY LIBRARY 147
CLASSROOM 146
STUDENT SUPPORT 145
SPED CONF 161
SPED FACIL 160
BCBA 159
CORRIDOR C110
STORAGE 156
PT 155
OT/PT STRG 154
QT 153
PROJECT AREA C104A
STAFF 150
SLP 149
DATA 148D
ELEC 148E
PROJECT AREA C106A
RESOURCE ROOM 144
PRACTICE 124
CORRIDOR C103
TOILET 133A
STAFF 133
CORRIDOR C104
PROJECT AREA C104B
CORRIDOR C105
GIRLS 136G
BOYS 136B
TOILET 137
QUIET ROOM 138
PROJECT AREA C106B
CORRIDOR C106
SMALL GROUP 143
CUST 142
STAIR C SC01
PRACTICE 130A
MUSIC 130
ISN 131
CLASSROOM 134
CLASSROOM 135
CUBS 139
CLASSROOM 140
CLASSROOM 141

6" CHWR (54°F) UP & DN (EXPRESS RISER).
4" CHWS (42°F) UP & DN.
4" CHWR (54°F) UP & DN.
3" CHWS (55°F) UP & DN.
3" CHWR (60°F) UP & DN.
3" HWS UP & DN.
3" HWR UP & DN.

1" COND. DRAIN DN.
REFRIG. PIPING UP (3 SETS)
REFRIG. PIPING DN. (2 SETS)
REFRIG. PIPING DROP. (1 SET)
REFRIG. PIPING UP (1 SET).
REFRIG. PIPING DROP (1 SET).
1" COND. DRAIN UP.
1-1/4" COND. DRAIN UP & DN.
1" HWR UP.
1" HWS UP.
1" CHWR (50°F) UP.
1" CHWS (44°F) UP.
1" COND. DRAIN UP & DN.
2" HWS UP.
2" HWR UP.
* CHWR DN.
* CHWS DN.
* HWS DN.
* HWR DN.
* CHWR (54F) DN.
* CHWS (42F) DN.
* HWS UP & DN.
* HWR UP & DN.

PIPE GUIDE (TYP.) LOCATE PER EXPANSION COMPENSATOR MFG'S RECOMMENDATIONS.
FLEXIBLE PIPE TYPE EXPANSION COMPENSATOR (TYP.)
PIPE ANCHOR (TYP.)

FTR-B 16'-0"

Scaled North

NORTH ARROW | STAMP

Date 21 August 2020
Drawn By JH
Scale 1/8" = 1'-0"

Revisions

Number	Date	Descnption

90% COST ESTIMATE SET

FIRST FLOOR PIPING PLAN

9.5.02

1 9.5.02 - First Floor - PIPING
1/8" = 1'-0"

© 2020 DiNisco Design

AMESBURY ELEMENTARY SCHOOL

AMESBURY, MA

DINISCO DESIGN
architects + planners
99 Chauncy Street Suite 901
Boston MA 02111
(617) 426 2858



Date 21 August 2020

Drawn By JH

Scale 1/8" = 1'-0"

Revisions

Number	Date	Descnption

90% COST ESTIMATE SET

SECOND FLOOR PIPING PLAN

9.5.03

© 2020 DiNisco Design

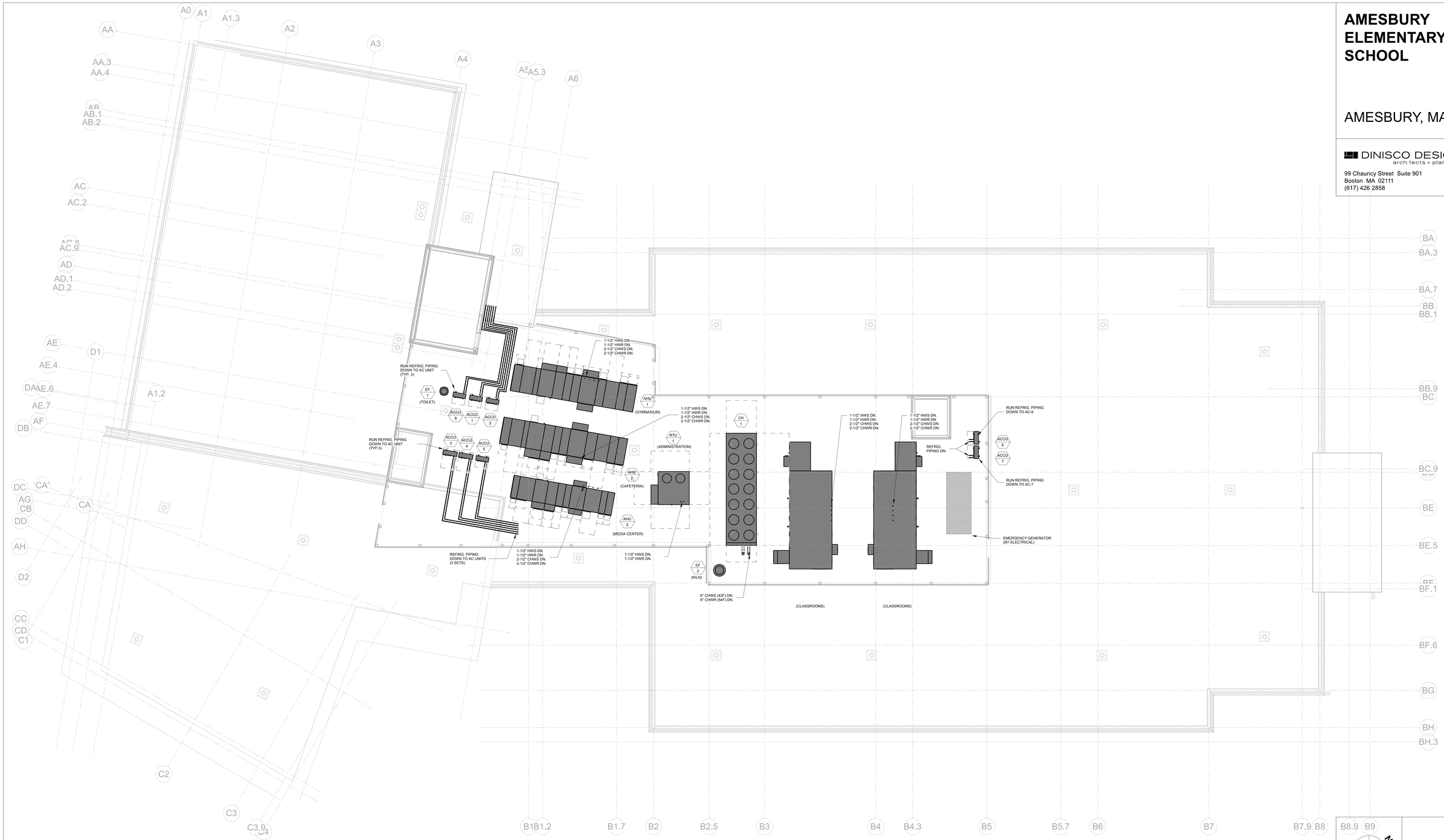

AMESBURY ELEMENTARY SCHOOL

AMESBURY, MA

DINISCO DESIGN
architects + planners
99 Chauncy Street Suite 901
Boston MA 02111
(617) 426 2858

NORTH ARROW (Called North)

STAMP

Date 21 August 2020

Drawn By JH

Scale 1/8" = 1'-0"

Revisions

Number	Date	Descnption

90% COST ESTIMATE SET

ROOF LEVEL PIPING PLAN

9.5.04

© 2020 DiNisco Design

AMESBURY ELEMENTARY SCHOOL

AMESBURY, MA

DINISCO DESIGN
architects + planners
99 Chauncy Street Suite 901
Boston MA 02111
(617) 426 2858

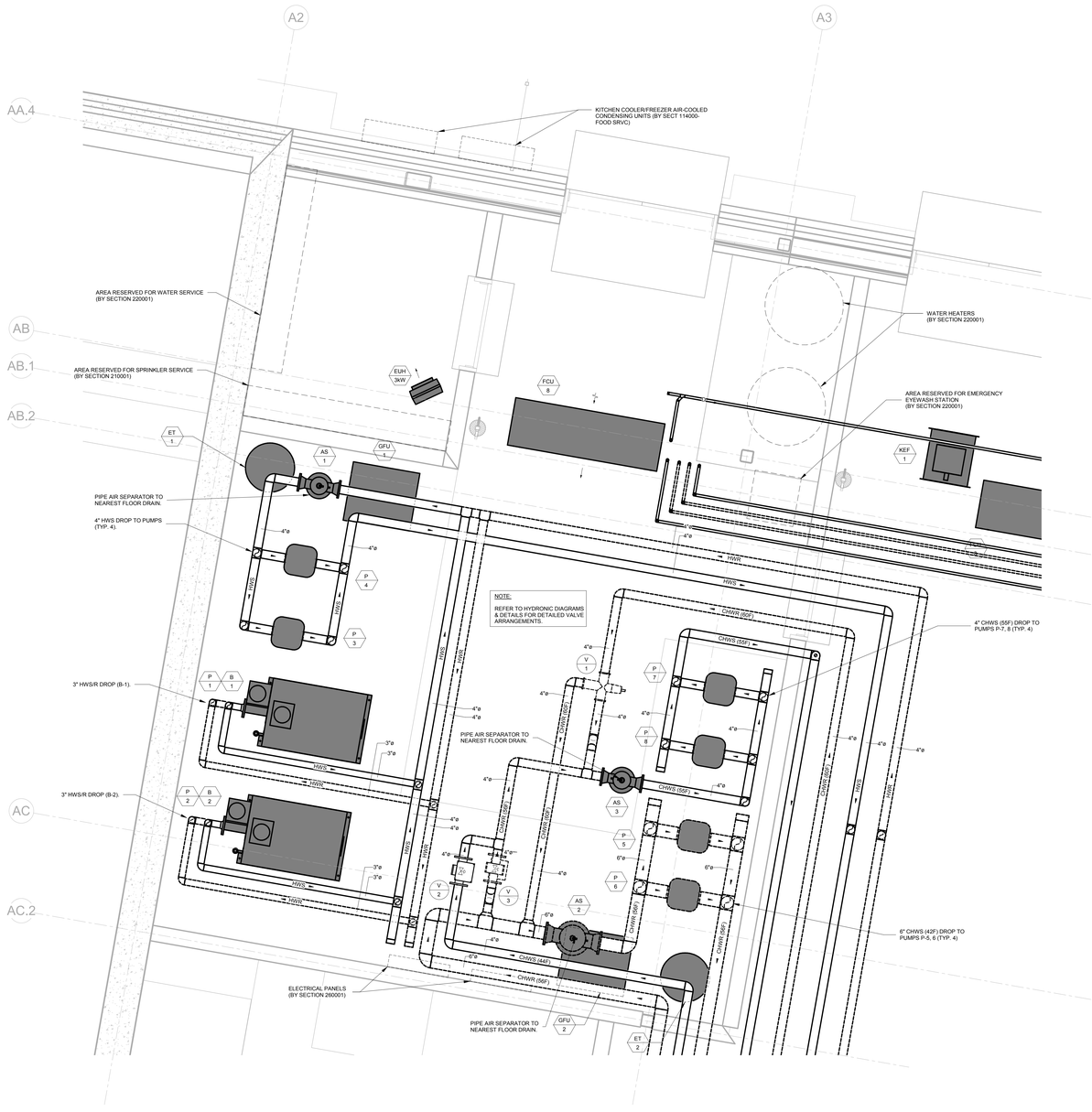

Called North

NORTH ARROW STAMP

Date 21 August 2020

Drawn By Author

Scale 1/2" = 1'-0"

Revisions

Number	Date	Descnption

90% COST ESTIMATE SET

ENLARGED MECHANICAL ROOM PLAN

9.6.01

© 2020 DiNisco Design

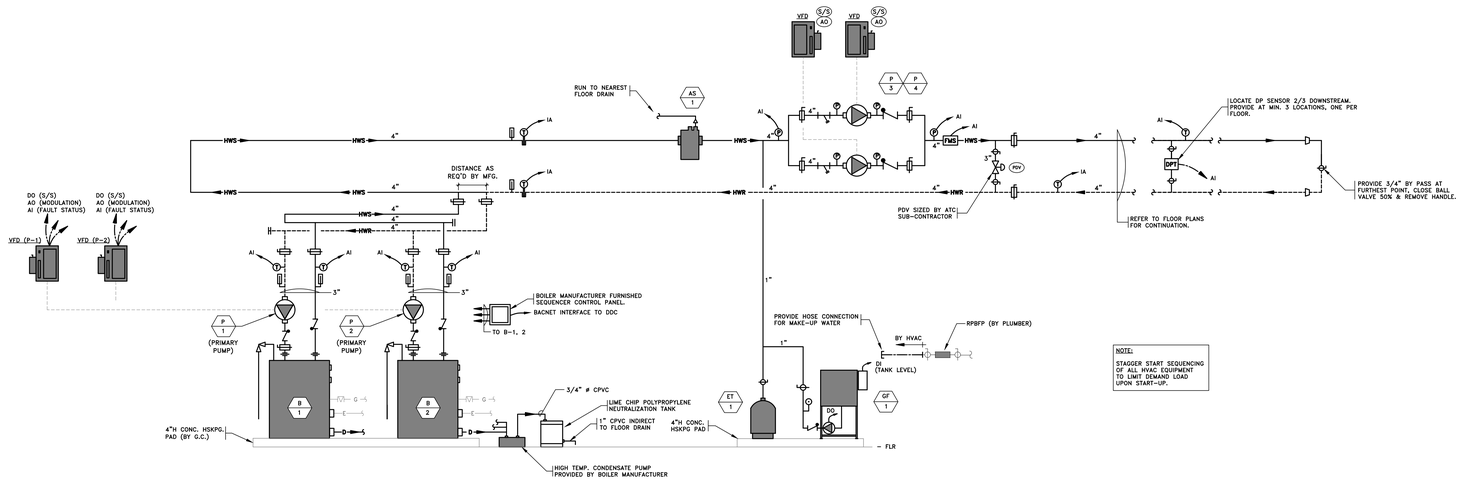

A. GENERAL

1. THE HOT WATER SYSTEM STARTUP AND SHUTDOWN SHALL BE AUTOMATICALLY CONTROLLED BY THE BAS. ALL INFORMATION AND GRAPHICS SHALL BE DISPLAYED BY THE BAS. ALL SETPOINT AND TIME DELAYS SHALL BE ADJUSTABLE THROUGH THE BAS.
2. PROVIDE START/STOP CONTROL, SPEED CONTROL AND MONITORING OF STATUS FOR THE HEATING WATER PUMPS' VARIABLE FREQUENCY DRIVES (VFD).
3. BAS SHALL PROVIDE FOR ROTATION OF LEAD/SPARE PUMPS ON A WEEKLY BASIS.
4. THE HOT SUPPLY WATER TEMPERATURE AT SENSOR HST SHALL BE RESET BY OUTDOOR AIR TEMPERATURE SENSOR OAT. THE UPPER END OF THE RESET SHALL BE LINEAR PER THE FOLLOWING TABLE.

HST (DEGREES)	OAT (DEGREES)
100	ABOVE 60
140	BELOW 20

B. BOILER CONTROLS (PROVIDED BY BAS CONTRACTOR)

1. HOT WATER SYSTEM SHALL BE ENERGIZED WHEN OAT DROPS BELOW 65°F.
2. WHEN STARTED INITIALLY, THE LEAD BOILER AND ASSOCIATED PUMPS SHALL START. THE SUPPLY WATER TEMPERATURE (140°F) OF OPERATING BOILERS SHALL BE MAINTAINED BY MODULATED FIRING OF THE BOILERS. THE CONTROLLER SHALL AUTOMATICALLY ROTATE THE LEAD BOILER THEREBY ASSURING THAT ALL BOILERS RECEIVE EQUAL RUNTIME.
3. BOILERS SHALL BE SEQUENCED TO MINIMIZE THE NUMBER OF BOILERS OPERATING AT THE SAME TIME. REFER TO MANUFACTURER BOILER CONTROLS BELOW.
4. WHEN LOAD DROPS THE LAG BOILER SHALL STOP.
5. BAS SHALL PROVIDE AN ALARM IF ANY BOILER FAILS AND START THE LAG BOILER, IN ADDITION TO BAS ALARM, PROVIDE A LOCAL AUDIO VISUAL PANEL TO DISPLAY INDIVIDUAL BOILER, PUMP AND ALARMS.

C. BOILER CONTROLS (BY BOILER MANUFACTURER)

1. ALL CONTROLS SHALL BE LOCATED IN A HINGED LOCKING METAL CABINET WITH NEMA 1A ENCLOSURE AND NEOPRENE DUST SEAL. CONTROLS SHALL BE ELECTRONIC. ALL WIRING SHALL BE COLOR CODED. PROVIDE CONTROL TRANSFORMER, AND FUSING IN ACCORDANCE WITH ALL CODE REQUIREMENTS.
2. THE INDIVIDUAL BOILERS SHALL MODULATE TO MAINTAIN REQUIRED BOILER WATER TEMPERATURE.
3. WHEN THE LEAD BOILER CAPACITY REACHES 80% (ADJ.), THE SECOND BOILER SHALL BE ENERGIZED, AND ONCE THE SECOND BOILER IS ENERGIZED, BOTH BOILERS SHALL BE MODULATED IN PARALLEL. THE OPPOSITE SHALL OCCUR AS THE LOAD DROPS.
4. BOILER MANUFACTURER SHALL PROVIDE BOILER CONTROL PANEL WITH SAFETY HIGH LIMIT, TERMINALS FOR CAPACITY CONTROL AND OUTDOOR AIR TEMPERATURE RESET. COORDINATE BOILER SEQUENCES, DATA, AND ALARM INTERFACE TO BAS VIA MODBUS CONTROLS.
5. PROVIDE PRE-PURGE AND POST-PURGE CYCLES WITH FULL PROTECTION AGAINST FLAME FAILURE DURING BOTH IGNITION AND NORMAL BURNER OPERATING PERIODS.
6. SAFETIES
   a. UPON THE FOLLOWING ALARMS, THE RESPECTIVE BOILER SHALL SHUT DOWN, THE LAG BOILER SHALL START, AND AN ALARM SHALL BE SENT TO THE BAS. RESET SHALL BE MANUAL.
      I. HIGH WATER TEMPERATURE SAFETY SWITCH
      II. LOW WATER PRESSURE SAFETY SWITCH

D. PRIMARY HOT WATER PUMP CONTROL (P-1 & 2)

1. THE PRIMARY PUMPS SHALL BE AUTOMATICALLY STARTED AND STOPPED BY THE BOILER BEFORE THE BOILER SYSTEM IS ACTIVATED. PRIMARY PUMPS SHALL BE DE-ENERGIZED OR CONTINUE TO OPERATE WHEN THE BOILER(S) GOES INTO IDLE MODE (AT BELOW MINIMUM LOAD), AS PER SPECIFIC REQUIREMENT OF THE PURCHASED BOILER.
2. PRIMARY PUMPS MODULATED BY BMS BETWEEN MAX AND MIN GPM OF BOILER DEPENDING ON BOILER LOAD AS TO MAINTAIN 40°F TD. COORDINATE EXACT MINIMUM GPM WITH FINAL BOILER. BAS CONTRACTOR, IN CONJUNCTION WITH TEST & BALANCE CONTRACTOR SHALL DETERMINE PRIMARY PUMPS ACTUAL OPERATING GPM'S AT VARIOUS CONTROL OUTPUT SIGNALS.

E. SECONDARY HOT WATER PUMP CONTROL (P-3 & 4)

1. THE LEAD PUMP SHALL BE STARTED AND STOPPED BY THE BAS BEFORE BOILER SYSTEM IS ACTIVATED.
2. WHICHEVER OPERATING PARAMETER BELOW CALLS FOR THE HIGHEST FLOW SHALL TAKE PRECEDENCE:
   a. THE LEAD PUMP VARIABLE FREQUENCY DRIVE (VFD) SHALL START AT LOW SPEED AND SLOWLY MODULATE TO THE LOWEST SPEED THAT WILL MAINTAIN THE REMOTE DIFFERENTIAL PRESSURE SENSOR/TRANSMITTER (DPT) SETPOINT AND SHALL RESET AS FLOW IS REDUCED. RECOMMENDED STARTING POINT IS 10 PSI AND RESET DOWN TO 4 PSI AS TOTAL SECONDARY FLOW GOES DOWN FROM 100% TO 50%. FINAL SETTING SHALL BE DETERMINED BY THE BALANCING CONTRACTOR TO THE LOWEST SETTING THAT WILL PROVIDE FULL FLOW TO THE MOST REMOTE HEATING COIL WITH MINIMUM EXCESS PRESSURE. INSTALL DPT NEAR MOST REMOTE HEATING COIL.
   b. THE PDV SHALL MODULATE TO MAINTAIN DP SET POINT OF PUMP DP + 2 PSIG.
   c. THE SECONDARY LOOP FLOW MEASURING STATION SHALL REPORT THE SYSTEM FLOW TO THE BUILDING MANAGEMENT SYSTEM AND VFD & PDV SHALL BE CONTROLLED TO ASSURE THAT SECONDARY FLOW IS ALWAYS EQUAL TO OR GREATER THAN THE PRIMARY FLOW.
   d. FLOW MEASURING STATION SHALL REPORT SYSTEM FLOW (GPM) TO THE BMS AND ASSURES THAT AT LEAST 20% OF ONE PUMP FLOW IS MAINTAIN TO PREVENT PUMP DEAD HEAD CONDITIONS.
3. PROVIDE FOR ROTATION OF LEAD/SPARE PUMP ON A WEEKLY BASIS.
4. IF LEAD PUMP FAILS, SPARE PUMP SHALL BE STARTED AND BAS SHALL ALARM.
5. A SECOND PUMP SHALL BE ENERGIZED WHEN THE FIRST PUMP IS AT 90% SPEED AND CANNOT MAINTAIN THE DP SETPOINT. ONCE THE SECOND PUMP IS ENERGIZED, BOTH PUMPS SHALL MODULATE IN PARALLEL.

F. GLYCOL FEED

1. PROVIDE LOW PRESSURE SENSOR FOR ALARM AT 5 PSIG BELOW FULL PUMP START PRESSURE AND TIE GLYCOL TANK LOW LEVEL ALARM TO BAS AND LOCAL ALARM PANEL. (SEE PIPING DETAIL FOR SETPOINTS OF FEED PUMP START/STOP SIGNAL) BMS CYCLES GLYCOL PUMP TO MAINTAIN SYSTEM PRESSURE AS SEEN BY THE AVERAGE VALUE OF SYSTEM PUMP INLET & OUTLET PRESSURE SENSORS.

G. REPORTING FUNCTIONS

1. HISTORIES
   a. THE BAS SHALL PRINT OUT ANY FLOW, TEMPERATURE, OR DATA FROM ANY SENSOR OR DEFINED VARIABLE ON REQUEST OF OPERATOR.
   b. THE BAS SHALL BE PROGRAMMED TO RECORD HISTORIES OF ALL TEMPERATURES, FLOW RATE, HOUR OF DAY, AND HOURS OF OPERATION ASSOCIATED WITH EACH PIECE OF EQUIPMENT. IN ADDITION, RECORD HISTORIES OF ANY OTHER ITEM OVER ANY TIME PERIOD REQUESTED BY THE OPERATOR. COORDINATE WITH OWNER FOR INITIAL LIST OF HISTORY ITEMS.
   c. THE BAS SHALL PRINT OUT ALL CHANGES IN EQUIPMENT STATUS AS THEY OCCUR.
2. ALARMS

   IN ADDITION TO THE ALARMS PREVIOUSLY LISTED, ALL SENSORS AND VARIABLES SHALL BE CAPABLE OF HIGH/LOW ALARM POINTS. AS A MINIMUM THE FOLLOWING SHALL BE ALARMED AFTER APPROPRIATE TIME DELAYS:
   a. IF ANY PIECE OF EQUIPMENT IS INDICATED AS OFF WHEN IT SHOULD BE ON (IGNORE IF BOILERS ARE TEMPORARILY OFF DUE TO LOW LOAD)
   b. IF HEATING SUPPLY TEMPERATURE HST EXCEEDS 10 DEGREES ABOVE OR BELOW THE CALCULATED RESET SET POINT DURING HEATING CYCLE. IGNORE THIS ALARM IF CYCLE HAS BEEN STARTED WITHIN 15 MINUTES.
   c. IF ANY PIECE OF EQUIPMENT IS ON THAT IS INDICATED AS OFF.
   d. ALL ALARMS SHALL BE UNIQUELY IDENTIFIABLE TO THE EQUIPMENT. GENERAL ALARMS OR CODES ARE NOT ACCEPTABLE.

   *ALARM MESSAGES SHALL BE DISPLAYED AT THE LOCAL BAS PANEL AND AT THE CENTRAL BAS CONSOLE AND PRINTER.
3. GRAPHICS
   a. PROVIDE FULL SYSTEM GRAPHIC DISPLAY (BOILERS, PUMPS, ETC.) WITH REAL TIME UPDATING OF CONDITIONS (STATUS, TEMPERATURES, ETC.).
   b. PROVIDE INDIVIDUAL GRAPHIC OF EACH SYSTEM (HOT WATER WITH DISTRIBUTION PUMPS) WITH REAL TIME UPDATING OF CONDITIONS (STATUS, TEMPERATURES, ETC.).

H. STANDBY POWER

1. ALL CONTROLS, ALL BOILERS, PRIMARY PUMPS P-1, 2 AND SECONDARY PUMPS P-3, 4 SHALL BE ON STANDBY POWER.
2. PROVIDE AUTOMATIC RESTART UPON LOSS OF NORMAL POWER AND UPON RETURN TO NORMAL POWER.

AMESBURY ELEMENTARY SCHOOL

AMESBURY, MA

DINISCO DESIGN
architects + planners

99 Chauncy Street, Suite 901
Boston, MA 02111
(617) 426-2858

DGT Associates
Surveying & Engineers
1071 Worcester Road
Framingham, MA 01701
(508) 879-0030

Brown Sardina, Inc.
Landscape Architects
24 Roland Street
Boston, MA 02129
(617) 482-4703

Foley Buhl Roberts & Assoc., Inc.
Structural Engineers
2150 Washington Street
Newton, MA 02462
(617) 527-9600

Crabtree McGrath Assoc., Inc.
Food Service Consultants
161 West Main Street
Georgetown, MA 01833
(978) 352-8500

VAV International, Inc.
Mechanical Engineers
400 West Cummings Park S. 4700
Woburn, MA 01801
(781) 935-7228

Thompson Engineering Company, Inc.
Electrical Engineers
89 Newbury Street, Suite 103
Danvers, MA 01923
(617) 866-9066

EdVance Technology Design, Inc.
Technology Consultants
300 Brickstone Square, Suite 201
Andover, MA 01880
(978) 256-9900

KEY PLAN

N
Called North

NORTH ARROW *STAMP*

Date: 21 August 2020

Drawn By: JH

Scale: NONE

Revisions

Number	Date	Description

90% COST ESTIMATE SET

HVAC CONTROLS

9.7.01

© 2020 DiNisco Design

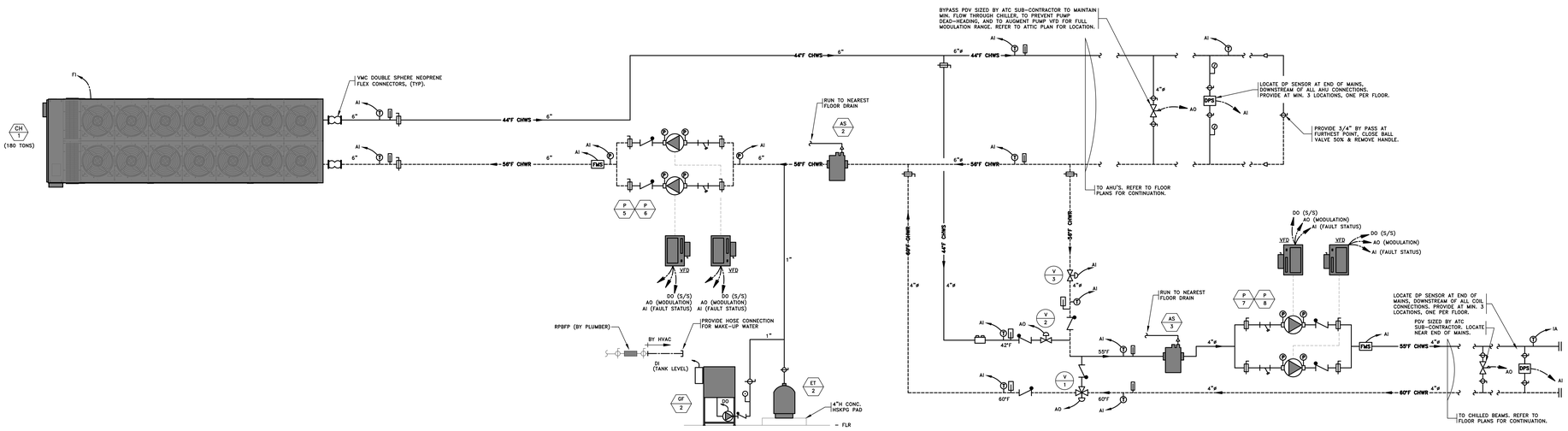

A. GENERAL

1. CHILLER MANUFACTURER SHALL PROVIDE FACTORY MOUNTED CHILLED WATER SUPPLY TEMPERATURE SENSOR TO CONTROL CHILLER CAPACITY, AND FS (FLOW SWITCH) TO VERIFY CHILLER FLOW. (FS SHALL BE INSTALLED BY BAS CONTRACTOR). MANUFACTURER SHALL PROVIDE ADJUSTABLE 3-5 SECONDS TIME DELAY BEFORE SHUTDOWN ON LOSS OF FLOW TO ALLOW TIME FOR CHW SPARE PUMP TO START.
2. CONTROL OF INTERNAL CHILLER OPERATION SHALL BE DONE THROUGH THE INTEGRAL CONTROL PANEL PROVIDED BY THE CHILLER.
3. AFTER STOPPING, CHILLER SHALL NOT START FOR 30 MINUTES OR AS REQUIRED BY MANUFACTURER. CHILLERS SHALL BE LIMITED TO TWO STARTS PER HOUR AND A MAXIMUM FIVE STARTS PER 24 HOUR PERIOD OR AS REQUIRED BY MANUFACTURER.
4. CHILLED WATER FS (FLOW SWITCH) SHALL PROVE FLOW AT MINIMUM CHILLER FLOW (VERIFY W/ MANUFACTURER).

B. CHILLER CONTROL

1. THE CHILLER SHALL BE SIGNALED TO START BY THE BAS WHEN THE OAT (OUTDOOR AIR TEMPERATURE SENSOR OAT) IS ABOVE 60°F (ADJ.), FOR 10 MINUTES (ADJ.).
2. MANUFACTURER SHALL PROVE FLOW BEFORE CHILLER IS STARTED AND CONTROL OPERATION INCLUDING ANTI-RECYCLING TIME DELAYS.
3. WHEN THE OAT DROPS BELOW 60°F (ADJ.) FOR 15 MINUTES, THE CHILLER SHALL BE STOPPED, AND AFTER 10 MINUTES (ADJ.) THE PUMP SHALL STOP.
4. BAS CONTRACTOR SHALL SIGNAL THE CHILLER TO PROVIDE THE FOLLOWING LINEAR OUTDOOR AIR WET BULB RESET SCHEDULE:

OA WB	TEMP.
OVER 79°F	44 (ADJ.)
UNDER 75°F	49 (ADJ.)

5. IF CHILLER FAILS, ALARM SHALL BE SENT TO THE BAS AND THE LOCAL ALARM PANEL.

C. 60°F CHILLED WATER SYSTEM PUMP CONTROL (P-5 & P-6)

1. THE LEAD PUMP SHALL BE AUTOMATICALLY STARTED AND STOPPED BY THE BAS BEFORE THE CHILLER SYSTEM IS ACTIVATED.
2. WHICHEVER OPERATING PARAMETER BELOW CALLS FOR THE HIGHEST FLOW SHALL TAKE PRECEDENCE:
   a. THE LEAD PUMP VARIABLE FREQUENCY DRIVE (VFD) SHALL START AT LOW SPEED AND SLOWLY MODULATE TO THE LOWEST SPEED THAT WILL MAINTAIN THE REMOTE DIFFERENTIAL PRESSURE SENSOR/TRANSMITTER (DPT) SETPOINT AND SHALL RESET AS FLOW IS REDUCED. RECOMMENDED STARTING POINT IS 10 PSI AND RESET DOWN TO A PSI AS TOTAL SECONDARY FLOW GOES DOWN FROM 100% TO 50%. FINAL SETTING SHALL BE DETERMINED BY THE BALANCING CONTRACTOR TO THE LOWEST SETTING THAT WILL PROVIDE FULL FLOW TO THE MOST REMOTE COOLING COIL WITH MINIMUM EXCESS PRESSURE. INSTALL DPT NEAR MOST REMOTE COOLING COIL.
   b. THE PDV SHALL MODULATE TO MAINTAIN DP SET POINT OF PUMP DP + 2 PSIG.
   c. THE SECONDARY LOOP FLOW MEASURING STATION SHALL REPORT THE SYSTEM FLOW TO THE BUILDING MANAGEMENT SYSTEM AND VFD & PDV SHALL BE CONTROLLED TO ASSURE THAT SECONDARY FLOW IS ALWAYS EQUAL TO OR GREATER THAN THE PRIMARY FLOW.
   d. FLOW MEASURING STATION SHALL REPORT SYSTEM FLOW (GPM) TO THE BMS AND ASSURES THAT AT LEAST 20% OF ONE PUMP FLOW IS MAINTAIN TO PREVENT PUMP DEAD HEAD CONDITIONS.
   e. FLOW MEASURING STATION SHALL REPORT SYSTEM FLOW (GPM) TO THE BMS AND ASSURES THAT MINIMUM CHILLER FLOW IS ALWAYS MAINTAIN. PDV SHALL MODULATE AS REQUIRED. COORDINATE MINIMUM FLOW WITH FINAL APPROVED CHILLER.
3. PROVIDE ROTATION OF LEAD/SPARE PUMP ON A WEEKLY BASIS.
4. IF LEAD PUMP FAILS, SPARE PUMP SHALL BE STARTED AND BAS SHALL ALARM.
5. A SECOND PUMP SHALL BE ENERGIZED WHEN THE FIRST PUMP IS AT 90% SPEED AND CANNOT MAINTAIN THE DP SETPOINT. ONCE THE SECOND PUMP IS ENERGIZED, BOTH PUMPS SHALL MODULATE IN PARALLEL.

D. 55°F CHILLED BEAM CHILLED WATER PUMP CONTROL (P-7 & P-8)

1. THE LEAD PUMP SHALL BE STARTED AND STOPPED BY THE BAS.
2. WHICHEVER OPERATING PARAMETER BELOW CALLS FOR THE HIGHEST FLOW SHALL TAKE PRECEDENCE:
   a. THE LEAD PUMP VARIABLE FREQUENCY DRIVE (VFD) SHALL START AT LOW SPEED AND SLOWLY MODULATE TO THE LOWEST SPEED THAT WILL MAINTAIN THE REMOTE DIFFERENTIAL PRESSURE SENSOR/TRANSMITTER (DPT) SETPOINT AND SHALL RESET AS FLOW IS REDUCED. RECOMMENDED STARTING POINT IS 10 PSI AND RESET DOWN TO A PSI AS TOTAL SECONDARY FLOW GOES DOWN FROM 100% TO 50%. FINAL SETTING SHALL BE DETERMINED BY THE BALANCING CONTRACTOR TO THE LOWEST SETTING THAT WILL PROVIDE FULL FLOW TO THE MOST REMOTE COOLING COIL WITH MINIMUM EXCESS PRESSURE. INSTALL DPT NEAR MOST REMOTE COOLING COIL.
   b. THE PDV SHALL MODULATE TO MAINTAIN DP SET POINT OF PUMP DP + 2 PSIG.
   c. FLOW MEASURING STATION SHALL REPORT SYSTEM FLOW (GPM) TO THE BMS AND ASSURES THAT AT LEAST 20% OF ONE PUMP FLOW IS MAINTAIN TO PREVENT PUMP DEAD HEAD CONDITIONS.
3. PROVIDE FOR ROTATION OF LEAD/SPARE PUMP ON A WEEKLY BASIS.
4. IF LEAD PUMP FAILS, SPARE PUMP SHALL BE STARTED AND BAS SHALL ALARM.
5. A SECOND PUMP SHALL BE ENERGIZED WHEN THE FIRST PUMP IS AT 90% SPEED AND CANNOT MAINTAIN THE DP SETPOINT. ONCE THE SECOND PUMP IS ENERGIZED, BOTH PUMPS SHALL MODULATE IN PARALLEL.

E. VALVES V-1 & V-2 CONTROLS

1. CHWS TEMPERATURE SHALL ALWAYS BE MAINTAINED 1°F ABOVE THE HIGHEST RETURN AIR DEWPOINT OF ALL THE ERU'S, OR 55°F MINIMUM.
2. 3-WAY ACV "V-1" SHALL MODULATE TO MAINTAIN THE CHILLED BEAM CHWS TEMPERATURE OF 55°F SETPOINT. THIS VALVE WILL DIVERT THE 60°F CHILLED BEAM CHWR AS REQUIRED TO ALLOW THE 60°F CHWR WATER TO MIX WITH THE 52°F CHWR WATER IN ORDER TO MAINTAIN THE 55°F SETPOINT.
3. 3-WAY ACV "V-2" SHALL SHALL ONLY OPERATE IF V-1 IS FULLY OPEN WITH 100% 52°F CHWR BEING UTILIZED. THIS WOULD INDICATE THAT THE CHW SETPOINTS HAVE BEEN RESET UP AND ADDITIONAL COOLING IS NEEDED. IN THIS CASE, VALVE V-2 SHALL MODULATE CHWR TO BLEED 60°F CHWS INTO THE SYSTEM TO TO MAINTAIN THE CHILLED BEAM CHWS TEMPERATURE OF 55°F SETPOINT.
4. 2-WAY ACV "V-3" SHALL REMAIN OPEN AT ALL TIMES.

F. WINTER FREEZE PROTECTION

1. WHEN OAT DROPS TO 7°F, SYSTEM PRIMARY PUMPS SHALL OPERATE CONTINUOUSLY AT 50% SPEED WITH PDV OPEN 50%. ALL UNIT CHW ACV'S SHALL BE CLOSED.

G. GLYCOL FEED

1. PROVIDE LOW PRESSURE SENSOR FOR ALARM AT 5 PSIG BELOW FULL PUMP START PRESSURE AND TIE GLYCOL TANK LOW LEVEL ALARM TO BAS AND LOCAL ALARM PANEL. (SEE PIPING DETAIL FOR SETPOINTS OF FEED PUMP START/STOP SIGNAL.) GLYCOL PUMP CYCLES TO MAINTAIN SYSTEM PRESSURE AS SEEN BY THE AVERAGE VALUE OF SYSTEM PUMP INLET & OUTLET PRESSURE SENSORS.

H. REPORTING FUNCTIONS

1. HISTORIES
   a. THE BAS SHALL PRINT OUT ANY FLOW, TEMPERATURE, OR DATA FROM ANY SENSOR OR DEFINED VARIABLE ON REQUEST OF OPERATOR.
   b. THE BAS SHALL BE PROGRAMMED TO RECORD HISTORIES OF ALL TEMPERATURES, FLOW RATE, HOUR OF DAY, AND HOURS OF OPERATION ASSOCIATED WITH EACH PIECE OF EQUIPMENT. IN ADDITION, RECORD HISTORIES OF ANY OTHER ITEM OVER ANY TIME PERIOD REQUESTED BY THE OPERATOR. COORDINATE WITH OWNER FOR INITIAL LIST OF HISTORY ITEMS.
   c. THE BAS SHALL PRINT OUT ALL CHANGES IN EQUIPMENT STATUS AS THEY OCCUR.
2. ALARMS

   IN ADDITION TO THE ALARMS PREVIOUSLY LISTED, ALL SENSORS AND VARIABLES SHALL BE CAPABLE OF HIGH/LOW ALARM POINTS. AS A MINIMUM THE FOLLOWING SHALL BE ALARMED AFTER APPROPRIATE TIME DELAYS:
   a. IF ANY PIECE OF EQUIPMENT IS INDICATED AS OFF WHEN IT SHOULD BE ON (IGNORE IF CHILLER IS TEMPORARILY OFF DUE TO LOCK OUT)
   b. IF COOLING SUPPLY TEMPERATURE EXCEEDS 4 DEGREES ABOVE OR BELOW THE CALCULATED RESET SET POINT DURING COOLING CYCLE. IGNORE THIS ALARM IF CYCLE HAS BEEN STARTED WITHIN 15 MINUTES.
   c. IF ANY PIECE OF EQUIPMENT IS ON THAT IS INDICATED AS OFF.
   d. ALL ALARMS SHALL BE UNIQUELY IDENTIFIABLE TO THE EQUIPMENT. GENERAL ALARMS OR CODES ARE NOT ACCEPTABLE.

   *ALARM MESSAGES SHALL BE DISPLAYED AT THE LOCAL BAS PANEL AND AT THE CENTRAL BAS CONSOLE AND PRINTER.
3. GRAPHICS
   a. PROVIDE FULL SYSTEM GRAPHIC DISPLAY (CHILLER, PUMPS, ETC.) WITH REAL TIME UPDATING OF CONDITIONS (STATUS, TEMPERATURES, ETC.).
   b. PROVIDE INDIVIDUAL GRAPHIC OF EACH SYSTEM (CHILLED WATER WITH DISTRIBUTION PUMPS) WITH REAL TIME UPDATING OF CONDITIONS (STATUS, TEMPERATURES, ETC.).

AMESBURY ELEMENTARY SCHOOL

AMESBURY, MA

DINISCO DESIGN
architects + planners

99 Chauncy Street, Suite 901
Boston, MA 02111
(617) 426-2858

DGT Associates
Surveying & Engineers
1071 Worcester Road
Framingham, MA 01701
(508) 879-0030

Brown Sardina, Inc.
Landscape Architects
24 Roland Street
Boston, MA 02129
(617) 482-4703

Foley Buhl Roberts & Assoc., Inc.
Structural Engineers
2150 Washington Street
Newton, MA 02462
(617) 527-9600

Crabtree McGrath Assoc., Inc.
Food Service Consultants
161 West Main Street
Georgetown, MA 01833
(978) 352-8500

VAV International, Inc.
Mechanical Engineers
400 West Cummings Park S. 4700
Woburn, MA 01801
(781) 935-7228

Thompson Engineering Company, Inc.
Electrical Engineers
89 Newbury Street, Suite 103
Danvers, MA 01923
(617) 866-9066

EdVance Technology Design, Inc.
Technology Consultants
300 Brickstone Square, Suite 201
Andover, MA 01880
(978) 256-9900

KEY PLAN



NORTH ARROW *STAMP*

Date: 21 August 2020

Drawn By: JH

Scale: NONE

Revisions

Number	Date	Description

90% COST ESTIMATE SET

HVAC CONTROLS

9.7.02

© 2020 DiNisco Design

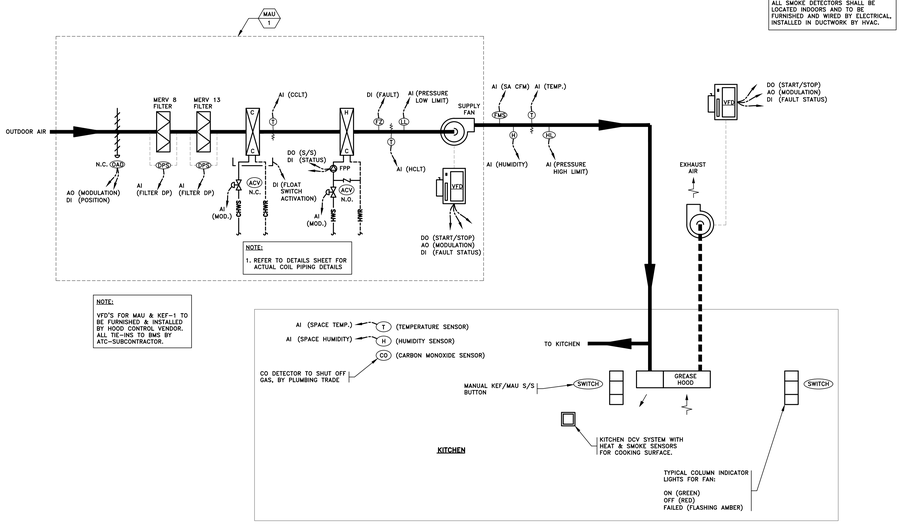

NOTE:
ALL SMOKE DETECTORS SHALL BE LOCATED INDOORS AND TO BE FURNISHED AND WIRED BY ELECTRICAL, INSTALLED IN DUCTWORK BY HVAC.

A. GENERAL

1. KITCHEN GREASE HOOD FAN SHALL BE MANUALLY STARTED VIA LOCAL SWITCHES. SWITCHES SHALL BE TIED INTO THE DDC SYSTEM FOR POSITION STATUS. PROVIDE CURRENT TRANSFORMERS FOR AHU AND EXHAUST FANS TO INDICATE STATUS/FAILURE. BAS CONTRACTOR SHALL PROVIDE THREE SETS OF LABELED COLUMN INDICATOR LIGHTS (3-COLOR) TO INDICATE WHEN THE ASSOCIATED FAN OR MAU IS ON (GREEN), OFF (RED), OR FAILED (FLASHING AMBER).
2. KITCHEN GREASE HOODS, DCV CONTROLS WITH KEF-1 VFD'S SHALL BE BASED ON MELINK SYSTEM.
3. MAKE-UP AIR UNIT SHALL BE CONTROLLED BY PROGRAMMABLE DDC CONTROLLER. UNIT SHALL BE INTERLOCKED WITH THE GREASE HOOD EXHAUST FAN. ALL SETPOINTS SHALL BE ADJUSTABLE. ALL ACTUATORS SHALL BE ELECTRONIC. BAS CONTRACTOR SHALL PROVIDE ALL EXHAUST FAN CONTROLS, INSTALL ALL REMOTE AHU SENSORS AND COORDINATE/INTERFACE WITH WITH RTU CONTROLLER TO PROVIDE GRAPHICS (WITH ALL DATA) AND ALARMS AT THE OPERATOR'S WORKSTATION.
4. LOCAL HAND-OFF-AUTOMATIC SWITCH (H-O-A) FOR FANS SHALL OVERRIDE DDC START/STOP (S/S) COMMANDS. ALL HARDWIRED SAFETIES SHALL BE ACTIVE IN BOTH 'H' AND 'A' POSITIONS.
5. ALL TEMPERATURES LISTED ARE FAHRENHEIT.
6. ALL TEMPERATURE SENSORS IN THE UNIT AND DUCTWORK SHALL BE AVERAGING TYPE EXCEPT FOR FREEZESTATS WHICH SHALL BE LOW POINT READING TYPE. FREEZESTATS SHALL RESET AUTOMATICALLY. IF AFTER 5 MINUTES OF CONTINUOUS FREEZING CONDITION, FREEZESTAT SHALL SHUT-DOWN UNIT AND RESET SHALL THEN BE MANUAL.
7. ATC, IN CONJUNCTION WITH BALANCING CONTRACTOR SHALL PROFILE ACTUAL KEF OPERATING CFM AT VARIOUS DCV CONTROL OUTPUT 0-10V (OR 4Ø-2Ø mA) SIGNALS.
8. FREEZE PROTECTION PUMP (FPP)- OPERATES CONTINUOUSLY WHEN OAT FALLS BELOW 37°F OR SAT SETPOINT NOT BEING ACHIEVED AT ANY TIME DUE TO RESTRICTION FROM IDLE FPP. FPP AND HW ACV SHALL OPERATE TO MAINTAIN MINIMUM HC LOOP SET POINT OF 52°F AT ANY TIME.

B. FAN CONTROL

1. WHEN OFF, THE SUPPLY AND EXHAUST FANS SHALL BE OFF WITH THE ASSOCIATED OUTSIDE AIR DAMPER (OAD) CLOSED, HW ACV'S (IF APPLICABLE) CLOSED.
2. WHEN THE GREASE HOOD EXHAUST FAN IS STARTED, THE OAD SHALL OPEN AND THE SUPPLY FAN SHALL START AND MODULATE BETWEEN 100%-50% AS CONTROLLED BY COOKING LINE HEAT & SMOKE SENSORS. BAS SHALL MODULATE MAU-1 SUPPLY FAN TO TRACK TRACK SUM OF KEF-1 CFM (DCV OUTPUT SIGNAL) LESS 500 CFM (ADJ.) OFFSET TO MAINTAIN NEGATIVE PRESSURE.

C. OCCUPIED COOLING CONTROL (CHILLED WATER)

1. SUPPLY AIR TEMPERATURE SENSORS (SAT) SHALL ALWAYS CONTROL CHW ACV TO MAINTAIN A MINIMUM SUPPLY AIR TEMPERATURE OF 48°F (ADJUSTABLE).
2. UPON A RISE OF SPACE TEMPERATURE ABOVE THE COOLING SETPOINT OF 76°F (ADJ.), SUPPLY AIR TEMPERATURE SHALL RESET BETWEEN 55°F AND 76°F AS REQUIRED TO MAINTAIN COOLING SETPOINT TEMPERATURE. THE REVERSE SHALL OCCUR ON A DROP IN SPACE TEMPERATURE BELOW THE COOLING SETPOINT.

D. OCCUPIED HEATING CONTROL (HOT WATER)

1. HOT WATER COIL LEAVING AIR TEMPERATURE SENSOR (HCLT) SHALL ALWAYS CONTROL HW ACV TO MAINTAIN A MINIMUM TEMPERATURE OF 50°F (ADJUSTABLE) WHETHER UNIT IS ON OR OFF.
2. UPON A DROP OF SPACE TEMPERATURE BELOW THE HEATING SETPOINT OF 70°F (ADJ.), HW ACV SHALL MODULATE AS REQUIRED TO RESET SUPPLY AIR TEMPERATURE BETWEEN 55°F AND 80°F (ADJ.) TO MAINTAIN SPACE HEATING SETPOINT TEMPERATURE. THE REVERSE SHALL OCCUR ON A RISE IN SPACE TEMPERATURE ABOVE HEATING SETPOINT.

E. UNOCCUPIED CONTROL

1. SPACES PROVIDED WITH AUXILIARY HEAT (SUCH AS UNIT HEATER, FTR OR RADIANT HEATING) SHALL UTILIZE THE AUXILIARY HEAT AS THE PRIMARY MEANS OF HEATING. THE AHU SHALL BE USED AS SECONDARY STAGE HEATING AS FOLLOWS:

o- IF, WHEN THE UNIT IS OFF, THE AVERAGE SPACE TEMPERATURE FALLS BELOW 54°F OR IF ANY SPACE DROPS BELOW 40°F, THE UNIT FANS SHALL START WITH RAD OPEN, EAD AND OAD CLOSED, THE DAT SHALL RESET HCLT TO SUPPLY 80°F AIR. WHEN ALL SPACE TEMPERATURES RISE ABOVE 59°F, THE UNIT SHALL SHUT DOWN.

F. SAFETIES

1. UNIT SHALL SHUT DOWN IN EVENT WHEN ANY SMOKE DETECTOR OR FIRE ALARM CONDITION IS DETECTED.
2. ANY FREEZING CONDITION DETECTED WITHIN UNIT SHALL SHUT DOWN UNIT. OAD & EAD SHALL CLOSE, RAD SHALL OPEN, AND HW ACV (IF APPLICABLE) SHALL FULLY OPEN.
3. FREEZESTAT SHALL BE AUTO-RESET TYPE AND SHALL ONLY SHUT DOWN UNIT AFTER 15 MINUTES OF CONTINUOUS ACTIVATION. FREEZESTAT SHALL SEND ALARM TO FRONT END UPON INITIAL ACTIVATION AND SHALL BE REMOTELY RESETTABLE.
4. WHEN SA & RA DPT INDICATES DUCT OVER OR UNDER PRESSURE.
5. BAS WILL MONITOR ANSUL & CO DETECTION SYSTEM THROUGH DRY SET OF CONTACTS. WHEN ANSUL SYSTEM OR CO DETECTION SYSTEM IS ACTIVATED, MAU-1 SHALL SHUT OFF AND KEF'S WILL CONTINUE TO OPERATE (PROGRAMMED TO SHUT OFF, IF REQ'D BY BUILDING OFFICIAL).

G. ALARMS

1. ANY SAFETY LISTED ABOVE
2. FAILURE OF ANY AHU COMPONENTS.
3. WHEN ACTUAL TEMPERATURE, RH, DPT, OR FLOW DEVIATES FROM SET POINT OR INTENDED RESET PARAMETERS.
4. IF FILTER PRESSURE DROP EXCEEDS THE PREDETERMINED SET POINT. VALUE FOR MERV 8 FILTERS IS 0.6' WG AND VALUE FOR MERV 13 FILTERS IS 1.2' WG.
5. ALARM MESSAGE SHALL BE DETAILED WITH SPECIFIC UNIT TAG NUMBER, COMPONENT IDENTIFICATION, AND EXACT NATURE.
6. LEVEL OF ALARM STATUS SHALL BE AS DIRECTED BY OWNER.

A MAU-1 & KEF-1 CONTROL DIAGRAM AND SEQUENCE
NOT TO SCALE

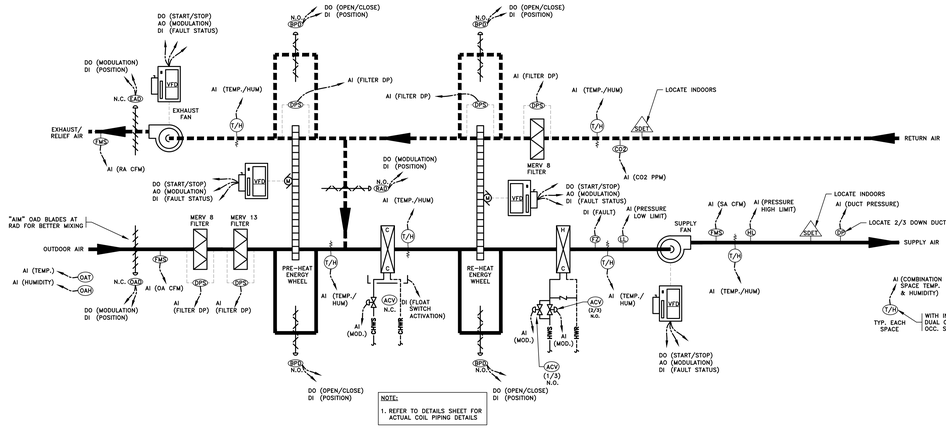

NOTE:
1. REFER TO DETAILS SHEET FOR ACTUAL COIL PIPING DETAILS

NOTE:
ALL SMOKE DETECTORS SHALL BE LOCATED INDOORS AND TO BE FURNISHED AND WIRED BY ELECTRICAL, INSTALLED IN DUCTWORK BY HVAC.

A. GENERAL

1. ENERGY RECOVERY UNIT SHALL BE STARTED AND STOPPED VIA DEDICATED DDC CONTROLLER. COORDINATE OCCUPIED AND UNOCCUPIED SCHEDULES WITH OWNER. ALL SETPOINTS SHALL BE ADJUSTABLE. ALL ACTUATORS SHALL BE ELECTRONIC.
2. LOCAL HAND-OFF AUTOMATIC SWITCH (H-O-A) FOR FANS OR DISCONNECT SHALL OVERRIDE DDC START/STOP (S/S) COMMANDS. ALL HARDWIRED SAFETIES SHALL BE ACTIVE IN BOTH 'H' AND 'A' POSITIONS.
3. ALL TEMPERATURES LISTED ARE FAHRENHEIT.
4. ALL TEMPERATURE SENSORS IN THE UNIT AND DUCTWORK SHALL BE AVERAGING TYPE EXCEPT FREEZESTATS WHICH SHALL BE LOW POINT READING TYPE & REMOTELY RESETTABLE.
5. THE HEATING COIL ACV (IF APPLICABLE) SHALL BE CONTROLLED BY THE HEATING COIL LEAVING TEMPERATURE SENSOR (HCLT) TO MAINTAIN 50°F IN THE UNIT CASING.
6. FREEZE PROTECTION PUMP (FPP)- OPERATES CONTINUOUSLY WHEN OAT FALLS BELOW 37°F OR SAT SETPOINT NOT BEING ACHIEVED AT ANY TIME DUE TO RESTRICTION FROM IDLE FPP. FPP AND HW ACV SHALL OPERATE TO MAINTAIN MINIMUM HC LOOP SET POINT OF 52°F AT ANY TIME.

B. FAN CONTROL

1. WHILE IN UNOCCUPIED MODE (OR OFF ON SAFETY MANUAL DISCONNECT) ERU SUPPLY AND EXHAUST FANS SHALL BE OFF WITH THE OUTSIDE AIR DAMPER (OAD) CLOSED, THE EXHAUST AIR DAMPER (EAD) CLOSE, THE BYPASS DAMPER (BPD) OPEN, AND THE CHW ACV (IF APPLICABLE) CLOSED. ALSO REFER TO UNOCCUPIED HEATING CONTROL SECTION FOR FURTHER CONTROL.
2. WHEN STARTED IN OCCUPIED MODE, WITH OAD FULLY OPEN, SUPPLY FAN OPERATES CONTINUOUSLY TO MAINTAIN CONSTANT DESIGN AIR FLOW AS SEEN BY ITS FANS. WITH EAD FULLY OPEN EXHAUST FAN OPERATES CONTINUOUSLY TO MAINTAIN CONSTANT DESIGN AIR FLOW TO TRACK SUPPLY FAN CFM LESS TOILET EXHAUST AMOUNT, TO ASSURE THAT BUILDING IS MAINTAINED AT NEUTRAL OR SLIGHTLY POSITIVE PRESSURE.

C. OCCUPIED HEATING CONTROL (HOT WATER)

1. ERU OPERATES IN 100% OA MODE WITH ENERGY WHEEL SPEEDS CONTROLLED TO OPTIMIZE ENERGY RECOVERY.
2. PRE-HEAT WHEEL (OR BYPASS DAMPER, DEPENDING ON MANUFACTURER'S RECOMMENDATION) ALSO OPERATES TO PREVENT ENERGY WHEEL FROSTING FROM OVER-RECOVERY WITH INPUTS FROM RAT, RAH, EAT, EAH, AND WHEEL DP SENSORS. FROST PROTECTION MODE SHALL ONLY BE ENABLED IF DP ACROSS WHEEL INCREASES, INDICATING FROST BUILD-UP.
3. RE-HEAT WHEEL OPERATES TO MAINTAIN 65°F HEATING COIL LEAVING TEMPERATURE (HCLT). IF SETPOINT CANNOT BE MAINTAINED, HW ACV SHALL MODULATE TO MAINTAIN 65°F DAT SET POINT WITH MAXIMUM 47 GRAINS/LB. IF AVERAGE SPACE TEMPERATURE FALLS 2°F BELOW SET POINT FOR 1 OR MORE HOUR, DAT SHALL BE RESET UP IN 2°F INCREMENTS UNTIL THE CONDITION IS CORRECTED. ONCE CORRECTED, THE SYSTEM REVERTS BACK TO NORMAL MODE OF MAINTAINING 65°F DAT.

D. OCCUPIED COOLING CONTROL (CHILLED WATER)

1. ERU OPERATES IN 100% OA MODE.
2. FIRST WEANS OF COOLING SHALL BE ACTIVATION OF THE ECONOMIZER. IF THE OUTSIDE AIR ENTHALPY IS BELOW THE RETURN AIR ENTHALPY, PRE-HEAT ENERGY WHEEL SHALL BE OFF AND BYPASS DAMPERS OPEN. IF ADDITIONAL COOLING IS REQUIRED, THE CHW ACV SHALL MODULATE AS REQUIRED TO MAINTAIN COOLING COIL LEAVING TEMPERATURE (CCLT) SETPOINT OF 52°F. THE REVERSE SHALL OCCUR ON A DROP BELOW COOLING SETPOINT. FOR EVERY 10 MINUTES THAT THE ECONOMIZER MODE IS ENABLED, THE ENERGY WHEEL SHALL BE ENABLED FOR 1 MINUTE. THIS CYCLE SHALL REPEAT EVERY 10 MINUTES.
3. IF THE OUTSIDE AIR ENTHALPY RISES ABOVE THE RETURN AIR ENTHALPY, ENERGY WHEEL SPEED SHALL BE CONTROLLED TO OPTIMIZE ENERGY RECOVERY. CHW ACV SHALL MODULATE TO MAINTAIN 52°F CCLT SET POINT.
4. RE-HEAT ENERGY WHEEL OPERATES TO MAINTAIN 65°F/54°F DB/WB DAT FROM UNIT WITH MAX 47 GRAINS/LB.
5. IF AVERAGE SPACE TEMPERATURE RISES TO 2°F ABOVE SET POINT FOR MORE THAN 30 MINUTES, CCLT SHALL BE DECREASED IN 1°F INCREMENTS DOWN TO 49°F UNTIL THE COOLING SET POINT IS ACHIEVED.
6. IF AVERAGE SPACE TEMPERATURE FALLS TO 2°F BELOW SET POINT FOR MORE THAN 30 MINUTES DURING COOLING OPERATION, DAT SHALL RESET UP IN 1°F INCREMENTS UNTIL THE SETPOINT IS ACHIEVED. RHN SHALL BE ALLOWED TO CLIMB 5% ABOVE SETPOINT. IF RH CLIMBS TOO HIGH, CCLT SHALL RESET BACK DOWN IN 1°F INCREMENTS.

E. UNOCCUPIED CONTROL

5. COOLING: NO SETBACK.
6. HEATING SETBACK SET POINT SHALL BE 55°F. UNIT REMAINS OFF UNTIL AVERAGE INSIDE TEMPERATURE FALLS TO 54°F OR IF ANY (1) SPACE DROPS BELOW 45°F. WITH OAD FULLY CLOSED, RAD OPEN, EAD CLOSED, EF OFF, SUPPLY FAN OPERATES CONTINUOUSLY TO MAINTAIN 67% OF DESIGN AIR FLOW AS SEEN BY ITS FMS IN 100% RECIRCULATION MODE. DAT SETPOINT SHALL BE 80°F. IF SETPOINTS ARE NOT MET AFTER 15 MINUTES, AIR FLOW SHALL BE INCREASED IN 5% INCREMENTS UNTIL ALL SPACES CATCH UP TO 55°F SETBACK SET POINT. ONCE ALL SPACES REACH 59°F, UNIT SHALL TURN OFF.

F. WARM-UP/COOL DOWN CONTROL

1. HEATING: DDC CONTROLLER SHALL PROVIDE OPTIMUM START CAPABILITY. ERU OPERATES IN 100% RECIRCULATION MODE WITH SUPPLY FAN OPERATING AT 80% SPEED, AND WITH INDUCTION UNITS' HW COIL ACV'S ACTIVATED TO WARM-UP SPACES TO 70°F AVERAGE OCCUPIED SET POINT. FIFTEEN MINUTES BEFORE SCHEDULED OCCUPANCY TIME ERU SHALL BEGIN TO OPERATE IN THE OCCUPIED HEATING MODE.
2. COOLING: DDC CONTROLLER SHALL PROVIDE OPTIMUM START CAPABILITY. ERU OPERATES IN 100% RECIRCULATION MODE WITH SUPPLY FAN OPERATING AT 80% SPEED, AND WITH INDUCTION UNITS' CHW COIL ACV'S SHUT OFF TO COOL-DOWN SPACES TO 76°F AVERAGE OCCUPIED SET POINT. FIFTEEN MINUTES BEFORE SCHEDULED OCCUPANCY TIME ERU SHALL BEGIN TO OPERATE IN THE OCCUPIED COOLING MODE.

G. SAFETIES

1. UNIT SHALL SHUT DOWN IN EVENT WHEN ANY SMOKE DETECTOR OR FIRE ALARM CONDITION IS DETECTED.
2. ANY FREEZING CONDITION DETECTED WITHIN UNIT SHALL SHUT DOWN UNIT. OAD & EAD SHALL CLOSE, RAD SHALL OPEN, AND HW ACV (IF APPLICABLE) SHALL FULLY OPEN.
3. FREEZESTAT SHALL BE AUTO-RESET TYPE AND SHALL ONLY SHUT DOWN UNIT AFTER 15 MINUTES OF CONTINUOUS ACTIVATION. FREEZESTAT SHALL SEND ALARM TO FRONT END UPON INITIAL ACTIVATON AND SHALL BE REMOTELY RESETTABLE.
4. WHEN SA & RA DPT INDICATES DUCT OVER OR UNDER PRESSURE.

H. ALARMS

1. ANY SAFETY LISTED ABOVE.
2. FAILURE OF ANY UNIT COMPONENTS.
3. WHEN ACTUAL TEMPERATURE, RH, DPT, OR FLOW DEVIATES FROM SET POINT OR INTENDED RESET PARAMETERS.
4. IF FILTER PRESSURE DROP EXCEEDS THE PREDETERMINED SET POINT. VALUE FOR MERV 8 FILTERS IS 0.6' WG AND VALUE FOR MERV 13 FILTERS IS 1.2' WG.
5. ALARM MESSAGE SHALL BE DETAILED WITH SPECIFIC UNIT TAG NUMBER, COMPONENT IDENTIFICATION, AND EXACT NATURE.
6. LEVEL OF ALARM STATUS SHALL BE AS DIRECTED BY OWNER.

I. STAND-BY POWER

1. THIS ERU IS CONNECTED TO STAND-BY POWER. PROVIDE AUTOMATIC RESTART SEQUENCE UPON POWER FAILURE AND SWITCH TO STAND-BY POWER AND UPON RETURN TO NORMAL POWER.

J. SUMMER PARTIAL OCCUPANCY MODE

1. THE SYSTEM IS DESIGNED SO THAT DOWN TO ONE FLOOR CAN BE OPERATED BY RUNNING ONE ERU AT 33%-40% CAPACITY & WITH APPROPRIATE ACD POSITIONING.

B ERU-1, 2 CONTROL DIAGRAM AND SEQUENCE
NOT TO SCALE

AMESBURY ELEMENTARY SCHOOL

AMESBURY, MA

DINISCO DESIGN architects + planners
99 Chauncy Street, Suite 901
Boston, MA 02111
(617) 426-2858

DGT Associates
Surveying & Engineers
1071 Worcester Road
Framingham, MA 01701
(508) 879-0030

Brown Sardina, Inc.
Landscape Architects
24 Roland Street
Boston, MA 02129
(617) 482-4703

Foley Buhl Roberts & Assoc., Inc.
Structural Engineers
2150 Washington Street
Newton, MA 02462
(617) 527-9600

Crabtree McGrath Assoc., Inc.
Food Service Consultants
161 West Main Street
Georgetown, MA 01833
(978) 352-8500

VAV International, Inc.
Mechanical Engineers
400 West Cummings Park S. 4700
Woburn, MA 01801
(781) 935-7228

Thompson Engineering Company, Inc.
Electrical Engineers
89 Newbury Street, Suite 103
Danvers, MA 01923
(617) 866-9066

EdVance Technology Design, Inc.
Technology Consultants
300 Brickstone Square, Suite 201
Andover, MA 01880
(978) 256-9900

KEY PLAN



NORTH ARROW | STAMP

Date: 21 August 2020
Drawn By: JH
Scale: NONE

Revisions

Number	Date	Description

90% COST ESTIMATE SET

HVAC CONTROLS

9.7.03

© 2020 DiNisco Design

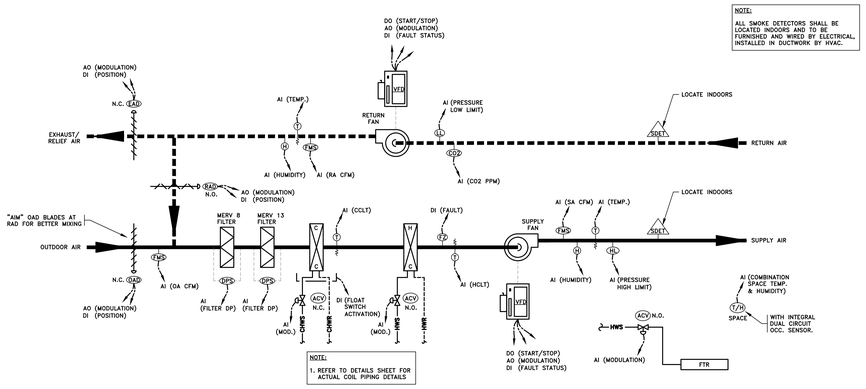

A. GENERAL

1. THIS IS A SINGLE-ZONE VAV SYSTEM.
2. THE HANDLING UNIT SHALL BE STARTED AND STOPPED VIA DEDICATED DDC CONTROLLER. COORDINATE OCCUPIED AND UNOCCUPIED SCHEDULES WITH OWNER. ALL SETPOINTS SHALL BE ADJUSTABLE. ALL ACTUATORS SHALL BE ELECTRONIC.
3. LOCAL HAND-OFF AUTOMATIC SWITCH (H-O-A) FOR FANS OR DISCONNECT SHALL OVERRIDE DDC START/STOP (S/S) COMMANDS. ALL HARDWIRED SAFETIES SHALL BE ACTIVE IN BOTH 'H' AND 'A' POSITIONS.
4. ALL TEMPERATURES LISTED ARE FAHRENHEIT.
5. ALL TEMPERATURE SENSORS IN THE UNIT AND DUCTWORK SHALL BE AVERAGING TYPE EXCEPT FREEZESTATS WHICH SHALL BE LOW POINT READING TYPE & REMOTELY RESETTABLE.
6. THE HEATING COIL ACV (IF APPLICABLE) SHALL BE CONTROLLED BY THE HEATING COIL LEAVING TEMPERATURE SENSOR (HCLT) TO MAINTAIN 50°F IN THE UNIT CASING.

B. FAN CONTROL (SINGLE ZONE VAV W/ RETURN FAN)

1. WHILE IN UNOCCUPIED MODE (OR OFF ON SAFETY MANUAL DISCONNECT) AHU SUPPLY AND RETURN FANS SHALL BE OFF WITH THE OUTSIDE AIR DAMPER (OAD), THE EXHAUST AIR DAMPER (EAD) AND THE CHILLED WATER ACV CLOSED, THE RETURN AIR DAMER (RAD) OPEN, AND THE HEATING COIL ACV CONTROLLED BY HEATING COIL LEAVING TEMPERATURE SENSOR (HCLT) TO MAINTAIN 50°F IN THE UNIT CASING.
2. WHEN STARTED IN OCCUPIED MODE, THE AHU FANS SHALL START IN RECIRCULATION MODE (100% RETURN AIR) AT MINIMUM SPEED WITH THE RETURN FAN STARTING FIRST BY TEN SECONDS.
3. THE SUPPLY FAN VFD SHALL SLOWLY INCREASE IN SPEED TO 25% AIRFLOW (COOLING) OR 50% AIRFLOW (HEATING). REFER TO OCCUPIED HEATING/COOLING SEQUENCES FOR FURTHER FAN CONTROLS.
4. THE RETURN FAN VFD SHALL TRACK THE SUPPLY FAN BY A FIXED DIFFERENTIAL AIRFLOW. THE DIFFERENTIAL AIRFLOW SHALL BE BASED ON THE RETURN AIRFLOW (AIRFLOW AT THE RETURN AIRFLOW MONITORING STATION) EQUALING THE SUPPLY AIRFLOW (BASED ON THE SUM OF ALL CONNECTED TERMINAL VOLUME BOXES) LESS THE ACTUAL MINIMUM OUTDOOR AIRFLOW (AT THE OUTDOOR AIRFLOW MONITORING STATION). DURING ECONOMIZER COOLING, THE RETURN FAN SHALL BE SET TO MAINTAIN SUPPLY AIRFLOW LESS SCHEDULED MINIMUM OUTDOOR AIR. DURING OPERATION IN RECIRCULATION MODE (SUCH AS START-UP, UNOCCUPIED, AND WARM-UP) THE DIFFERENTIAL AIRFLOW IS ZERO.
5. AFTER START-UP, ONCE FAN OPERATION IS STABLE, THE OAD AND RAD SHALL SLOWLY OPEN TO MINIMUM OUTDOOR AIR POSITION AS CONTROLLED BY THE OUTDOOR AIR FMS (SEE CO_2 CONTROL). HEATING COIL LEAVING AIR TEMPERATURE SENSOR (HCLT) SHALL ALWAYS MAINTAIN A MINIMUM OF 50°F BY MODULATING HEATING ACV.

C. OCCUPIED CARBON DIOXIDE CONTROL

1. THE ACTUAL MINIMUM AIRFLOW SHALL VARY BETWEEN 10% AND 100% OF THE SCHEDULED MINIMUM OUTDOOR AIR VOLUME. NORMAL MINIMUM OUTDOOR AIR (OA) QUANTITY SHALL BE CONTROLLED BY THE OUTDOOR AIR FMS TO 10% OF THE SCHEDULED MINIMUM OA. IF EITHER OF THE FOLLOWING OCCURS, THE OUTDOOR AIR FMS SHALL SLOWLY MODULATE THE OAD AND RAD AS REQUIRED TO MAINTAIN THE MAXIMUM CO_2 WITHIN 50 PPM OF THE LISTED LIMIT:
   a. IF ANY VARIABLE OCCUPANCY SPACE CO_2 SENSOR SERVED BY THE UNIT RISES ABOVE THE LIMIT OF 900 PPM FOR 5 MINUTES
   b. IF THE RETURN AIR CO_2 LEVEL AT SENSOR (C) RISES ABOVE THE LIMIT OF 750 PPM.
   c. OA SHALL NOT EXCEED SCHEDULED NORMAL OA LISTED ON THE SCHEDULE SHEET EXCEPT DURING ECONOMIZER OPERATION.

D. OCCUPIED HEATING CONTROL (HOT WATER)

1. THIS SYSTEM SHALL INITIALLY OPERATE AT 50% AIRFLOW, WITH HW ACV MODULATED TO MAINTAIN SPACE TEMPERATURE OF 70°F (ADJ). SUPPLY FAN SHALL MODULATE UP TO 100% AS REQUIRED IF SPACE TEMPERATURE IS NOT MET AFTER 15 MINUTES.
2. SPACES PROVIDED WITH AUXILIARY HEAT (SUCH AS FTR OR RADIANT PANELS) SHALL HAVE ITS ACV CONTROLLED BY THE SAME SIGNAL.

E. OCCUPIED COOLING CONTROL (CHILLED WATER)

1. CHW ACV MODULATED TO MAINTAIN DAT SET POINT AND SF MODULATED BETWEEN 25-100% TO MAINTAIN SPACE SET POINT. BELOW 25%, DAT RESET UP UNTIL COOLING SPACE SET POINT IS SATISFIED.
2. THE FIRST MEANS OF COOLING SHALL BE ACTIVATION OF THE ECONOMIZER. IF THE OUTSIDE AIR ENTHALPY IS BELOW THE ROOM ENTHALPY, THE OUTSIDE AND RETURN AIR DAMPERS SHALL BE PROPORTIONALLY MODULATED UP TO 100% OUTDOOR AIR TO MAINTAIN SPACE TEMPERATURE SETPOINT. DAT SHALL OVERRIDE, IF REQUIRED, TO LIMIT SUPPLY AIR TEMPERATURE TO 55°F MINIMUM DURING ECONOMIZER COOLING (LIMIT SHALL NOT RESULT IN REDUCTION OF THE MINIMUM OUTDOOR AIRFLOW). IF ADDITIONAL COOLING IS REQUIRED, THE CV SHALL MODULATE AS REQUIRED. THE REVERSE SHALL OCCUR ON A DROP IN SPACE TEMPERATURE BELOW COOLING SETPOINT.
3. IF THE OUTSIDE AIR ENTHALPY RISES ABOVE THE ROOM AIR ENTHALPY, THE ECONOMIZER SHALL BE POSITIONED TO PROVED MINIMUM OUTDOOR AIRFLOW AND THE CHW CV MODULATED TO MAINTAIN ROOM COOLING SETPOINT TEMPERATURE. DAT SHALL LIMIT SUPPLY AIR TO 50°F MINIMUM DURING MECHANICAL COOLING. HEATING ACV SHALL REMAIN CLOSED DURING COOLING.

F. UNOCCUPIED CONTROL

1. IF, WHEN THE UNIT IS OFF, THE ROOM TEMPERATURE FALLS BELOW 54°F, THE UNIT FANS SHALL START WITH RAD OPEN, EAD AND OAD CLOSED, THE DAT SHALL RESET HCLT TO SUPPLY 80°F AIR. WHEN ROOM TEMPERATURE RISES ABOVE 59°F, THE UNIT SHALL SHUT DOWN.
2. SPACES PROVIDED WITH FTR SHALL UTILIZE FTR AS PRIMARY MEANS OF HEATING & AHU SHALL BE USED AS SECONDARY STAGE HEATING.

G. WARM-UP/COOL-DOWN CONTROL

1. WARM-UP: DDC CONTROLLER SHALL PROVIDE OPTIMUM START CAPABILITY. IF SPACE TEMPERATURE IS BELOW 63°F, WARM-UP SHALL BE DONE. THE UNIT FANS SHALL START WITH RAD OPEN, EAD AND OAD CLOSED, AND DAT SHALL RESET HCLT TO SUPPLY 80°F AIR. WHEN ALL ROOM TEMPERATURES RISE ABOVE 69°F AND CLOCK INDICATES SCHEDULED OCCUPIED PERIOD, OCCUPIED MODE SHALL START.
2. COOL-DOWN: DDC CONTROLLER SHALL PROVIDE OPTIMUM START CAPABILITY. IF SPACE TEMPERATURE IS ABOVE 83°F, COOL-DOWN SHALL BE DONE. THE UNIT FANS SHALL START WITH RAD OPEN, EAD AND OAD CLOSED, AND DAT SHALL RESET CCLT TO SUPPLY 55°F AIR. WHEN ALL ROOM TEMPERATURES DROP BELOW 77°F AND CLOCK INDICATES SCHEDULED OCCUPIED PERIOD, OCCUPIED MODE SHALL START. ECONOMIZER SHALL BE AVAILABLE DURING COOL-DOWN MODE.

H. SAFETIES

1. UNIT SHALL SHUT DOWN IN EVENT WHEN ANY SMOKE DETECTOR OR FIRE ALARM CONDITION IS DETECTED.
2. ANY FREEZING CONDITION DETECTED WITHIN UNIT SHALL SHUT DOWN UNIT. OAD & EAD SHALL CLOSE, RAD SHALL OPEN, AND HW ACV (IF APPLICABLE) SHALL FULLY OPEN.
3. FREEZESTAT SHALL BE AUTO-RESET TYPE AND SHALL ONLY SHUT DOWN UNIT AFTER 15 MINUTES OF CONTINUOUS ACTIVATION. FREEZESTAT SHALL SEND ALARM TO FRONT END UPON INITIAL ACTIVATION AND SHALL BE REMOTELY RESETTABLE.
4. WHEN SA & RA DPT INDICATES DUCT OVER OR UNDER PRESSURE.

I. ALARMS

1. ANY SAFETY LISTED ABOVE.
2. FAILURE OF ANY UNIT COMPONENTS.
3. WHEN ACTUAL TEMPERATURE, RH, DPT, OR FLOW DEVIATES FROM SET POINT OR INTENDED RESET PARAMETERS.
4. IF FILTER PRESSURE DROP EXCEEDS THE PREDETERMINED SET POINT. VALUE FOR MERV 8 FILTERS IS 0.6" WG AND VALUE FOR MERV 13 FILTERS IS 1.2" WG.
5. ALARM MESSAGE SHALL BE DETAILED WITH SPECIFIC UNIT TAG NUMBER, COMPONENT IDENTIFICATION, AND EXACT NATURE.
6. LEVEL OF ALARM STATUS SHALL BE AS DIRECTED BY OWNER.

J. STAND-BY POWER

1. THIS AHU IS CONNECTED TO STAND-BY POWER. PROVIDE AUTOMATIC RESTART SEQUENCE UPON POWER FAILURE AND SWITCH TO STAND-BY POWER AND UPON RETURN TO NORMAL POWER. FANS SHALL OPERATE AT 50% SPEED WHEN ON STAND-BY POWER.

A AHU-1, 2, 3 CONTROL DIAGRAM AND SEQUENCE
NOT TO SCALE

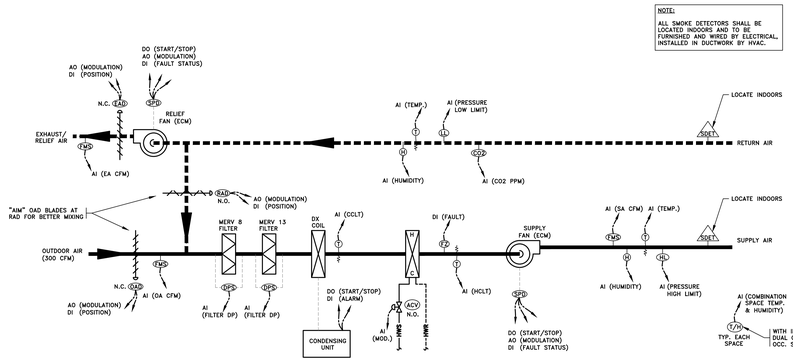

A. GENERAL

1. THIS IS A MULTI-ZONE VAV SYSTEM.
2. ROOFTOP UNIT SHALL BE STARTED AND STOPPED VIA DDC CONTROLLER. COORDINATE OCCUPIED AND UNOCCUPIED SCHEDULES WITH OWNER. ALL SETPOINTS SHALL BE ADJUSTABLE. ALL ACTUATORS SHALL BE ELECTRONIC.
3. LOCAL HAND-OFF AUTOMATIC SWITCH (H-O-A) FOR FANS SHALL OVERRIDE DDC START/STOP (S/S) COMMANDS. ALL HARDWIRED SAFETIES SHALL BE ACTIVE IN BOTH 'H' AND 'A' POSITIONS.
4. ALL TEMPERATURES LISTED ARE FAHRENHEIT.
5. ALL TEMPERATURE SENSORS IN THE UNIT AND DUCTWORK SHALL BE AVERAGING TYPE EXCEPT FREEZESTATS WHICH SHALL BE LOW POINT READING TYPE & REMOTELY RESETTABLE.
6. THE HEATING COIL ACV (IF APPLICABLE) SHALL BE CONTROLLED BY THE HEATING COIL LEAVING TEMPERATURE SENSOR (HCLT) TO MAINTAIN 50°F IN THE UNIT CASING.
7. PROVIDE APPROPRIATE ANTI-RECYCLE TIME DELAYS AND SAFETIES ON COMPRESSOR AS REQUIRED BY MANUFACTURER.

B. FAN CONTROL (W/ RELIEF FAN)

2. WHILE IN UNOCCUPIED MODE (OR OFF ON SAFETY MANUAL DISCONNECT) RTU SHALL BE OFF WITH THE OUTSIDE AIR DAMPER (OAD) CLOSED, THE EXHAUST AIR DAMPER (EAD) CLOSED, THE CONDENSING UNIT OFF, AND THE RETURN AIR DAMPER (RAD) OPEN.
3. WHEN STARTED IN OCCUPIED MODE, THE SUPPLY FAN SHALL START IN RECIRCULATION MODE, THEN THE OAD AND RAD SHALL SLOWLY OPEN TO THE MINIMUM OUTDOOR AIR POSITION AS CONTROLLED BY AIR FLOW MONITORING STATION (AFMS -- SEE CO_2 CONTROL). THE EAD SHALL OPEN, AND THE RTU FANS SHALL START).
4. SUPPLY FAN SHALL MODULATE TO MAINTAIN DISCHARGE SET POINT AS SENSED BY DIFFERENTIAL PRESSURE SENSOR. SUPPLY FAN SHALL ALWAYS MAINTAIN THE MINIMUM CFM REQUIRED BY THE MANUFACTURER. THE BMS SHALL CONTINUOUSLY SUM THE CFM OF THE ASSOCIATED VAV BOXES. WHEN SUPPLY FAN IS OPERATING, VAV BOXES SHALL ENSURE MINIMUM CFM IS MAINTAINED AS REQUIRED BY MANUFACTURER.
5. THE EXHAUST FAN VFD SHALL MODULATE TO MAINTAIN +0.05" w.c. IN SPACE. DURING OPERATION IN RECIRCULATION MODE (SUCH AS START-UP, UNOCCUPIED, AND WARM-UP), EXHAUST FAN SHALL REMAIN OFF.

C. OCCUPIED CARBON DIOXIDE CONTROL

1. THE ACTUAL MINIMUM AIRFLOW SHALL VARY BETWEEN 40% AND 100% OF THE SCHEDULED OUTDOOR AIR VOLUME. NORMAL MINIMUM OUTDOOR AIR (OA) QUANTITY SHALL BE CONTROLLED BY THE AFMS TO 40% OF THE SCHEDULED OA VOLUME. IF EITHER OF THE FOLLOWING OCCURS, THE OUTDOOR AIR AFMS SHALL SLOWLY MODULATE THE OAD AND RAD AS REQUIRED TO MAINTAIN THE MAXIMUM CO_2 WITHIN 50 PPM OF THE LISTED LIMIT:
   a. IF ANY VARIABLE OCCUPANCY SPACE CO_2 SENSOR SERVED BY THE UNIT RISES ABOVE THE LIMIT OF 900 PPM FOR 5 MINUTES
   b. IF THE RETURN AIR CO_2 LEVEL AT SENSOR (C) RISES ABOVE THE LIMIT OF 750 PPM.
   c. OA SHALL NOT EXCEED SCHEDULED NORMAL OA LISTED ON THE SCHEDULE SHEET EXCEPT DURING ECONOMIZER OPERATION.

D. OCCUPIED COOLING CONTROL (DX)

1. UPON A RISE IN DISCHARGE AIR TEMPERATURE ABOVE THE SETPOINT OF 55°F, THE COOLING CYCLE SHALL BE ACTIVATED.
2. THE FIRST MEANS OF COOLING SHALL BE ACTIVATION OF THE ECONOMIZER. IF THE OUTSIDE AIR ENTHALPY IS BELOW THE ROOM ENTHALPY, THE OUTSIDE AND RETURN AIR DAMPERS SHALL BE PROPORTIONALLY MODULATED UP TO 100% OUTDOOR AIR TO MAINTAIN SPACE TEMPERATURE SETPOINT. DAT SHALL OVERRIDE, IF REQUIRED, TO LIMIT SUPPLY AIR TEMPERATURE TO 55°F MINIMUM DURING ECONOMIZER COOLING (LIMIT SHALL NOT RESULT IN REDUCTION OF THE MINIMUM OUTDOOR AIRFLOW). IF ADDITIONAL COOLING IS REQUIRED, THE CONDENSING UNIT'S COMPRESSORS SHALL BE STAGED ON AS REQUIRED. FOR LOW LOAD OPERATION, HGBP (OR DIGITAL SCROLL COMPRESSOR) SHALL BE USED. THE REVERSE SHALL OCCUR ON A DROP IN SPACE TEMPERATURE BELOW COOLING SETPOINT.
3. IF THE OUTSIDE AIR ENTHALPY RISES ABOVE THE ROOM AIR ENTHALPY THE ECONOMIZER SHALL BE POSITIONED TO PROVED MINIMUM OUTDOOR AIRFLOW AND THE CONDENSING UNIT STAGED TO MAINTAIN DISCHARGE AIR SETPOINT TEMPERATURE. DAT SHALL LIMIT SUPPLY AIR TO 48°F MINIMUM, DURING MECHANICAL COOLING.

E. OCCUPIED HEATING CONTROL (HOT WATER)

1. UPON A DROP IN DISCHARGE AIR TEMPERATURE BELOW THE SETPOINT OF 55°F, DISCHARGE AIR TEMPERATURE SENSOR (DAT) SHALL RESET HCLT AS REQUIRED TO MAINTAIN HEATING SETPOINT TEMPERATURE. THE REVERSE SHALL OCCUR ON A RISE ABOVE HEATING SETPOINT.
2. ZONE HEATING SHALL BE ACHIEVED BY THE SPACE VAV BOXES & FTR, IF APPLICABLE. REFER TO SEPARATE VAV BOX SEQUENCE OF OPERATION. SPACES PROVIDED WITH FTR SHALL HAVE ITS ACV CONTROLLED BY THE SAME SIGNAL.

F. UNOCCUPIED CONTROL

4. HEATING:

   SETBACK SET POINT SHALL BE 55°F. UNIT REMAINS OFF UNTIL AVERAGE INSIDE TEMPERATURE FALLS TO 54°F OR IF ANY (1) SPACE DROPS BELOW 45°F, WITH OAD CLOSED, EAD CLOSED, RAD OPEN, UNIT OPERATES CONTINUOUSLY IN 100% RECIRCULATION MODE AND MODULATES TO MAINTAIN DISCHARGE SET POINT AS SEEN AT DPT. REFER TO VAV BOX SEQUENCE OF OPERATION FOR UNOCCUPIED SPACE HEATING SEQUENCE. ONCE ALL SPACES REACH 59°F, UNIT SHALL SHUT DOWN W/ EAD & OAD FULLY CLOSED.

5. COOLING:

   THERE SHALL BE NO UNOCCUPIED COOLING.

6. BUTTON ON SPACE SENSOR SHALL ALLOW 2-HOUR OVERRIDE FROM UNOCCUPIED TO OCCUPIED CONTROL. DURING OVERRIDE, SYSTEM SHALL ENSURE THAT ENOUGH VAV BOXES ARE OPEN TO MAINTAIN UNIT'S MINIMUM FLOW.

G. WARM-UP/COOL-DOWN CONTROL

1. WARM-UP: DDC CONTROLLER SHALL PROVIDE OPTIMUM START CAPABILITY. IF SPACE TEMPERATURE IS BELOW 63°F, WARM-UP SHALL BE DONE WITH RAD OPEN, OAD CLOSED, AND UNIT SHALL SUPPLY 80°F AIR. WHEN RA TEMPERATURE RISES ABOVE 69°F, OCCUPIED MODE SHALL START.
2. COOL-DOWN: DDC CONTROLLER SHALL PROVIDE OPTIMUM START CAPABILITY. IF SPACE TEMPERATURE IS ABOVE 83°F, COOL-DOWN SHALL BE DONE WITH RAD OPEN, OAD CLOSED, AND UNIT SHALL SUPPLY 55°F AIR. WHEN RA TEMPERATURE DROPS BELOW 77°F, OCCUPIED MODE SHALL START. ECONOMIZER SHALL BE AVAILABLE DURING COOL-DOWN MODE.

H. SAFETIES

1. UNIT SHALL SHUT DOWN IN EVENT WHEN ANY SMOKE DETECTOR OR FIRE ALARM CONDITION IS DETECTED.
2. ANY FREEZING CONDITION DETECTED WITHIN UNIT SHALL SHUT DOWN UNIT. OAD & EAD SHALL CLOSE, RAD SHALL OPEN, AND HW ACV (IF APPLICABLE) SHALL FULLY OPEN.
3. FREEZESTAT SHALL BE AUTO-RESET TYPE AND SHALL ONLY SHUT DOWN UNIT AFTER 15 MINUTES OF CONTINUOUS ACTIVATION. FREEZESTAT SHALL SEND ALARM TO FRONT END UPON INITIAL ACTIVATION AND SHALL BE REMOTELY RESETTABLE.
4. WHEN SA & RA DPT INDICATES DUCT OVER OR UNDER PRESSURE.

I. ALARMS

1. ANY SAFETY LISTED ABOVE.
2. FAILURE OF ANY UNIT COMPONENTS.
3. WHEN ACTUAL TEMPERATURE, RH, DPT, OR FLOW DEVIATES FROM SET POINT OR INTENDED RESET PARAMETERS.
4. IF FILTER PRESSURE DROP EXCEEDS THE PREDETERMINED SET POINT. VALUE FOR MERV 8 FILTERS IS 0.6" WG AND VALUE FOR MERV 13 FILTERS IS 1.2" WG.
5. ALARM MESSAGE SHALL BE DETAILED WITH SPECIFIC UNIT TAG NUMBER, COMPONENT IDENTIFICATION, AND EXACT NATURE.
6. LEVEL OF ALARM STATUS SHALL BE AS DIRECTED BY OWNER.

J. STAND-BY POWER

1. THIS RTU IS CONNECTED TO STAND-BY POWER. PROVIDE AUTOMATIC RESTART SEQUENCE UPON POWER FAILURE AND SWITCH TO STAND-BY POWER AND UPON RETURN TO NORMAL POWER. FANS SHALL OPERATE AT 50% SPEED WHEN ON STAND-BY POWER.

B RTU-1 CONTROL DIAGRAM AND SEQUENCE
NOT TO SCALE

AMESBURY ELEMENTARY SCHOOL

AMESBURY, MA

DINISCO DESIGN
architects + planners
99 Chauncy Street, Suite 901
Boston, MA 02111
(617) 426-2858

DGT Associates
Surveying & Engineers
1071 Worcester Road
Framingham, MA 01701
(508) 879-0030

Brown Sardina, Inc.
Landscape Architects
24 Roland Street
Boston, MA 02129
(617) 482-4703

Foley Buhl Roberts & Assoc., Inc.
Structural Engineers
2150 Washington Street
Newton, MA 02462
(617) 527-9600

Crabtree McGrath Assoc., Inc.
Food Service Consultants
161 West Main Street
Georgetown, MA 01833
(978) 352-8500

VAV International, Inc.
Mechanical Engineers
400 West Cummings Park S. 4700
Woburn, MA 01801
(781) 935-7228

Thompson Engineering Company, Inc.
Electrical Engineers
89 Newbury Street, Suite 103
Danvers, MA 01923
(617) 866-9066

EdVance Technology Design, Inc.
Technology Consultants
300 Brickstone Square, Suite 201
Andover, MA 01880
(978) 256-9900

KEY PLAN

N
Called North

NORTH ARROW | STAMP

Date: 21 August 2020

Drawn By: JH

Scale: NONE

Revisions

Number	Date	Description

90% COST ESTIMATE SET

HVAC CONTROLS

9.7.04

© 2020 DiNisco Design

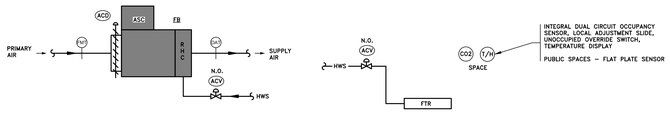

A. GENERAL

1. VAV BOX SHALL BE CONTROLLED BY AN APPLICATION SPECIFIC CONTROLLER (ASC). COORDINATE OCCUPIED/UNOCCUPIED SCHEDULES WITH OWNER. ALL SETPOINTS SHALL BE ADJUSTABLE. ALL ACTUATORS SHALL BE ELECTRONIC.
2. ALL TEMPERATURES LISTED ARE FAHRENHEIT AND SHALL BE ADJUSTABLE.
3. AIRFLOW SHALL BE MEASURED BY THE FLOW MEASURING TRANSMITTER (FMT) AND DISPLAYED ON THE GRAPHICS
4. OCCUPIED HEATING SETPOINT SHALL BE 70°F. OCCUPIED COOLING SETPOINT SHALL BE 5°F WARMER THAN HEATING SETPOINT.
5. ROOM TEMPERATURES SHALL BE SET BY THE BUILDING AUTOMATION SYSTEM (BAS) AND CAPABLE OF LOCAL +/- 2°F ADJUSTMENT (ADJ.) AS PROGRAMMED.
6. MINIMUM AND MAXIMUM PRIMARY AIRFLOWS ARE SHOWN ON DRAWINGS.
7. THE BMS SHALL CONTINUOUSLY SUM THE CFM OF THE AHU'S ASSOCIATED VAV BOXES. WHEN SUPPLY FAN IS OPERATING, VAV BOXES SHALL ENSURE MINIMUM CFM IS MAINTAINED AS REQUIRED BY MANUFACTURER.

B. OCCUPIED CO2 CONTROL

1. WHEN CO2 LEVEL AT SENSOR (C) RISES ABOVE 1,000 PPM THE CONTROLLER SHALL OVERRIDE THE COOLING SIGNAL TO THE PAD TO INCREASE PRIMARY AIR (UP TO MAXIMUM AIRFLOW) AS REQUIRED TO MAINTAIN THE CO2 LEVEL AT 850 PPM (ADJ.).
2. IF THE PAD IS AT MAXIMUM AIRFLOW AND THE CO2 LEVEL RISES ABOVE 900 PPM FOR 5 MINUTES, THEN THE OA DAMPER ON THE ASSOCIATED INTERLOCKED AIR HANDLER SHALL MODULATE TO PROVIDE MORE OA AS REQUIRED TO MAINTAIN A MAXIMUM ROOM CO2 LEVEL OF 900 PPM (SEE THE ASSOCIATED AIR HANDLER CONTROLS), BUT NOT MORE THAN THE SCHEDULED MIN. OA CFM EXCEPT DURING ECONOMIZER MODE. THIS SEQUENCE SHALL BE REVERSIBLE. THE DDC SHALL GIVE A DETAIL SIGNAL TO THE FRONT END INDICATING THAT THIS OVERRIDE HAS OCCURRED.

C. OCCUPIED HEATING CONTROL

1. UPON A CALL FOR HEATING FROM THE ROOM TEMPERATURE SENSOR, THE PRIMARY AIR ACD SHALL MODULATE TO ITS 40% AIRFLOW AND THE HOT WATER HEATING COIL ACV SHALL MODULATE AS REQUIRED TO MAINTAIN THE HEATING SETPOINT OF 70°F (ADJ.). IF HEATING SETPOINT IS NOT SATISFIED WITHIN 10 MINUTES (ADJ.) INCREASE ACD POSITION IN 10% AIRFLOW INCREMENTS EVERY 10 MINUTES (ADJ.) UP TO 100% AIRFLOW UNTIL HEATING SETPOINT IS ACHIEVED. THE REVERSE SHALL OCCUR ON A RISE IN SPACE TEMPERATURE.
2. IN SPACES PROVIDED WITH FTR, FTR ACV REMAINS CLOSED UNTIL OAT FALLS BELOW 30°F, AT WHICH POINT FTR ACV & VAV ACV SHALL MODULATE IN PARALLEL TO MAINTAIN HEATING SETPOINT.

D. OCCUPIED COOLING CONTROL

1. UPON A CALL FOR COOLING FROM THE ROOM TEMPERATURE SENSOR, THE PRIMARY AIR ACD SHALL MODULATE BETWEEN MINIMUM AND MAXIMUM AIRFLOWS AS REQUIRED TO MAINTAIN THE COOLING SETPOINT. THE HEATING ACV SHALL BE CLOSED.

E. UNOCCUPIED HEATING CONTROL

1. IF, WHEN THE UNIT IS OFF, (3) SPACE TEMPERATURES FALL BELOW 58°F, OR IF (1) SPACE FALLS BELOW 45°F, THE ASSOCIATED AIR HANDLER SHALL START IN UNOCCUPIED MODE, ALL VAV BOXES SHALL OPEN TO 40% AIRFLOW AND THE HOT WATER ACV SHALL MODULATE AS REQUIRED TO MAINTAIN SPACE TEMPERATURE OF 60°F. WHEN EACH ROOM TEMPERATURE RISES ABOVE 60°F, THE ASSOCIATED AIR HANDLER SHALL SHUT DOWN. SPACES PROVIDED WITH FTR SHALL UTILIZE FTR AS PRIMARY MEANS OF HEATING & VAV BOX SHALL BE USED AS SECONDARY STAGE.
2. THERE SHALL BE NO UNOCCUPIED COOLING.

F. UNOCCUPIED OVERRIDE

1. BUTTON ON TR SHALL ALLOW 2-HOUR (ADJ) OVERRIDE FROM UNOCCUPIED TO OCCUPIED CONTROL. WHEN ANY ROOM IS IN THIS OVERRIDE, THE DDC SYSTEM SHALL ENSURE THAT ENOUGH "UNOCCUPIED" ZONES ARE ALSO OVERRIDDEN SO THAT THE ASSOCIATED AIR HANDLER CAN OPERATE AT MINIMUM AIRFLOW IN THIS MODE.

G. WARM-UP CONTROL

1. PROVIDE OPTIMUM START CAPABILITY. IF ROOM TEMPERATURE IS BELOW 65°F, WARM-UP SHALL BE DONE WITH PAD OPEN TO MINIMUM AIRFLOW AND HEATING CONTROL VALVE (HV) MODULATING TO MAINTAIN A DISCHARGE AIR TEMPERATURE (DAT) OF 90°F. WHEN ALL ROOM TEMPERATURES RISE ABOVE 69°F, OCCUPIED MODE SHALL START.

H. SAFETIES

1. WHEN THE ASSOCIATED INTERLOCKED AIR HANDLER SMOKE DETECTOR (SDET) IS ACTIVATED, THE BOX SHALL CLOSE UNTIL THE AIR HANDLER IS RESET.

I. ALARMS

1. IF, DURING OCCUPIED MODE, THE ROOM TEMPERATURE SENSOR (TR) SENSES A TEMPERATURE MORE THAN 5°F ABOVE OR BELOW THE SETPOINT FOR 5 MINUTES, OR BELOW 50°F DURING UNOCCUPIED CONTROL, THE DDC SYSTEM SHALL GIVE A DETAIL ROOM "HIGH" OR "LOW" TEMPERATURE ALARM SIGNAL.

A VAV BOX WITH HOT WATER HEATING CONTROL SEQUENCE

NOT TO SCALE

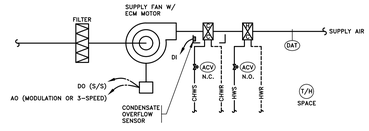

A. GENERAL

1. THE FAN COIL UNIT SHALL BE CONTROLLED VIA NEW DDC CONTROLLER. COORDINATE OCCUPIED/UNOCCUPIED SCHEDULES WITH OWNER. ALL SET POINTS SHALL BE ADJUSTABLE.
2. REFER TO PLANS AND SPECIFICATIONS FOR ATC POWER FEED LOCATIONS. PROVIDED REQUIRED TRANSFORMER TO REDUCED 120 VOLT POWER TO LOW VOLTAGE.
3. PROVIDE OPTIMAL START PROGRAMMING/PACKAGE TO TRACK OCCUPIED/UNOCCUPIED MODES FOR MORNING WARM-UP.

B. FAN CONTROL

1. WHILE IN OCCUPIED MODE, THE SUPPLY FAN SHALL RUN CONTINUOUSLY.
2. WHILE IN THE UNOCCUPIED MODE, THE SUPPLY FAN SHALL BE OFF UNTIL SPACE CALLS FOR HEAT.
3. FAN SHALL ENERGIZE ON LOW SPEED. IF THE SETPOINT IS NOT MET AFTER 15 MINUTES. THE FAN SHALL RAMP UP TO MEDIUM SPEED. THE SETPOINT IS STILL NOT MET AFTER 15 MINUTES, THE FAN SHALL RAMP UP TO HIGH SPEED. FAN SPEED SHALL BE REMOTELY CONTROLLED BY BAS.

C. OCCUPIED COOLING CONTROL

1. UPON A CALL FOR COOLING (75°F ADJ.) FROM THE SPACE TEMPERATURE SENSOR. CHILLED WATER ACV SHALL MODULATE AS REQUIRED TO MAINTAIN SETPOINT.

D. UNOCCUPIED COOLING CONTROL

1. THERE SHALL BE NO UNOCCUPIED COOLING.

E. OCCUPIED HEATING CONTROL

1. UPON A CALL FOR HEATING (70°F ADJ.) FROM THE SPACE TEMPERATURE SENSOR, HOT WATER ACV SHALL MODULATE AS REQUIRED TO MAINTAIN SETPOINT.

F. UNOCCUPIED HEATING CONTROL

1. UPON A CALL FOR HEAT (BELOW 60°F ADJ.) FAN SHALL BE ENERGIZED AND HW ACV SHALL MODULATE OPEN. ON A RISE TO 65°F (ADJ) ACV SHALL MODULATE CLOSED.

G. SAFETIES

1. UNIT MOUNTED DISCHARGED AIR TEMPERATURE SENSOR (DAT) SHALL LIMIT THE HEATING DISCHARGE AIR TEMPERATURE TO A MAXIMUM OF 95°F (ADJ.). COOLING DISCHARGED AIR TEMPERATURE SHALL BE NO LOWER THAN 53°F (ADJ).

H. ALARMS

1. IF THE SUPPLY FAN FAILS OR ANY SAFETY IS TRIPPED, THE AUTOMATIC TEMPERATURE CONTROL SYSTEM SHALL GIVE A DETAILED ALARM SIGNAL TO THE FRONT END.

I. OVERRIDE DURING UNOCCUPIED MODE

1. THE PUSH BUTTON ON THE SPACE TEMPERATURE SENOR SHALL OVERRIDE THE UNOCCUPIED MODE AND FOLLOW THE OCCUPIED MODE FOR 2 HOURS (ADJ) AND THEN RETURN TO THE UNOCCUPIED MODE.

B FAN COIL UNIT CONTROL SEQUENCE

NOT TO SCALE

NOTE:
STAGGER START SEQUENCING OF ALL HVAC EQUIPMENT TO LIMIT DEMAND LOAD UPON START-UP.

NOTE:
ALL APPURTENANCES (EQUIPMENT, SENSORS, ETC.) SHOWN ON CONTROLS DIAGRAMS SHALL BE THE RESPONSIBILITY OF THE MECHANICAL SUB-CONTRACTOR, REGARDLESS OF WHETHER OR NOT THE EQUIPMENT IS SHOWN OR INDICATED ON THE SCHEDULE SHEETS OR IN THE SPECIFICATIONS.

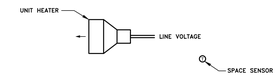

A. GENERAL

1. THE ELECTRIC UNIT HEATER SHALL BE CONTROLLED BY DDC TO MAINTAIN SPACE SETPOINT. THE SEQUENCE LISTED BELOW IS REVERSIBLE UNLESS NOTED OTHERWISE.
2. THE ELECTRIC UNIT HEATER'S SUPPLY FAN SHALL BE DE-ENERGIZED. UPON A CALL FOR HEAT, THE HEATER'S SUPPLY FAN AND STAGES OF ELECTRIC HEAT SHALL BE ENERGIZED AS REQUIRED TO MAINTAIN THE SPACE TEMPERATURE SETPOINT (70°F OCCUPIED, 55°F UNOCCUPIED).

C ELECTRIC HEATERS CONTROL SEQUENCES

NOT TO SCALE

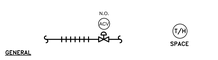

A. GENERAL

1. RADIANT HEAT OR FINTUBE RADIATION SHALL BE CONTROLLED VIA NEW DDC CONTROLLER AND AUTOMATIC TEMPERATURE CONTROL SYSTEM. COORDINATE OCCUPIED/UNOCCUPIED SCHEDULES OWNER. ALL SETPOINTS SHALL BE ADJUSTABLE. ALL ACTUATORS SHALL BE ELECTRIC.

B. OCCUPIED HEATING CONTROL

1. UPON A CALL FOR HEATING FROM THE SPACE TEMPERATURE SENSOR, THE TWO WAY HEATING CONTROL VALVE (HV) SHALL MODULATE OPEN AS REQUIRED TO MAINTAIN THE SPACE TEMPERATURE SETPOINT, 70°F (ADJ.).

C. UNOCCUPIED HEATING CONTROL

1. THE TWO WAY HEATING CONTROL VALVE (HV) SHALL BE CLOSED. WHEN THE SPACE TEMPERATURE DROPS BELOW 55°F (ADJ.), THE TWO WAY HEATING CONTROL VALVE (HV) SHALL OPEN. WHEN THE SPACE TEMPERATURE RISES ABOVE 60°F (ADJ.) THE TWO WAY HEATING CONTROL VALVE (HV) SHALL BE CLOSED.

D CONVECTOR RADIATION CONTROL SEQUENCES

NOT TO SCALE

NOTE:
SUMP PUMP CONTROLS SHALL BE BY PLUMBER. BMS TO MONITOR STATUS OF PUMP AND HIGH LEVEL ALARM.

F ELEVATOR MACHINE ROOM SUMP PUMP

NOT TO SCALE

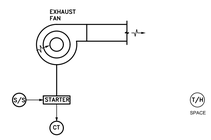

A. GENERAL

1. FAN SYSTEM SHALL BE CONTROLLED BY THE DDC SYSTEM.
2. ON RISE OF SPACE TEMPERATURE ABOVE 85°F (ADJ.), EXHAUST FAN SHALL START. ON DROP OF TEMPERATURE OF 5°F (ADJ.), FAN SHALL STOP.
4. PROVIDE FAN FAILURE ALARM (CT) AND HIGH TEMP ALARM AT 104°F (FOR 10 MINUTES).

G EE ROOM EXHAUST FAN (EF-3) SEQUENCE OF OPERATION

NOT TO SCALE

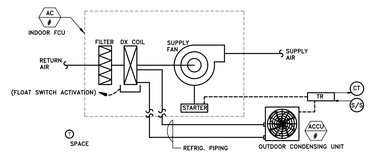

GENERAL

1. UNIT SHALL BE CONTROLLED VIA THE MANUFACTURER'S PACKAGED CONTROL SYSTEM, BUT FULLY INTEGRATED TO BMS.
2. WIRE AND TEST UNIT MANUFACTURER'S CONTROLS.
3. SPACE SETPOINTS SHALL BE DEFINED BY BMS. LOCAL SETPOINT CONTROL ON T'STATS SHALL BE LOCKED OUT.
4. INDOOR UNITS SHALL CONTROL TO SPACE TEMPERATURE AS MEASURED FROM THE LOCAL T'STAT, NOT FROM THE RETURN AIR SENSOR IN UNIT.
5. SPACE TEMPERATURE SHALL BE MONITORED BY BMS.

OCCUPIED COOLING CONTROL

1. UPON A RISE IN ROOM TEMPERATURE ABOVE THE ADJUSTABLE ROOM OCCUPIED COOLING SETPOINT THE INDOOR AND OUTDOOR UNIT SHALL BE ENERGIZED TO MAINTAIN THE SETPOINT (OCCUPIED COOLING SETPOINT TO BE 75°F.

OCCUPIED HEATING CONTROL

1. UPON A DROP IN ROOM TEMPERATURE BELOW THE ADJUSTABLE ROOM OCCUPIED HEATING SETPOINT THE INDOOR AND OUTDOOR UNIT SHALL BE ENERGIZED TO MAINTAIN THE SETPOINT (OCCUPIED HEATING SETPOINT TO BE 70°F.

ALARMS

1. SPACE TEMPERATURE HIGH LIMIT (80°F)
2. SPACE TEMPERATURE LOW LIMIT (50°F)
3. FAULT STATUS (INCLUDING FLOAT SWITCH ACTIVATION). ALL ALARMS SHALL BE UNIQUELY IDENTIFIABLE TO THE EQUIPMENT. GENERAL ALARMS OR CODES ARE NOT ACCEPTABLE.

H SPLIT SYSTEM AIR CONDITIONER CONTROL SEQUENCE

NOT TO SCALE

AMESBURY ELEMENTARY SCHOOL

AMESBURY, MA

DINISCO DESIGN architects + planners
99 Chauncy Street, Suite 901
Boston, MA 02111
(617) 426-2858

DGT Associates
Surveying & Engineers
1071 Worcester Road
Framingham, MA 01701
(508) 879-0030

Brown Sardina, Inc.
Landscape Architects
24 Roland Street
Boston, MA 02129
(617) 482-4703

Foley Buhl Roberts & Assoc., Inc.
Structural Engineers
2150 Washington Street
Newton, MA 02462
(617) 527-9600

Crabtree McGrath Assoc., Inc.
Food Service Consultants
161 West Main Street
Georgetown, MA 01833
(978) 352-8500

VAV International, Inc.
Mechanical Engineers
400 West Cummings Park S. 4700
Woburn, MA 01801
(781) 935-7228

Thompson Engineering Company, Inc.
Electrical Engineers
89 Newbury Street, Suite 103
Danvers, MA 01923
(617) 866-9066

EdVance Technology Design, Inc.
Technology Consultants
300 Brickstone Square, Suite 201
Andover, MA 01880
(978) 256-9900

KEY PLAN

NORTH ARROW — STAMP

Date: 21 August 2020

Drawn By: JH

Scale: NONE

Revisions

Number	Date	Description

90% COST ESTIMATE SET

HVAC CONTROLS

9.7.05

© 2020 DiNisco Design

A. GENERAL

1. THE BAS SHALL CONTROL THE OPERATION OF THE CEILING INDUCTION UNITS. THE OCCUPIED AND UNOCCUPIED TEMPERATURE AND SCHEDULE SHALL BE INITIALLY SET BY THE SYSTEM OPERATOR 75°F OCCUPIED COOLING, NO UNOCCUPIED COOLING, 70°F OCCUPIED HEATING AND 55°F UNOCCUPIED HEATING. ALL TEMPERATURES ARE ADJUSTABLE.
2. THE DEDICATED OUTSIDE AIR UNIT SHALL SUPPLY THE INDUCTION UNIT WITH 52°F SUPPLY AIR DURING THE HEATING SEASON AND 51°F SUPPLY AIR DURING THE COOLING SEASON.
3. DURING COOLING SEASON, WHEN THE ROOM TEMPERATURE SENSOR IS INDEXED TO COOLING, THE ACV SHALL MODULATE AS REQUIRED TO MAINTAIN COOLING SETPOINT OF 75°F. FTM ACV REMAINS CLOSED.
4. DURING HEATING SEASON, WHEN THE ROOM TEMPERATURE SENSOR IS INDEXED TO HEATING, THE ACV SHALL MODULATE AS REQUIRED TO MAINTAIN HEATING SETPOINT OF 70°F.
5. THERE SHALL BE A MINIMUM OF 5°F DEADBAND BETWEEN HEATING AND COOLING SETPOINTS (INITIALLY 70-75°F).
6. BMS SHALL CONTINUOUSLY CALCULATE DEWPOINT OF THE SPACE BASED ON THE SPACE TEMPERATURE/HUMIDITY SENSOR. IF SPACE DEWPOINT RISES TO 2°F OF INDUCTION CIRCUIT CHWS TEMPERATURE, ALARM STATUS RAISED. IF SPACE DEWPOINT RISES UP TO CHWS TEMPERATURE, CHW ACV SHALL CLOSE. REVERSE WILL APPLY.
7. A SINGLE TEMPERATURE SENSOR CAN CONTROL MORE THAN ONE UNIT PROVIDED IT IS IN THE SAME ZONE.
8. IF ASSOCIATED ERU IS OFF, CHW VALVES SHALL BE CLOSED. PRIOR TO CHW PUMPS BEING STARTED, CHW VALVES SHALL BE OPEN.

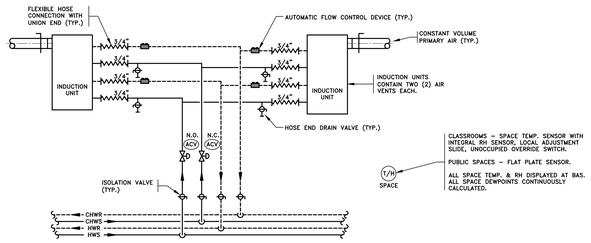

A CHILLED BEAM CONTROL SEQUENCES
NOT TO SCALE

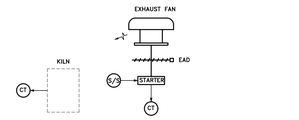

A. GENERAL

1. THE EXHAUST FAN SHALL BE INTERLOCKED WITH THE KILN.
2. WHEN THE KILN IS IN OPERATION, THE EAD SHALL OPEN AND THE EXHAUST FAN SHALL BE ENERGIZED AND RUN CONTINUOUSLY.
3. WHEN THE KILN IS SHUT-OFF, THE FAN SHALL CONTINUE TO RUN FOR 15 MINUTES (ADJ.). AFTER 15 MINUTES, THE EXHAUST FAN SHALL BE DE-ENERGIZED AND THE EAD SHALL CLOSE.

NOTE: KILN EXHAUST FAN SHALL BE PROVIDED WITH A SPEED CONTROLLER FOR FAN MODULATION.

B KILN EXHAUST FAN (EF-2) SEQUENCE OF OPERATION
NOT TO SCALE

A. GENERAL

1. THE EXHAUST FANS SHALL BE CONTROLLED BY THE BMS. COORDINATE OCCUPIED/UNOCCUPIED SCHEDULE W/ BUILDING OWNER.
2. CURRENT TRANSDUCER SHALL REPORT STATUS BACK TO BMS.

B. OCCUPIED HOURS:

1. EAD'S SHALL OPEN, THE EXHAUST FAN SHALL BE ENERGIZED AND RUN CONTINUOUSLY.

C. UNOCCUPIED HOURS:

1. THE EXHAUST FAN SHALL BE DE-ENERGIZED, EAD SHALL CLOSE.

C TOILET EXHAUST FAN (EF-1) SEQUENCE OF OPERATION
NOT TO SCALE

AMESBURY ELEMENTARY SCHOOL

AMESBURY, MA

DINISCO DESIGN
architects + planners

99 Chauncy Street, Suite 901
Boston, MA 02111
(617) 426-2858

DGT Associates
Surveying & Engineers
1071 Worcester Road
Framingham, MA 01701
(508) 879-0030

Brown Sardina, Inc.
Landscape Architects
24 Roland Street
Boston, MA 02129
(617) 482-4703

Foley Buhl Roberts & Assoc., Inc.
Structural Engineers
2150 Washington Street
Newton, MA 02462
(617) 527-9600

Crabtree McGrath Assoc., Inc.
Food Service Consultants
161 West Main Street
Georgetown, MA 01833
(978) 352-8500

VAV International, Inc.
Mechanical Engineers
400 West Cummings Park S. 4700
Woburn, MA 01801
(781) 935-7228

Thompson Engineering Company, Inc.
Electrical Engineers
89 Newbury Street, Suite 103
Danvers, MA 01923
(617) 866-9066

EdVance Technology Design, Inc.
Technology Consultants
300 Brickstone Square, Suite 201
Andover, MA 01880
(978) 256-9900

KEY PLAN

NORTH ARROW — STAMP

Date: 21 August 2020
Drawn By: JH
Scale: NONE

Revisions

Number	Date	Description

90% COST ESTIMATE SET

HVAC CONTROLS

9.7.06

© 2020 DiNisco Design

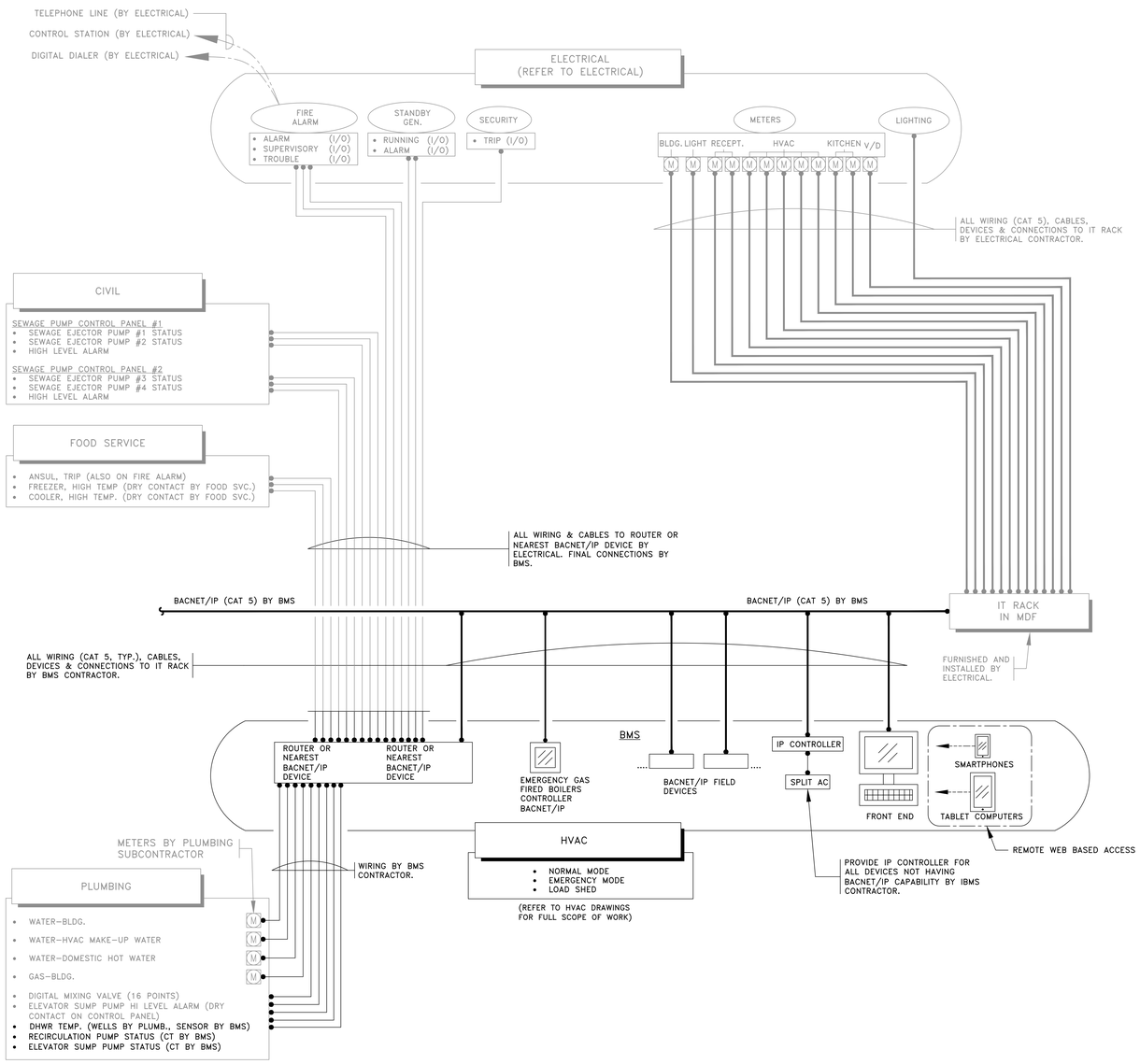

INTEGRATED BUILDING MANAGEMENT SYSTEM (IBMS) ARCHITECTURE

(ALL WORK BY BMS/IBMS UNLESS INDICATED OTHERWISE)

AMESBURY ELEMENTARY SCHOOL

AMESBURY, MA

DINISCO DESIGN
architects + planners

99 Chauncy Street, Suite 901
Boston, MA 02111
(617) 426-2858

DGT Associates
Surveying & Engineers
1071 Worcester Road
Framingham, MA 01701
(508) 879-0030

Brown Sardina, Inc.
Landscape Architects
24 Roland Street
Boston, MA 02129
(617) 482-4703

Foley Buhl Roberts & Assoc., Inc.
Structural Engineers
2150 Washington Street
Newton, MA 02462
(617) 527-9600

Crabtree McGrath Assoc., Inc.
Food Service Consultants
161 West Main Street
Georgetown, MA 01833
(978) 352-8500

VAV International, Inc.
Mechanical Engineers
400 West Cummings Park S. 4700
Woburn, MA 01801
(781) 935-7228

Thompson Engineering Company, Inc.
Electrical Engineers
89 Newbury Street, Suite 103
Danvers, MA 01923
(617) 866-9066

EdVance Technology Design, Inc.
Technology Consultants
300 Brickstone Square, Suite 201
Andover, MA 01880
(978) 256-9900

KEY PLAN

NORTH ARROW — STAMP

Date: 21 August 2020

Drawn By: JH

Scale: NONE

Revisions

Number	Date	Description

90% COST ESTIMATE SET

INTEGRATED BULIDING MANAGEMENT SYSTEM ARCHITECTURE

9.7.07

© 2020 DiNisco Design

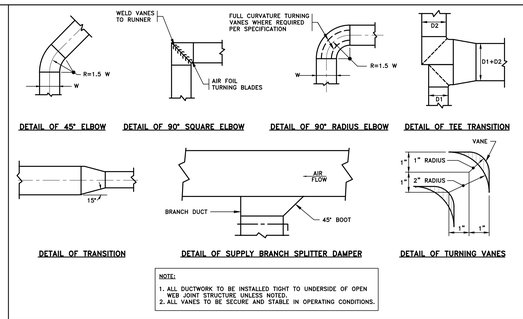

A SHEETMETAL DUCTWORK DETAILS
NOT TO SCALE

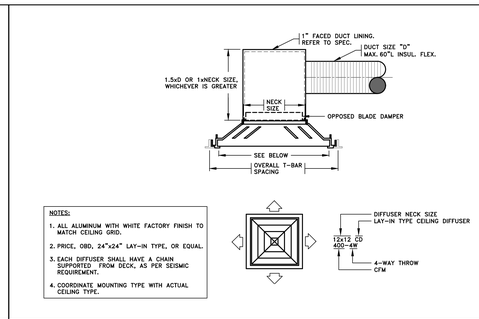

B CEILING DIFFUSER DETAIL
NOT TO SCALE

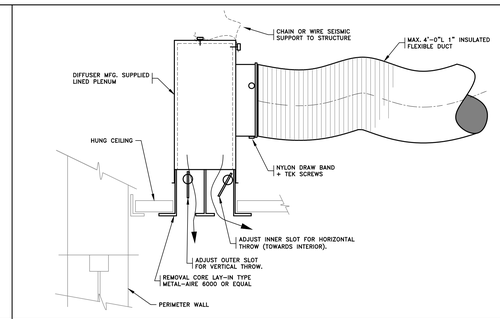

C PERIMETER LINEAR DIFFUSER DETAIL
NOT TO SCALE

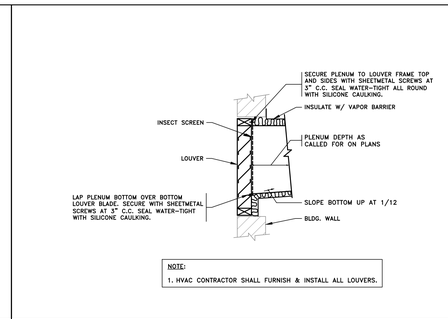

D TYPICAL LOUVER/PLENUM CONNECTION DETAIL
NOT TO SCALE

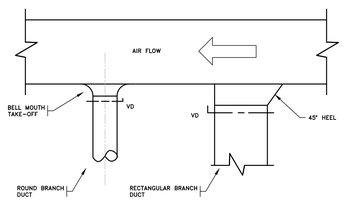

E BRANCH TAKE-OFF DETAILS
NOT TO SCALE

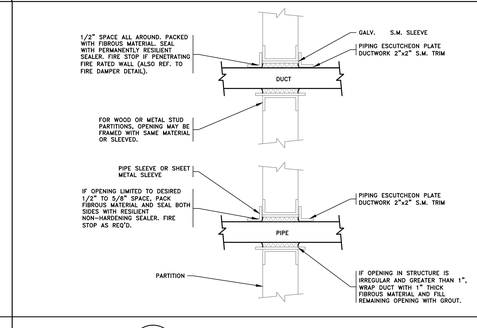

F WALL PENETRATION DETAILS
NOT TO SCALE

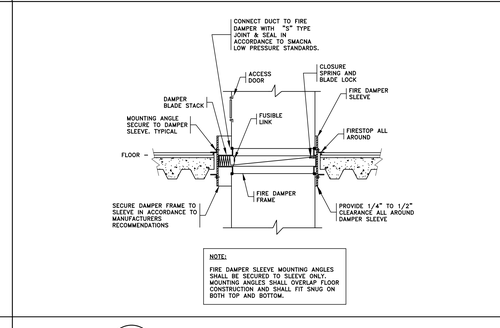

G HORIZONTAL FIRE DAMPER DETAIL
NOT TO SCALE

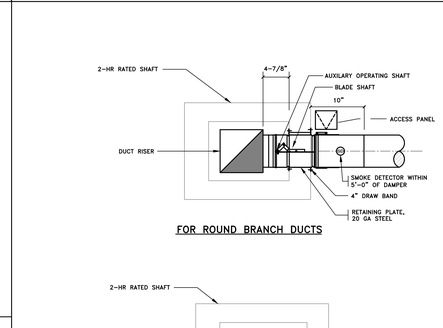

FOR ROUND BRANCH DUCTS

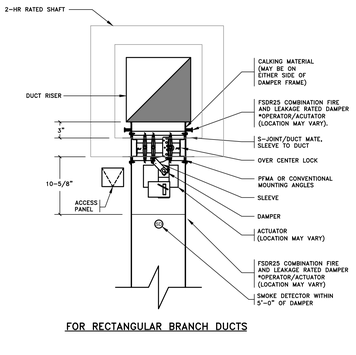

FOR RECTANGULAR BRANCH DUCTS

NOTE:
1. CONTRACTOR SHALL BE RESPONSIBLE FOR COORDINATING VOLTAGE WITH ELECTRICAL.



H ROOF CURB DETAIL
NOT TO SCALE

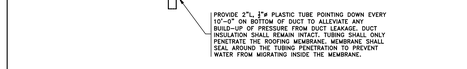

I EXTERIOR DUCTWORK WRAP DETAIL
NOT TO SCALE

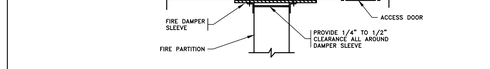

J VERTICAL FIRE DAMPER DETAIL
NOT TO SCALE

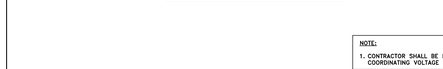

K COMBINATION FIRE/SMOKE DAMPER DETAIL
NOT TO SCALE

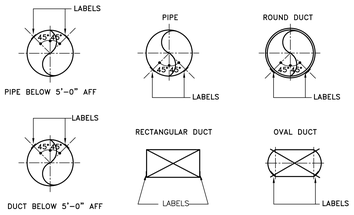

L DUCT AND PIPE IDENTIFICATION LABELING
NOT TO SCALE

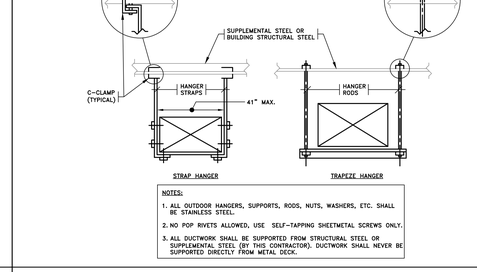

M DUCT HANGER DETAIL
NOT TO SCALE

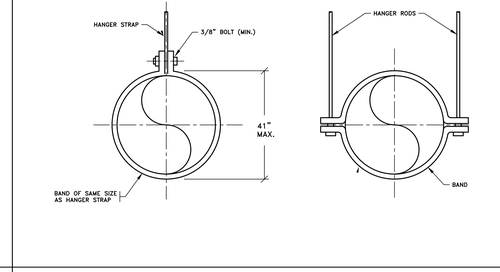

N ROUND DUCT HANGER DETAIL
NOT TO SCALE

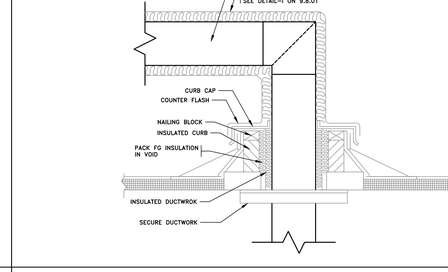

O INSULATED DUCT ROOD PENETRATION
NOT TO SCALE

AMESBURY ELEMENTARY SCHOOL

AMESBURY, MA

DINISCO DESIGN
architects + planners
99 Chauncy Street, Suite 901
Boston, MA 02111
(617) 426-2858

DGT Associates
Surveying & Engineers
1071 Worcester Road
Framingham, MA 01701
(508) 879-0030

Brown Sardina, Inc.
Landscape Architects
24 Roland Street
Boston, MA 02129
(617) 482-4703

Foley Buhl Roberts & Assoc., Inc.
Structural Engineers
2150 Washington Street
Newton, MA 02462
(617) 527-9600

Crabtree McGrath Assoc., Inc.
Food Service Consultants
161 West Main Street
Georgetown, MA 01833
(978) 352-8500

VAV International, Inc.
Mechanical Engineers
400 West Cummings Park S. 4700
Woburn, MA 01801
(781) 935-7226

Thompson Engineering Company, Inc.
Electrical Engineers
89 Newbury Street, Suite 103
Danvers, MA 01923
(617) 866-9066

EdVance Technology Design, Inc.
Technology Consultants
300 Brickstone Square, Suite 201
Andover, MA 01880
(978) 256-9900

KEY PLAN



NORTH ARROW

STAMP

Date: 21 August 2020

Drawn By: JH

Scale: NONE

Revisions

Number	Date	Description

90% COST ESTIMATE SET

HVAC DETAILS

9.8.01

© 2020 DiNisco Design

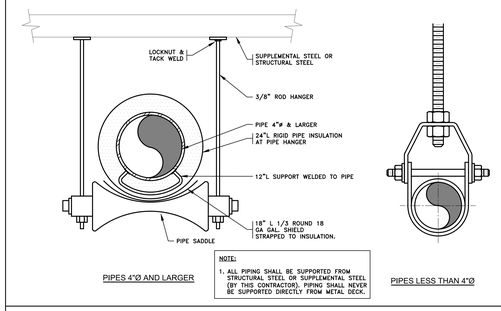

NOTE:
1. ALL PIPING SHALL BE SUPPORTED FROM STRUCTURAL STEEL OR SUPPLEMENTAL STEEL (BY THIS CONTRACTOR). PIPING SHALL NEVER BE SUPPORTED DIRECTLY FROM METAL DECK.

A PIPE HANGER DETAIL
NOT TO SCALE

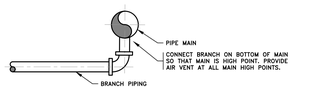

NOTE:
1. PROVIDE MINIMUM OF (3) ELBOWS BEFORE CONNECTION TO ANY EQUIPMENT.

B WATER BRANCH PIPING CONNECTION TO MAIN DETAIL
NOT TO SCALE

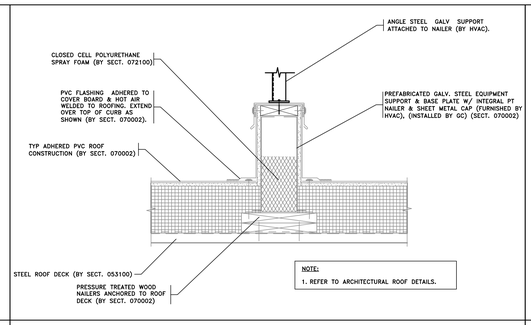

NOTE:
1. REFER TO ARCHITECTURAL ROOF DETAILS.

C ROOF DUCT SUPPORT DETAIL
NOT TO SCALE

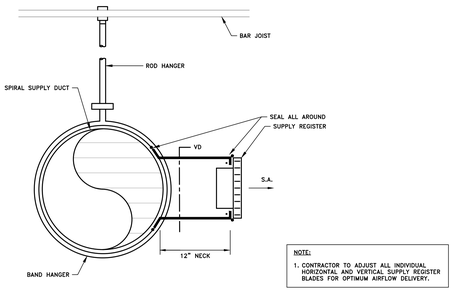

NOTE:
1. CONTRACTOR TO ADJUST ALL INDIVIDUAL HORIZONTAL AND VERTICAL SUPPLY REGISTER BLADES FOR OPTIMUM AIRFLOW DELIVERY.

D SUPPLY REGISTER DETAIL
NOT TO SCALE

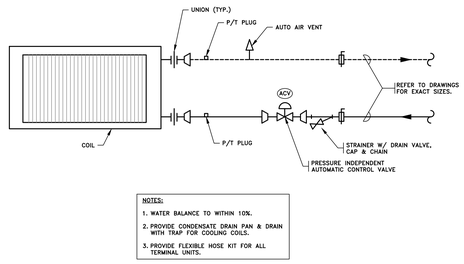

NOTES:
1. WATER BALANCE TO WITHIN 10%.
2. PROVIDE CONDENSATE DRAIN PAN & DRAIN WITH TRAP FOR COOLING COILS.
3. PROVIDE FLEXIBLE HOSE KIT FOR ALL TERMINAL UNITS.

HEATING & COOLING COIL PIPING DETAIL
NOT TO SCALE

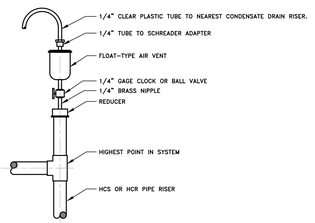

F AUTOMATIC AIR VENT ASSEMBLY
NOT TO SCALE

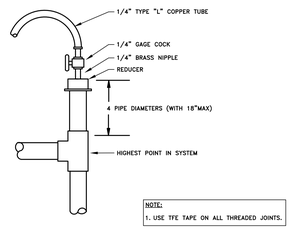

NOTE:
1. USE TFE TAPE ON ALL THREADED JOINTS.

G MANUAL AIR VENT ASSEMBLY
NOT TO SCALE

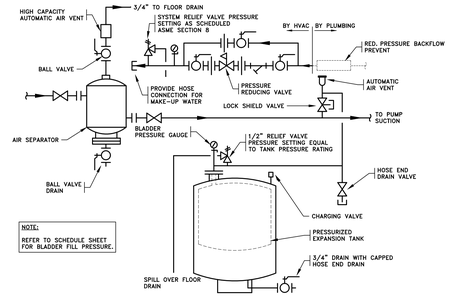

NOTE:
REFER TO SCHEDULE SHEET FOR BLADDER FILL PRESSURE.

PRESSURIZED EXPANSION TANK WITH AIR SEPARATOR
NOT TO SCALE

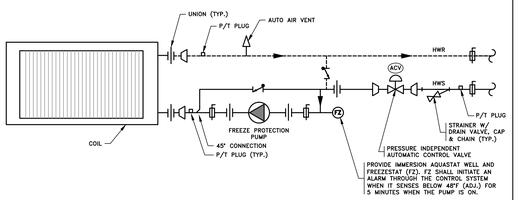

NOTE:
1. WATER BALANCE TO WITHIN 10%.
2. FULL SIZE PUMP BYPASS CHECK VALVE ALLOWS FLOW IF PUMP FAILS
3. PUMP SHALL OPERATE WHENEVER OUTDOOR AIR TEMPERATURE IS BELOW 40°F (ADJ.). PROVIDE PUMP FAILURE ALARM.

COIL PIPING W/ FREEZE PROTECTION PUMP DETAIL
NOT TO SCALE

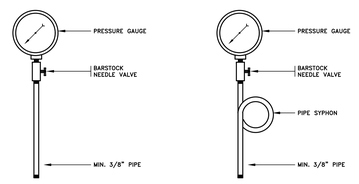

J PRESSURE GAUGE ASSEMBLY DETAIL
NOT TO SCALE

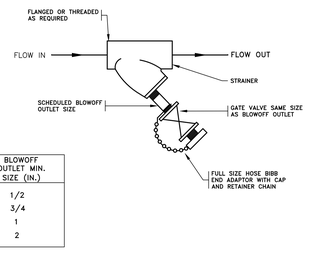

STRAINER SIZE (IN.)	BLOWOFF OUTLET MIN. SIZE (IN.)
3/4	1/2
1 TO 2 1/2	3/4
3 & 4	1
5 & ABOVE	2

K STRAINER ASSEMBLY DETAIL
NOT TO SCALE

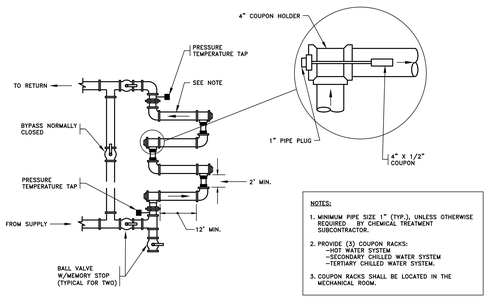

NOTES:
1. MINIMUM PIPE SIZE 1" (TYP.), UNLESS OTHERWISE REQUIRED BY CHEMICAL TREATMENT SUBCONTRACTOR.
2. PROVIDE (3) COUPON RACKS:
   -HOT WATER SYSTEM
   -SECONDARY CHILLED WATER SYSTEM
   -TERTIARY CHILLED WATER SYSTEM.
3. COUPON RACKS SHALL BE LOCATED IN THE MECHANICAL ROOM.

L COUPON RACK
NOT TO SCALE

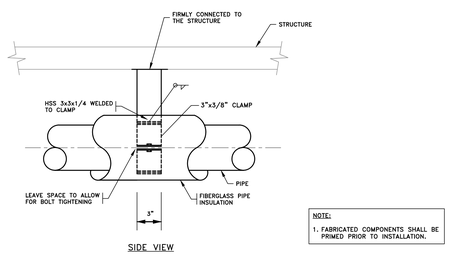

NOTE:
1. FABRICATED COMPONENTS SHALL BE PRIMED PRIOR TO INSTALLATION.

M PIPE ANCHOR DETAILS
NOT TO SCALE

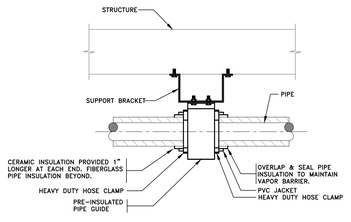

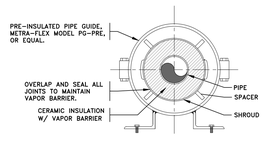

N PIPE GUIDE DETAILS
NOT TO SCALE

AMESBURY ELEMENTARY SCHOOL

AMESBURY, MA

DINISCO DESIGN architects + planners
99 Chauncy Street, Suite 901
Boston, MA 02111
(617) 426-2858

DGT Associates
Surveying & Engineers
1071 Worcester Road
Framingham, MA 01701
(508) 879-0030

Brown Sardina, Inc.
Landscape Architects
24 Roland Street
Boston, MA 02129
(617) 482-4703

Foley Buhl Roberts & Assoc., Inc.
Structural Engineers
2150 Washington Street
Newton, MA 02462
(617) 527-9600

Crabtree McGrath Assoc., Inc.
Food Service Consultants
161 West Main Street
Georgetown, MA 01833
(978) 352-8500

VAV International, Inc.
Mechanical Engineers
400 West Cummings Park S. 4700
Woburn, MA 01801
(781) 935-7228

Thompson Engineering Company, Inc.
Electrical Engineers
89 Newbury Street, Suite 103
Danvers, MA 01923
(617) 866-9066

EdVance Technology Design, Inc.
Technology Consultants
300 Brickstone Square, Suite 201
Andover, MA 01880
(978) 256-9900

KEY PLAN

NORTH ARROW — STAMP

Date: 21 August 2020

Drawn By: JH

Scale: NONE

Revisions

Number	Date	Description

90% COST ESTIMATE SET

HVAC DETAILS

9.8.02

© 2020 DiNisco Design

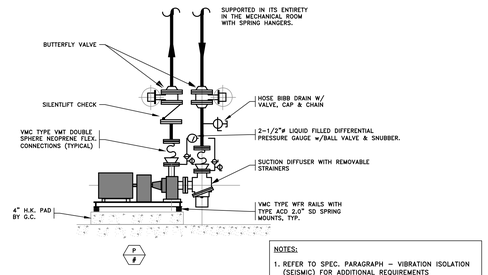

NOTES:
1. REFER TO SPEC. PARAGRAPH – VIBRATION ISOLATION (SEISMIC) FOR ADDITIONAL REQUIREMENTS
2. TRIPLE DUTY VALVES WILL NOT BE ACCEPTED.

BASE-MOUNTED PUMP DETAIL
NOT TO SCALE

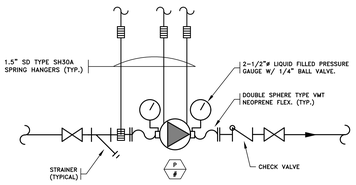

NOTE:
1. REFER TO SPEC. PARAGRAPH 2.35 – VIBRATION ISOLATION (SEISMIC) FOR ADDITIONAL REQUIREMENTS.

B INLINE PUMP DETAIL
NOT TO SCALE

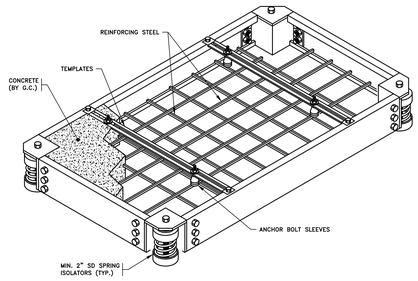

C CONCRETE INERTIA BASE DETAIL
NOT TO SCALE

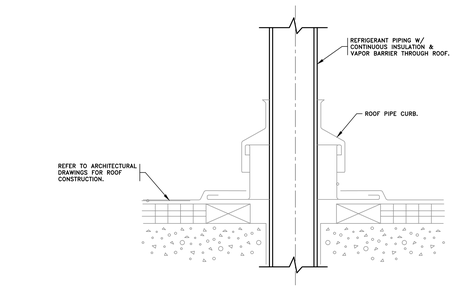

D REFRIGERANT PIPING ROOF PENETRATION DETAIL
NOT TO SCALE

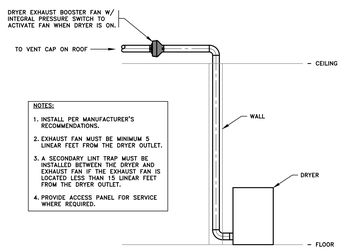

NOTES:
1. INSTALL PER MANUFACTURER'S RECOMMENDATIONS.
2. EXHAUST FAN MUST BE MINIMUM 5 LINEAR FEET FROM THE DRYER OUTLET.
3. A SECONDARY LINT TRAP MUST BE INSTALLED BETWEEN THE DRYER AND EXHAUST FAN IF THE EXHAUST FAN IS LOCATED LESS THAN 15 LINEAR FEET FROM THE DRYER OUTLET.
4. PROVIDE ACCESS PANEL FOR SERVICE WHERE REQUIRED.

E DRYER BOOSTER FAN DETAIL
NOT TO SCALE

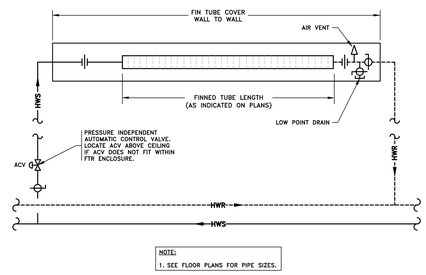

NOTE:
1. SEE FLOOR PLANS FOR PIPE SIZES.

BASEBOARD FINNED TUBE RADITION PIPING DETAIL
NOT TO SCALE

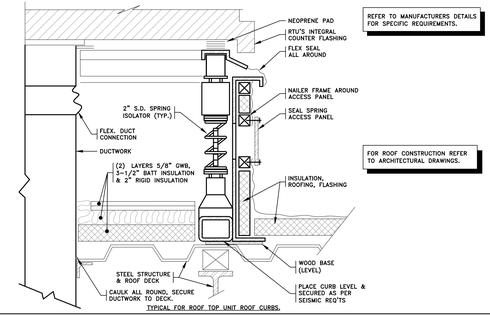

REFER TO MANUFACTURERS DETAILS FOR SPECIFIC REQUIREMENTS.

FOR ROOF CONSTRUCTION REFER TO ARCHITECTURAL DRAWINGS.

TYPICAL FOR ROOF TOP UNIT ROOF CURBS.

G SEISMICALLY RATED VIBRATION ISOLATION CURB DETAIL
NOT TO SCALE

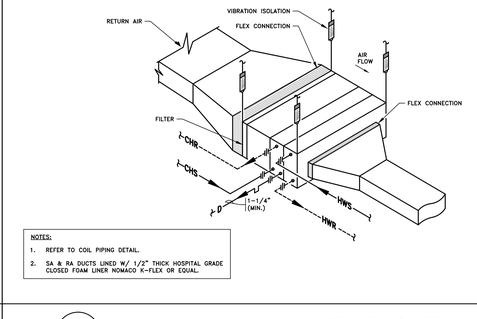

NOTES:
1. REFER TO COIL PIPING DETAIL.
2. SA & RA DUCTS LINED W/ 1/2" THICK HOSPITAL GRADE CLOSED FOAM LINER NOMACO K-FLEX OR EQUAL.

H HORIZONTAL FAN COIL UNIT (DUCTED) DETAIL
NOT TO SCALE

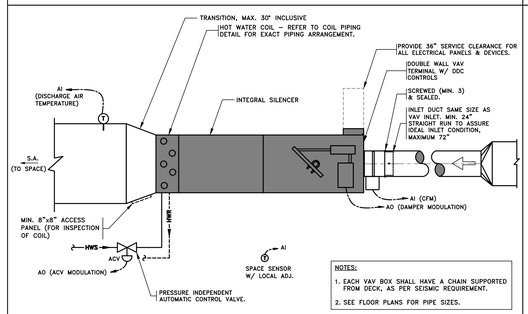

NOTES:
1. EACH VAV BOX SHALL HAVE A CHAIN SUPPORTED FROM DECK, AS PER SEISMIC REQUIREMENT.
2. SEE FLOOR PLANS FOR PIPE SIZES.

I VAV BOX DETAIL
NOT TO SCALE

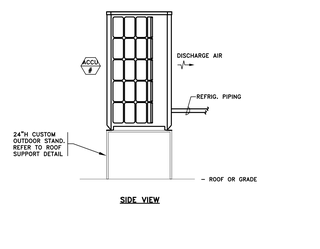

SIDE VIEW

AIR-COOLED CONDENSING UNIT DETAIL
NOT TO SCALE

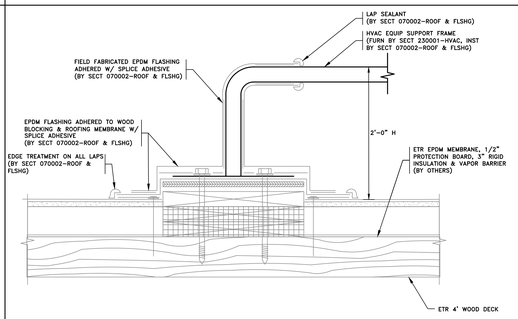

K ROOF SUPPORT DETAIL
NOT TO SCALE

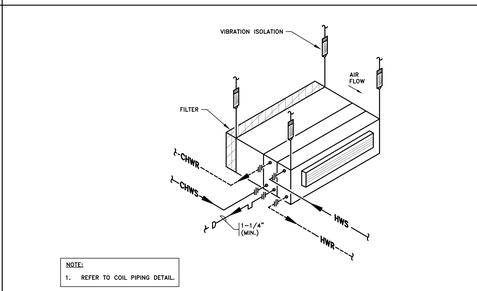

NOTE:
1. REFER TO COIL PIPING DETAIL.

L HORIZONTAL FAN COIL UNIT (NON-DUCTED) DETAIL
NOT TO SCALE

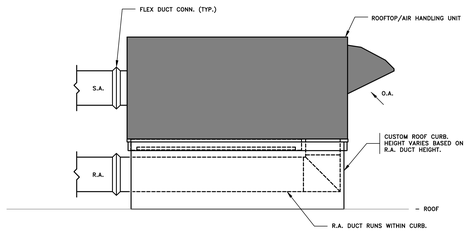

M CUSTOM ROOF CURB SECTION VIEW
NOT TO SCALE

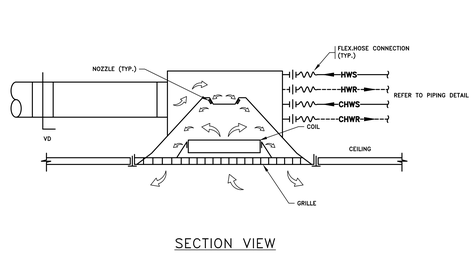

SECTION VIEW

N ACTIVE CHILLED BEAM
NOT TO SCALE

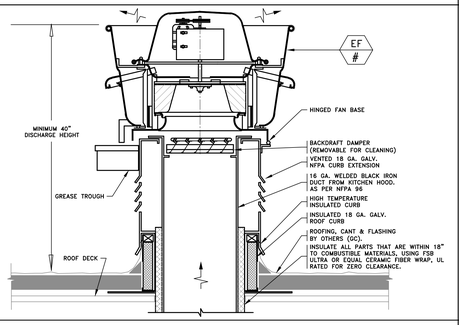

O KITCHEN ROOF EXHAUST FAN DETAIL
NOT TO SCALE

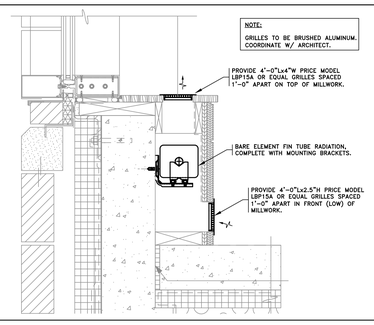

P SECTION @ CAFETERIA MILLWORK
NOT TO SCALE

AMESBURY ELEMENTARY SCHOOL

AMESBURY, MA

DINISCO DESIGN architects + planners
99 Chauncy Street, Suite 901
Boston, MA 02111
(617) 426-2858

DGT Associates
Surveying & Engineers
1071 Worcester Road
Framingham, MA 01701
(508) 879-0030

Brown Sardina, Inc.
Landscape Architects
24 Roland Street
Boston, MA 02129
(617) 482-4703

Foley Buhl Roberts & Assoc., Inc.
Structural Engineers
2150 Washington Street
Newton, MA 02462
(617) 527-9600

Crabtree McGrath Assoc., Inc.
Food Service Consultants
161 West Main Street
Georgetown, MA 01833
(978) 352-8500

VAV International, Inc.
Mechanical Engineers
400 West Cummings Park S. 4700
Woburn, MA 01801
(781) 935-7228

Thompson Engineering Company, Inc.
Electrical Engineers
89 Newbury Street, Suite 103
Danvers, MA 01923
(617) 866-9066

EdVance Technology Design, Inc.
Technology Consultants
300 Brickstone Square, Suite 201
Andover, MA 01880
(978) 256-9900

KEY PLAN

N (Called North)

NORTH ARROW | STAMP

Date: 21 August 2020

Drawn By: JH

Scale: NONE

Revisions

Number	Date	Description

90% COST ESTIMATE SET

HVAC DETAILS

9.8.03

© 2020 DiNisco Design

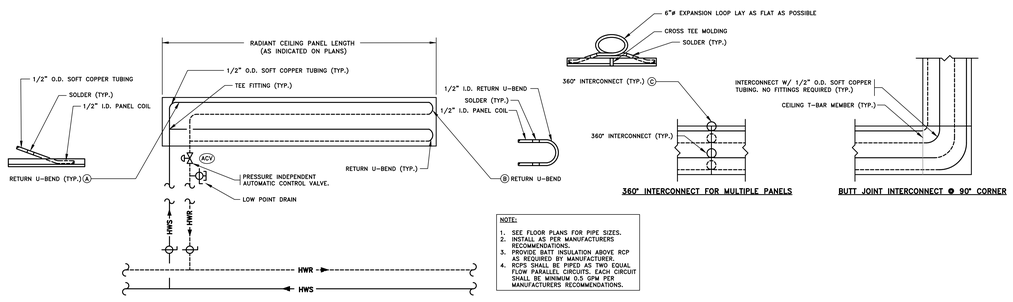

A RADIANT CEILING PANEL PIPING DETAIL
NOT TO SCALE

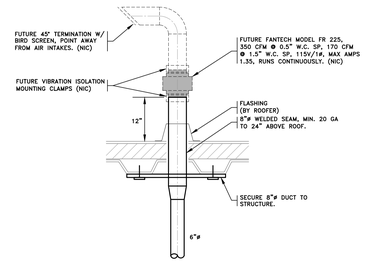

B FUTURE RADON EXHAUST FAN DETAIL
NOT TO SCALE

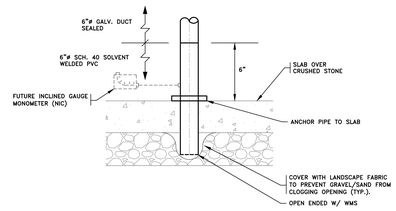

C RADON EXHAUST DETAIL
NOT TO SCALE

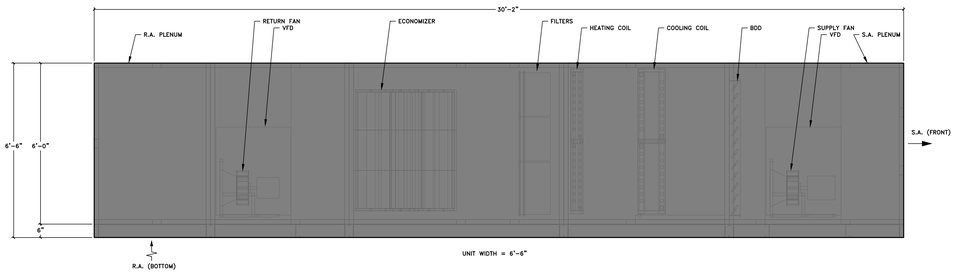

D AHU-1 DETAIL
SCALE: 1/2"=1'-0"

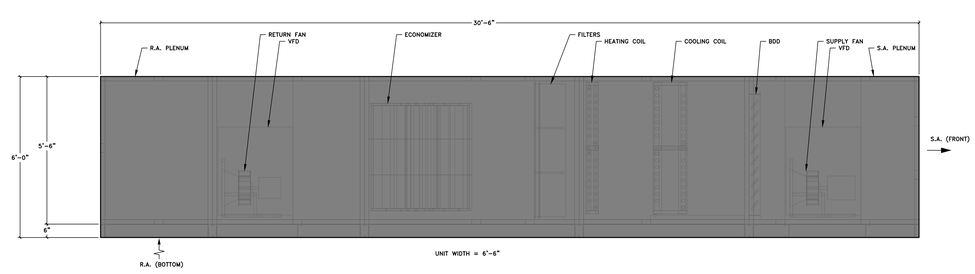

E AHU-2 DETAIL
SCALE: 1/2"=1'-0"

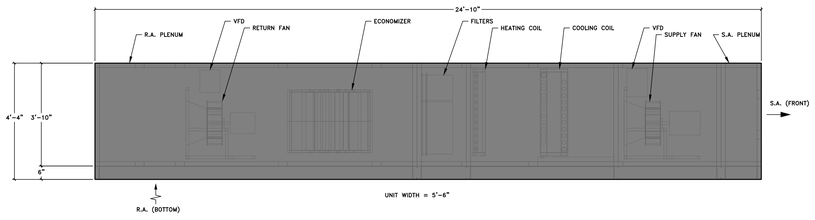

F AHU-3 DETAIL
SCALE: 1/2"=1'-0"

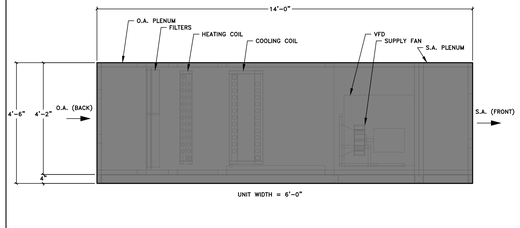

G MAU-1 DETAIL
SCALE: 1/2"=1'-0"

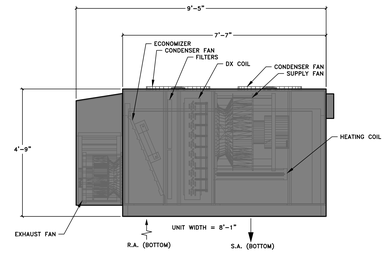

H RTU-1 DETAIL
SCALE: 1/2"=1'-0"

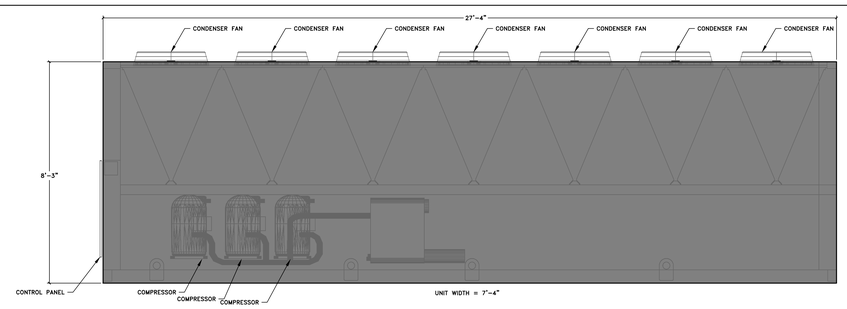

I CH-1 DETAIL
SCALE: 1/2"=1'-0"

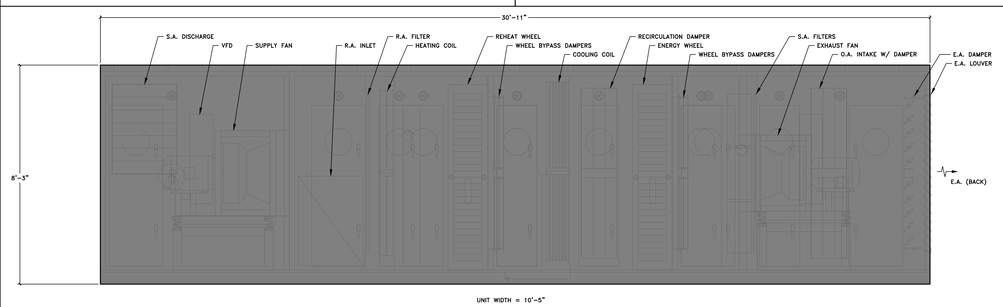

J ERU-1 DETAIL
SCALE: 1/2"=1'-0"

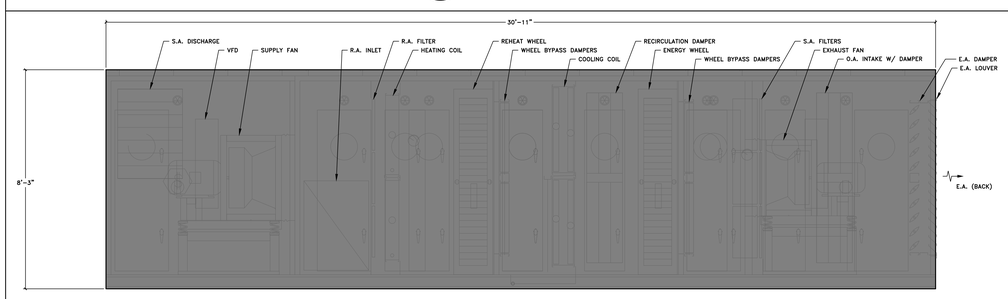

K ERU-2 DETAIL
SCALE: 1/2"=1'-0"

AMESBURY ELEMENTARY SCHOOL

AMESBURY, MA

DINISCO DESIGN
architects + planners

99 Chauncy Street, Suite 901
Boston, MA 02111
(617) 426-2858

DGT Associates
Surveying & Engineers
1071 Worcester Road
Framingham, MA 01701
(508) 879-0030

Brown Sardina, Inc.
Landscape Architects
24 Roland Street
Boston, MA 02129
(617) 482-4703

Foley Buhl Roberts & Assoc., Inc.
Structural Engineers
2150 Washington Street
Newton, MA 02462
(617) 527-9600

Crabtree McGrath Assoc., Inc.
Food Service Consultants
161 West Main Street
Georgetown, MA 01833
(978) 352-8500

VAV International, Inc.
Mechanical Engineers
400 West Cummings Park S. 4700
Woburn, MA 01801
(781) 935-7228

Thompson Engineering Company, Inc.
Electrical Engineers
89 Newbury Street, Suite 103
Danvers, MA 01923
(617) 866-9066

EdVance Technology Design, Inc.
Technology Consultants
300 Brickstone Square, Suite 201
Andover, MA 01880
(978) 256-9900

KEY PLAN

N
Called North

NORTH ARROW *STAMP*

Date: 21 August 2020

Drawn By: JH

Scale: NONE

Revisions

Number	Date	Description

90% COST ESTIMATE SET

HVAC DETAILS

9.8.04

© 2020 DiNisco Design

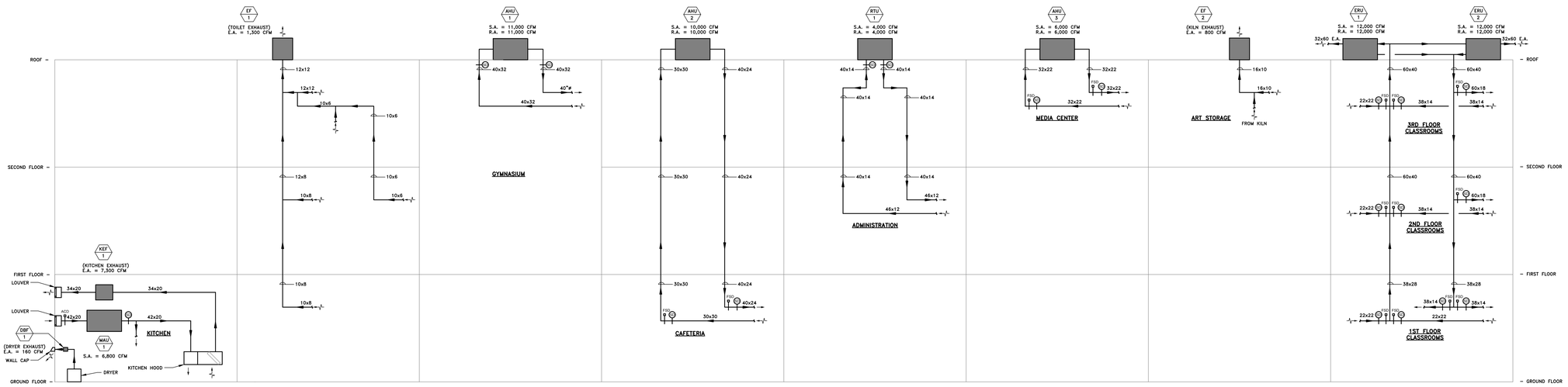

A BUILDING AIRFLOW DIAGRAM
NOT TO SCALE

AMESBURY ELEMENTARY SCHOOL

AMESBURY, MA

DINISCO DESIGN
architects + planners
99 Chauncy Street, Suite 901
Boston, MA 02111
(617) 426-2858

DGT Associates
Surveying & Engineers
1071 Worcester Road
Framingham, MA 01701
(508) 879-0030

Brown Sardina, Inc.
Landscape Architects
24 Roland Street
Boston, MA 02129
(617) 482-4703

Foley Buhl Roberts & Assoc., Inc.
Structural Engineers
2150 Washington Street
Newton, MA 02462
(617) 527-9600

Crabtree McGrath Assoc., Inc.
Food Service Consultants
161 West Main Street
Georgetown, MA 01833
(978) 352-8500

VAV International, Inc.
Mechanical Engineers
400 West Cummings Park S. 4700
Woburn, MA 01801
(781) 935-7228

Thompson Engineering Company, Inc.
Electrical Engineers
89 Newbury Street, Suite 103
Danvers, MA 01923
(617) 866-9066

EdVance Technology Design, Inc.
Technology Consultants
300 Brickstone Square, Suite 201
Andover, MA 01880
(978) 256-9900

KEY PLAN

NORTH ARROW

STAMP

Date: 21 August 2020

Drawn By: JH

Scale: NONE

Revisions

Number	Date	Description

90% COST ESTIMATE SET

HVAC DETAILS

9.8.05

© 2020 DiNisco Design

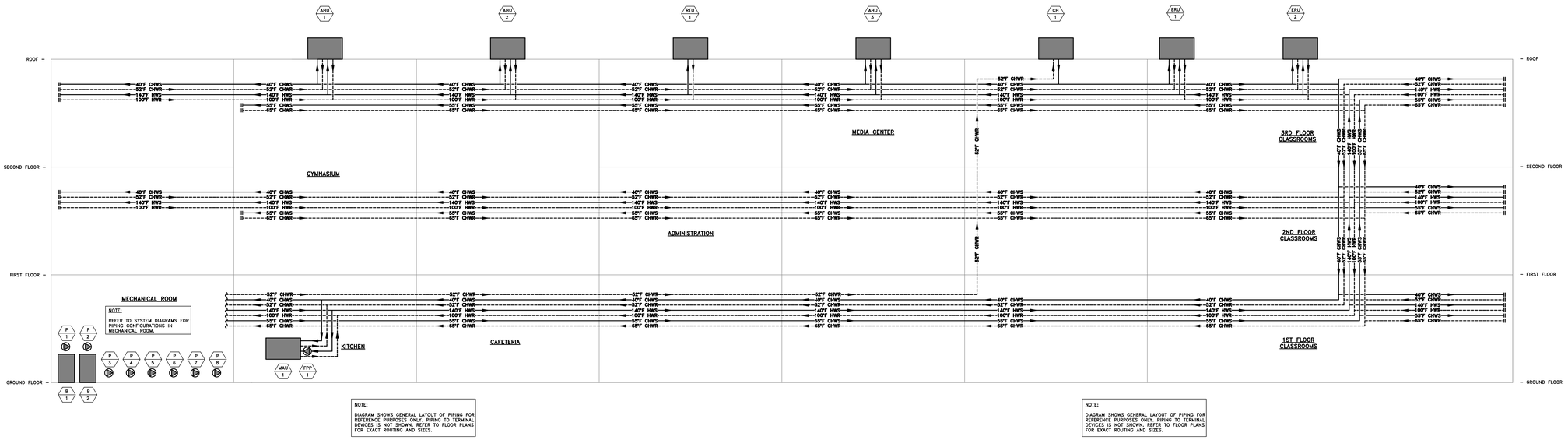

NOTE:
DIAGRAM SHOWS GENERAL LAYOUT OF PIPING FOR REFERENCE PURPOSES ONLY. PIPING TO TERMINAL DEVICES IS NOT SHOWN. REFER TO FLOOR PLANS FOR EXACT ROUTING AND SIZES.

NOTE:
DIAGRAM SHOWS GENERAL LAYOUT OF PIPING FOR REFERENCE PURPOSES ONLY. PIPING TO TERMINAL DEVICES IS NOT SHOWN. REFER TO FLOOR PLANS FOR EXACT ROUTING AND SIZES.

A BUILDING HYDRONIC DIAGRAM
NOT TO SCALE

AMESBURY ELEMENTARY SCHOOL

AMESBURY, MA

DINISCO DESIGN
architects + planners
99 Chauncy Street, Suite 901
Boston, MA 02111
(617) 426-2858

DGT Associates
Surveying & Engineers
1071 Worcester Road
Framingham, MA 01701
(508) 879-0030

Brown Sardina, Inc.
Landscape Architects
24 Roland Street
Boston, MA 02129
(617) 482-4703

Foley Buhl Roberts & Assoc., Inc.
Structural Engineers
2150 Washington Street
Newton, MA 02462
(617) 527-9600

Crabtree McGrath Assoc., Inc.
Food Service Consultants
161 West Main Street
Georgetown, MA 01833
(978) 352-8500

VAV International, Inc.
Mechanical Engineers
400 West Cummings Park S. 4700
Woburn, MA 01801
(781) 935-7228

Thompson Engineering Company, Inc.
Electrical Engineers
89 Newbury Street, Suite 103
Danvers, MA 01923
(617) 866-9066

EdVance Technology Design, Inc.
Technology Consultants
300 Brickstone Square, Suite 201
Andover, MA 01880
(978) 256-9900

KEY PLAN

N
Called North

NORTH ARROW | STAMP

Date: 21 August 2020

Drawn By: JH

Scale: NONE

Revisions

Number	Date	Description

90% COST ESTIMATE SET

HVAC DETAILS

9.8.06

© 2020 DiNisco Design

GENERAL NOTES

1 – OPENINGS AROUND ELECTRICAL PENETRATIONS THROUGH FIRE RESISTANCE RATED WALLS, PARTITIONS, FLOOR, CEILINGS, AND ALL CORRIDOR WALLS SHALL BE FIRESTOPPED BY THE ELECTRICAL CONTRACTOR USING APPROVED METHODS TO MAINTAIN THE FIRE RESISTANCE RATING. USE LOW VOC FIRE PROOFING MATERIALS.

2 – NO PIPING, DUCTS, OR EQUIPMENT FOREIGN TO THE ELECTRICAL EQUIPMENT OR ARCHITECTURAL APPURTENANCES SHALL BE PERMITTED TO BE INSTALLED IN, ENTER OR PASS THROUGH THE ELECTRIC ROOMS OR THE EMERGENCY GENERATOR ROOM.

3 – PRIOR TO THE INSTALLATION OF ANY CONDUIT RACEWAYS IN THE AREAS THAT DO NOT HAVE CEILINGS, THE ELECTRICAL SUBCONTRACTOR SHALL REVIEW WITH THE ARCHITECT THE EXACT LOCATION OF EACH FEEDER OR BRANCH CIRCUIT RACEWAY. THE INSTALLATION OF CONDUIT RACEWAYS WITHIN THESE AREAS, SHALL BE KEPT TO AN ABSOLUTE MINIMUM. DO NOT INSTALL ANY EXPOSED CONDUIT RACEWAYS IN FINISHED AREAS WITHOUT THE EXPRESS WRITTEN APPROVAL OF THE ARCHITECT.

4 – ALL POWER WIRING FOR ALL MECHANICAL, PLUMBING, FIRE PROTECTION AND KITCHEN EQUIPMENT SHALL BE INSTALLED IN CONDUIT RACEWAYS AS SPECIFIED IN THE ELECTRICAL SPECIFICATIONS AND THE ELECTRICAL DRAWINGS. ALL POWER WIRING TO CLASSROOM AND CORRIDOR FAN COIL UNITS SHALL BE TYPE MC METAL CLAD CABLE. ALL 120-V WIRING FOR VAV BOXES SHALL BE TYPE MC METAL CLAD CABLE.

5 – ALL FIRE ALARM SYSTEM WIRING SHALL BE INSTALLED IN EMT CONDUIT RACEWAYS (EXPOSED) OR FIRE ALARM MC CABLE (CONCEALED) AS SPECIFIED IN THE ELECTRICAL SPECIFICATIONS AND THE ELECTRICAL DRAWINGS.

6 – ALL TECHNOLOGY SYSTEM EMPTY CONDUIT SHALL BE INSTALLED AS SPECIFIED IN THE ELECTRICAL SPECIFICATIONS AND ELECTRICAL DRAWINGS.

7 – ALL SECURITY SYSTEM WIRING SHALL BE TYPE MC METAL CLAD CABLE AS SPECIFIED IN THE ELECTRICAL SPECIFICATIONS AND THE ELECTRICAL DRAWINGS.

8 – ALL LIGHTING CIRCUIT HOME RUNS AND BRANCH CIRCUIT WIRING INCLUDING WIRING TO THE FIXTURE AND THE ROOM SWITCH SHALL BE TYPE MC METAL CLAD CABLE (CONCEALED LOCATIONS).

9 – ALL RECEPTACLE CIRCUIT HOME RUNS AND BRANCH CIRCUIT WIRING INCLUDING WIRING TO EACH RECEPTACLE SHALL BE TYPE MC METAL CLAD CABLE (CONCEALED LOCATIONS).

10 – ALL POWER WIRING FOR MECHANICAL, PLUMBING AND FIRE PROTECTION EQUIPMENT LOCATED IN MECHANICAL ROOMS SHALL BE INSTALLED IN CONDUIT RACEWAYS, THIS INCLUDES ALL BOILERS, AHU'S, PUMPS, ETC. ALL FEEDERS TO ROOF MOUNTED HVAC UNITS SHALL BE INSTALLED IN CONDUIT RACEWAYS.

11 – TYPE MC METAL CLAD WILL ONLY BE ALLOWED FOR LIGHTING AND RECEPTACLE BRANCH CIRCUITS AS DESCRIBED ABOVE. TYPE MC CABLE WILL ONLY BE ALLOWED IN CONCEALED WALL OR CEILING LOCATIONS ONLY. NO TYPE MC CABLE WILL BE ALLOWED IN AREAS WITH NO CEILINGS OR RUN SURFACE MOUNTED. ALL OTHER SYSTEMS WIRING SHALL BE FURNISHED AND INSTALLED IN CONDUIT RACEWAYS AS SPECIFIED IN THE ELECTRICAL SPECIFICATIONS AND ELECTRICAL DRAWINGS.

12 – ALL ELECTRICAL SYSTEMS INSTALLED IN OR PASSING THROUGH AREAS WITH EXPOSED STRUCTURAL CEILINGS SHALL BE INSTALLED IN EMT CONDUIT RACEWAYS.

13 – AREAS OF THE BUILDING HAVE BEEN DESIGNED WITH EXPOSED STRUCTURAL WALLS OR SURFACE METAL RACEWAY. IN THESE AREAS, ALL ELECTRICAL AND COMMUNICATIONS SYSTEMS WIRING SHALL BE INSTALLED IN EMT CONDUIT OR SURFACE METAL RACEWAY. NO EXPOSED MC CABLE WILL BE ACCEPTED IN THESE AREAS. REFER TO ARCHITECTURAL DRAWINGS AND REFLECTED CEILING PLANS FOR AREAS WITHOUT ACT CEILINGS. SUBMIT CONDUIT ROUTING SHOP DRAWINGS FOR THE GYM PRIOR TO INSTALLATION.

14 – IN AREAS WITHOUT FINISHED CEILINGS (GYM, STORAGE, MECHANICAL, ETC.), ELECTRICAL CONTRACTOR TO FURNISH AND INSTALL THE REQUIRED MECHANICAL SUSPENSION CHANNEL AND ASSOCIATED REQUIRED MATERIAL TO PROPERLY SUPPORT ALL LIGHTING FIXTURES, ELECTRICAL EQUIPMENT AND CONDUITS. MECHANICAL CHANNEL TO BE SUPPORTED FROM STEEL TRUSSES, OR STRUCTURAL CEILINGS AS REQUIRED TO PROPERLY SUPPORT AND LOCATE LIGHTING FIXTURES OR EQUIPMENT IN LOCATIONS SHOWN ON THE ARCHITECTURAL DRAWINGS.

15 – IT IS THE INTENT OF THIS PROJECT FOR ALL WALL MOUNTED ELECTRICAL DEVICES AND ASSOCIATED WIRING TO BE INSTALLED RECESSED EXCEPT IN MECHANICAL AND ELECTRICAL ROOMS. THIS INCLUDES ALL WALL TYPES INCLUDING CMU AND CONCRETE. ELECTRICAL CONTRACTOR TO REQUEST FOR PERMISSION FOR SURFACE MOUNTED EQUIPMENT AND CONDUIT PRIOR TO INSTALLATION FOR ROOMS WHERE IT MAY NOT BE POSSIBLE TO RECESS EQUIPMENT AND CONDUIT.

ELECTRICAL GENERAL NOTES

1 – BY SUBMITTING A BID, ARE DEEMED TO BE COMPLETELY FAMILIAR WITH THE EXISTING CONDITION OF THE SITE AS IT INFLUENCES THE WORK DESCRIBED. ABSOLUTELY NO CLAIMS FOR EXTRA COMPENSATION WILL BE CONSIDERED FOR EXISTING CONDITIONS VISIBLE OR REASONABLY INFERABLE FROM A CAREFUL EXAMINATION OF THE EXISTING SITE.

2 – THIS CONTRACTOR SHALL INSPECT THE EXISTING FIELD CONDITIONS AT THE SITE AND CONTRACT DOCUMENTS PRIOR TO THE START OF ANY WORK TO DETERMINE THE EFFECT THE EXISTING CONDITIONS WILL HAVE ON HIS WORK. POTENTIAL PROBLEM AREAS SHALL BE BROUGHT TO THE ATTENTION OF THE ARCHITECT AND/OR ENGINEER IMMEDIATELY.

3 – THE NEW WORK SHALL BE COMPATIBLE WITH THE BUILDING. LOCATION OF EQUIPMENT OR THE ROUTING OF VARIOUS SYSTEMS AS WELL AS FLOOR SLABS OR WALLS SHALL BE COORDINATED WITH OTHER TRADES AND AS THEY APPEAR IN THE FIELD OR ON THE DRAWINGS.

4 – CARE SHALL BE TAKEN DURING THE INSTALLATION OF THE NEW WORK, AS NOT TO DAMAGE OR INTERRUPT THE OTHER BUILDING SYSTEMS AND STRUCTURE INSTALLED. DAMAGE TO THE STRUCTURE AND/OR OTHER EQUIPMENT CAUSED BY THIS CONTRACTOR DURING INSTALLATION SHALL BE REPAIRED AND/OR REPLACED AT THIS CONTRACTOR'S EXPENSE TO THE COMPLETE SATISFACTION OF THE OWNER.

5 – SHUTDOWN OF BUILDING ELECTRICAL SYSTEMS FOR CONNECTION TO SERVICES SHALL BE COORDINATED WITH THE ARCHITECT AND OWNER. THIS CONTRACTOR SHALL SUBMIT REQUESTS, WHERE THEY AFFECT THE OPERATION OF THE BUILDING. SHUTDOWNS TO BE PERFORMED DURING PREMIUM TIME, AT LEAST ONE WEEK IN ADVANCE OF ANY REQUIRED SHUTDOWN. THE ACTUAL SHUTDOWN PERIOD WILL BE AS SHORT AS POSSIBLE AND AT A TIME MUTUALLY AGREEABLE TO THE OWNER AND THE ARCHITECT.

6 – DRAWINGS ARE DIAGRAMMATIC, THEREFORE DETERMINE EXACT LOCATIONS OF SYSTEMS AND COMPONENTS IN THE FIELD.

7 – ALL WORK SHALL BE COORDINATED WITH ALL TRADES INVOLVED.

8 – VERIFY ALL EQUIPMENT CONNECTIONS WITH MANUFACTURER'S CERTIFIED SHOP DRAWINGS. FIELD VERIFY AND COORDINATE ALL ELECTRICAL EQUIPMENT AND CHARACTERISTICS.

9 – REFER TO ARCHITECTURAL PLANS FOR DETAILS AND COORDINATION.

10 – ALL MATERIALS AND EQUIPMENT INDICATED AS NEW SHALL BE NEW.

11 – ANY DEMOLITION SHALL BE COORDINATED WITH OWNER, ARCHITECT, CM, AND ENGINEER.

12 – ALL ACCESS PANELS REQUIRED FOR ALL ELECTRICAL/COMMUNICATION/SECURITY INSTALLATION SHALL BE FURNISHED AND INSTALLED BY ELECTRICAL CONTRACTOR. REFER TO ARCHITECTURAL DWGS AND SPECIFICATIONS FOR DETAILS.

13 – CONTRACTOR SHALL REPORT ANY EQUIPMENT DEFICIENCIES FOUND TO THE ARCHITECT AND/OR ENGINEER.

14 – THE FIRE-PROOFING OF THE BUILDING STRUCTURE IS NOT TO BE REMOVED FOR THE INSTALLATION OF HANGERS OR SUPPORTERS OF ELECTRICAL EQUIPMENT. IF FIRE-PROOFING IS DAMAGED DURING INSTALLATION, IT SHALL BE REPAIRED AT THE EXPENSE OF THE ELECTRICAL CONTRACTOR.

BRANCH CIRCUIT WIRING NOTES

1 – ALTHOUGH ALL BRANCH CIRCUIT WIRING IS NOT SHOWN ON THE DRAWINGS, IT IS THE INTENT OF THESE DOCUMENTS THAT A COMPLETE BRANCH CIRCUIT WIRING SYSTEM IN CONDUIT RACEWAYS (EMT OR RIGID) OR TYPE MC METAL CLAD CABLE BE INSTALLED.

2 – RACEWAYS SHALL BE LIMITED TO SIX CURRENT CARRYING CONDUCTORS (THREE PHASE AND THREE NEUTRALS) AND GROUNDING CONDUCTOR, UNLESS OTHERWISE INDICATED. PROVIDE A DEDICATED NEUTRAL CONDUCTOR FOR EACH SINGLE PHASE CIRCUIT UNLESS AN OVERSIZED NEUTRAL IS SPECIFICALLY INDICATED.

3 – WIRING INDICATED BY CIRCUIT NUMBER SYMBOL SHALL INCLUDE A NEUTRAL WHEN THE LOAD SERVED HAS PROVISIONS FOR, OR REQUIRES A NEUTRAL.

4 – WIRING IS INDICATED ON DRAWINGS ONLY FOR SPECIFIC ROUTES OR SPECIAL CONDITIONS.

5 – ALL MOTOR BRANCH CIRCUIT WIRING SHALL BE INSTALLED IN CONDUIT RACEWAYS (EMT OR RIGID) FROM THE PANELS TO THE DISCONNECT SWITCHES, STARTERS AND MOTORS IN THE MAIN MECHANICAL ROOM OR FIRE PUMP ROOM.

6 – FURNISH AND INSTALL A SEPARATE NEUTRAL CONDUCTOR FOR EACH RECEPTACLE AND LIGHTING BRANCH CIRCUIT. COMMON NEUTRAL CONDUCTORS FOR CIRCUITS WILL NOTE BE ALLOWED.

7 – CONDUIT AND WIRE SHALL BE REQUIRED BETWEEN ALL OUTLETS, SWITCHES, JUNCTION BOXES AND EQUIPMENT INDICATED ON THE DRAWINGS WITH CIRCUIT NUMBERS, SWITCH CONTROLS AND PANEL DESIGNATIONS.

8 – ALL LIGHTING, RECEPTACLE AND EQUIPMENT BRANCH CIRCUITS SHALL BE WIRED IN ACCORDANCE WITH THE OUTLET NUMBER INDICATED.

9 – ALL SWITCH CONTROLS SHALL BE PROVIDED WITH WIRING AND CONDUIT AS REQUIRED.

10 – ALL RECEPTACLE, MOTOR AND LIGHTING BRANCH CIRCUITS SHALL BE PROVIDED WITH AN INSULATED COPPER GROUND WIRE.

11 – ALL BRANCH CIRCUIT WIRING WITHIN JUNCTION BOXES SHALL BE TAGGED AND IDENTIFIED. ALL JUNCTION BOXES SHALL BE IDENTIFIED AS TO PANEL ORIGINATION.

12 – ALL NETWORK BRANCH CIRCUITS SHALL BE PROPERLY PHASED OUT IN EACH PANELBOARD.

13 – ALL ELECTRICAL EQUIPMENT INCLUDING RIGID STEEL CONDUIT AND ELECTRICAL METALLIC TUBING SHALL BE INSTALLED AND PROPERLY SUPPORTED IN ACCORDANCE WITH THE MASSACHUSETTS ELECTRICAL CODE AND THE MASSACHUSETTS STATE BUILDING CODE.

SYMBOL LIST

(REFER TO DWG. 10.0.02 FOR TECHNOLOGY SYMBOL LIST)

INTRUSION ALARM SYMBOLS

REFER TO SPECIFICATIONS.

REFER TO ARCHITECTURAL DETAIL DRAWINGS FOR EXACT LOCATION AND MOUNTING HEIGHTS OF INTRUSION ALARM SYSTEM EQUIPMENT. COORDINATE DEVICE MOUNTING, CABLE PATHWAY, AND BACKBOX REQUIREMENTS OF ALL DEVICES WITH SECURITY CONTRACTOR SECTION 281000.

INTRUSION ALARM SYSTEM EQUIPMENT, CABLING, LABOR SHALL BE FURNISHED AND INSTALLED BY THE DIVISION 281000 SECURITY CONTRACTOR.

ELECTRICAL CONTRACTOR TO FURNISH AND INSTALL ALL REQUIRED BORES, CONDUITS, AND 120V CIRCUITRY.

— ADDRESSABLE PASSIVE INFRARED (PIF) MOTION DETECTOR WITH DRIVER. FURNISH WITH SWIVEL MOUNTING BRACKET. "LM" INDICATES LONG RANGE. "C" INDICATES CEILING MOUNTED.

(M) — ADDRESSABLE CONCEALED STEEL OR WOOD DOOR TYPE MAGNETIC CONTACTS.

(F) — FLOOR RECESSED STEEL OVERHEAD DOOR MAGNETIC CONTACTS.

(C) — CEILING MOUNTED PASSIVE INFRARED (PIF) MOTION DETECTOR WITH DRIVER.

(S) — RECESSED SIREN – SIREN DRIVER LOCATED IN CONTROL PANEL.

KP — ADDRESSABLE RECESSED KEY PAD (LCD). PROVIDE A CLEAR PLASTIC LOCKABLE COVER FOR EACH KEY PAD.

PS — ACCESS CONTROL SYSTEM DOOR HARDWARE POWER SUPPLY

ET — ELECTRIC DOOR TRIM HARDWARE OUTLET BOX.

SOUND SYSTEM SYMBOLS

2 (M) — MICROPHONE OUTLET. "2" INDICATES A TWO-PORT OUTLET. REFER TO SPECIFICATIONS.

(M) — CEILING HUNG MICROPHONE OUTLET. REFER TO SPECIFICATIONS.

(S) — WALL MOUNTED SPEAKERS FOR LOCAL SOUND SYSTEMS. REFER TO SPECIFICATIONS.

(S) (S) — CEILING SURFACE MOUNTED SPEAKERS FOR LOCAL SOUND SYSTEMS. REFER TO SPECIFICATIONS.

WA — WIRELESS MIC ANTENNA.

HA — ASSISTIVE LISTENING ANTENNA.

MISCELLANEOUS SYMBOLS

(S) — MOTOR. NUMERAL INDICATES HORSEPOWER.

— MOTOR DISCONNECT SWITCH. FURNISHED AND INSTALLED BY THE ELECTRICAL SUBCONTRACTOR.

S — REMOTE MOUNTED MAGNETIC MOTOR STARTER. FURNISHED AND INSTALLED BY THE ELECTRICAL SUBCONTRACTOR.

S — COMBINATION MAGNETIC MOTOR STARTER AND MOTOR DISCONNECT SWITCH. FURNISHED AND INSTALLED BY THE ELECTRICAL SUBCONTRACTOR.

F — FUSED DISCONNECT SWITCH. "F" INDICATES FUSED SWITCH. FUSE SIZE SHALL BE IN ACCORDANCE WITH THE EQUIPMENT MANUFACTURER'S RECOMMENDATIONS AND SPECIFICATIONS. FURNISH AND INSTALLED BY THE ELECTRICAL SUBCONTRACTOR.

— CONDUIT PENETRATION FROM BELOW EQUIPMENT.

— THERMAL SWITCH FOR MOTORS LESS THAN ½ HP. FURNISHED AND INSTALLED BY THE ELECTRICAL SUBCONTRACTOR.

— CONDUIT (ELECTRICAL METALLIC TUBING OR MC CABLE) – ARROW INDICATES HOME RUN. DIAGONAL LINES INDICATE NUMBER OF #12 AWG WIRES. DOT INDICATES #12 AWG GREEN EQUIPMENT GROUND WIRE. (UNLESS OTHERWISE NOTED).

— JUNCTION BOX.

— POWER PANEL.

— LIGHTING PANEL.

VFD — VARIABLE FREQUENCY DRIVES. FURNISHED BY HVAC SUBCONTRACTOR. INSTALLED AND WIRED BY THE ELECTRICAL SUBCONTRACTOR.

(A) — AQUASTAT. FURNISHED AND INSTALLED BY PLUMBING SUBCONTRACTOR. WIRED BY THE ELECTRICAL SUBCONTRACTOR.

(R) — 120-VOLT RELAY WITH 24-VOLT COIL.

VAV — JUNCTION BOX VARIABLE AIR VOLUME. FURNISHED AND INSTALLED BY HVAC SUBCONTRACTOR. WIRED BY THE ELECTRICAL CONTRACTOR.

3S — THREE-SPEED SWITCH. FURNISHED BY HVAC SUBCONTRACTOR. INSTALLED AND WIRED BY THE ELECTRICAL SUBCONTRACTOR.

— 4" CONDUIT SLEEVE. FURNISHED AND INSTALLED BY THE ELECTRICAL SUBCONTRACTOR.

TF — AUTOMATIC FLUSH VALVE/FAUCET TRANSFORMER IN 4"X4" WORKBOX. REFER TO PLANS AND DETAILS. COORDINATE WITH PLUMBING.

DO — ADA DOOR OPERATOR PUSHBUTTON.

— MECHANICAL OR MOTORIZED EQUIPMENT TAG. REFER TO MECHANICAL/MOTORIZED EQUIPMENT SCHEDULE.

AT — LIGHTNING PROTECTION AIR TERMINAL.

— RECEPTACLE RELAY CABINET.

— ALL MOMENTARY CONTACT SWITCHES WITH PILOT LIGHTS.

— TWO-WAY COMMUNICATIONS SYSTEM CALL BOX STATION.

— TWO-WAY COMMUNICATIONS SYSTEM BASE STATION.

— POWER SUPPLY.

RECEPTACLES

REFER TO ARCHITECTURAL DETAIL DRAWINGS FOR EXACT LOCATION AND MOUNTING HEIGHT OF RECEPTACLES.

THE ELECTRICAL CONTRACTOR SHALL FURNISH AND INSTALL A SELF-ADHESIVE (P-TOUCH) LABEL ON ALL RECEPTACLE AND SWITCH DEVICE PLATES INDICATING PANEL AND CIRCUIT SERVING DEVICE.

A — DUPLEX RECEPTACLE – TAMPER RESISTANT 20A–125V–3W WITH GROUND CONNECTION. LETTER INDICATES THAT THE RECEPTACLE IS CONTROLLED BY A SWITCH. "CR" INDICATES CONTROLLED RECEPTACLE WITH I/O POWER SYMBOL VISIBLE.

U — QUAD RECEPTACLE – DOUBLE DUPLEX TAMPER RESISTANT RECEPTACLE. "U" INDICATES RECEPTACLES WITH INTEGRAL USB CHARGING PORTS.

— DUPLEX TAMPER RESISTANT RECEPTACLE MOUNTED ABOVE COUNTER UNLESS OTHERWISE NOTED.

— DUPLEX TAMPER RESISTANT RECEPTACLE ON EMERGENCY CIRCUIT.

WP — GROUND FAULT INTERRUPTER – DUPLEX TAMPER RESISTANT RECEPTACLE 20A–125V–3W. "WP" INDICATES RECEPTACLE INSTALL IN A NEMA 3R ENCLOSURE.

— GROUND FAULT INTERRUPTER MOUNTED ABOVE COUNTER UNLESS OTHERWISE NOTED.

— GROUND FAULT INTERRUPTER ON EMERGENCY CIRCUIT.

2 — SURGE SUPPRESSION – DUPLEX RECEPTACLE 20A–125V–3W WITH GROUND CONNECTION. 2 INDICATES TWO DUPLEX RECEPTACLES.

IG — DUPLEX ISOLATED GROUND SURGE SUPPRESSION RECEPTACLE 20A–125V–3W WITH GROUND CONNECTION

— SINGLE RECEPTACLE 20A–125V–3W WITH GROUND CONNECTION.

— SINGLE RECEPTACLE 30A–125/250V–4W WITH GROUND CONNECTION.

— SINGLE RECEPTACLE 20A–250V–4W WITH GROUND CONNECTION.

— FOUR PORT USB POWER RECEPTACLE. HUBBELL USB4W OR APPROVED EQUAL.

— COMBINATION FLOOR BOX FOR DUPLEX RECEPTACLE AND TELEPHONE/DATA JACKS WIREMOLD WALKERBOX RFB2 SERIES WITH BRASS TILE FLANGE OR APPROVED EQUAL. REFER TO SPECIFICATIONS.

— COMBINATION FLOOR BOX FOR TWO DUPLEX RECEPTACLES AND TWO TELEPHONE/DATA JACKS WIREMOLD WALKERBOX RFB11 SERIES WITH BRASS CARPET FLANGE OR APPROVED EQUAL. REFER TO SPECIFICATIONS.

C — DROP DOWN RECEPTACLE CORD REEL.

FIRE ALARM SYSTEM

(REFER TO SPECIFICATIONS)

REFER TO ARCHITECTURAL DETAIL DRAWINGS FOR EXACT LOCATION AND MOUNTING HEIGHTS OF FIRE ALARM SYSTEM ALARM EQUIPMENT.

F — FIRE ALARM SYSTEM MANUAL PULL STATION. MUST BE INSTALLED WITHIN 5'-0" OF DOOR JAMB.

F F 75 — FIRE ALARM SYSTEM PULL STATION WITH COMBINATION SPEAKER/STROBE UNIT ABOVE (ADA CODE) ON RISER. LETTER INDICATES STROBE LIGHT CIRCUIT AND NUMERAL INDICATES SPEAKER CIRCUIT. ON FLOOR PLANS, NUMERAL INDICATES FOOTCANDLES.

F S — FIRE ALARM SYSTEM COMBINATION SPEAKER/STROBE LIGHT UNIT (ADA CODE). ON RISER, LETTER INDICATES STROBE LIGHT CIRCUIT AND NUMERAL INDICATES SPEAKER CIRCUIT. ON FLOOR PLANS NUMERAL INDICATES FOOTCANDLES. "WP" INDICATES WEATHER PROOF. S INDICATES STROBE ONLY UNIT. C INDICATES CEILING MOUNTED.

ER (H) — FIRE ALARM SYSTEM SMOKE DETECTOR. ER INDICATES ELEVATOR RECALL.

ER (D) — FIRE ALARM SYSTEM FIXED TEMPERATURE THERMAL DETECTOR. ER INDICATES ELEVATOR RECALL.

— WALL MOUNTED FIRE ALARM SYSTEM SMOKE DETECTOR.

(D) — 200 DEGREE NON-ADDRESSABLE HEAT DETECTOR IN CRAWL SPACE.

H — FIRE ALARM SYSTEM KITCHEN HOOD FIRE SUPPRESSION SYSTEM.

RA — FIRE ALARM SYSTEM REMOTE ALARM INDICATOR LIGHT. PROVIDE ENGRAVED NAMEPLATES COORDINATE EXACT LOCATION WITH FIRE DEPARTMENT.

RA — FIRE ALARM SYSTEM REMOTE ALARM INDICATOR AND TEST SWITCH. (DUCT SMOKE DETECTORS). PROVIDE ENGRAVED NAMEPLATES. COORDINATE EXACT LOCATION WITH FIRE DEPARTMENT.

DD — FIRE ALARM SYSTEM DUCT SMOKE DETECTOR. FURNISHED AND WIRED BY ELECTRICAL SUBCONTRACTOR AND INSTALLED BY THE HVAC SUBCONTRACTOR.

FS — FIRE ALARM SYSTEM FLOW SWITCH. FURNISHED AND INSTALLED BY FIRE PROTECTION SUBCONTRACTOR AND WIRED BY ELECTRICAL SUBCONTRACTOR.

TS — FIRE ALARM SYSTEM TAMPER SWITCH. FURNISHED AND INSTALLED BY FIRE PROTECTION SUBCONTRACTOR AND WIRED BY ELECTRICAL SUBCONTRACTOR.

PS — FIRE ALARM SYSTEM PRESSURE SWITCH. FURNISHED AND INSTALLED BY FIRE PROTECTION SUBCONTRACTOR AND WIRED BY ELECTRICAL SUBCONTRACTOR.

LP — FIRE ALARM SYSTEM LOW PRESSURE SWITCH. FURNISHED AND INSTALLED BY FIRE PROTECTION SUBCONTRACTOR AND WIRED BY ELECTRICAL SUBCONTRACTOR.

SS — FIRE ALARM SYSTEM SUPERVISORY SWITCH. FURNISHED AND INSTALLED BY FIRE PROTECTION SUBCONTRACTOR AND WIRED BY ELECTRICAL SUBCONTRACTOR.

Z — FIRE ALARM SYSTEM ZONE ADDRESSABLE MODULE (ZAM).

— FIRE ALARM SYSTEM MAGNETIC RECESSED, LOW-PROFILE TYPE DOOR HOLDER. "I" INDICATES FLOOR MOUNTED. COORDINATE LOCATION, ALIGNMENT, AND INSTALLATION WITH THE GENERAL CONTRACTOR, DOOR HARDWARE SUBCONTRACTOR AND ARCHITECT. COORDINATE DIMENSIONS WITH ARCHITECTURAL DETAILS.

B — FIRE ALARM SYSTEM RED STROBE BEACON LIGHT. THE EXACT LOCATION SHALL BE DETERMINED ON THE JOB BY THE ARCHITECT.

KB — KNOX BOX. FURNISH AND INSTALL A RECESS KNOX BOX SERIES 3261 OR APPROVED EQUAL IN ACCORDANCE WITH THE REQUIREMENTS OF THE FIRE DEPARTMENT.

M — MASTER BOX. COORDINATE MASTER BOX WITH FIRE DEPARTMENT.

CM — CARBON MONOXIDE DETECTOR.

PIV — POST INDICATOR VALVE.

LIGHTING FIXTURES

REFER TO ARCHITECTURAL DETAIL DRAWINGS FOR EXACT LOCATION AND MOUNTING HEIGHTS OF LIGHTING FIXTURES.

— CEILING MOUNTED LIGHT OUTLET. LETTER INDICATES SWITCH CONTROL A. NUMERAL INDICATES CIRCUIT NUMBER 1. F FOLLOWED BY A NUMERAL INDICATES FIXTURE TYPE.

— RECESSED, WALL MOUNTED OR PENDANT MOUNTED LIGHTING FIXTURE.

— 2' X 2' RECESSED LIGHTING FIXTURE.

— 2' X 4' RECESSED LIGHTING FIXTURE.

— SURFACE OR PENDANT MOUNTED LIGHTING FIXTURE.

— ASYMMETRIC RECESSED LINEAR LIGHTING FIXTURE. ARROW INDICATES DIRECTION OF FIXTURE.

— LIGHTING TRACK.

— RECESSED WALL WASHER LIGHTING FIXTURE.

— WALL MOUNTED LIGHTING FIXTURE.

— LIGHTING FIXTURE ON EMERGENCY CIRCUIT.

— EXTERIOR POLE MOUNTED LIGHTING FIXTURE.

— WALL MOUNTED EXIT LIGHTING FIXTURE ON EMERGENCY CIRCUIT. ARROW INDICATES DIRECTION OF CHEVRON. "DF" INDICATES DOUBLED FACED. "V" INDICATES VANDAL RESISTANT. "ISA" INDICATES EXIT SIGN WITH INTERNATIONAL SYMBOL OF ACCESSIBILITY.

E DF — CEILING MOUNTED EXIT LIGHTING FIXTURE ON EMERGENCY CIRCUIT.

— SELF CONTAINED EMERGENCY BATTERY LIGHT. LITHONIA ELM2–SD–120/277 OR APPROVED EQUAL CONNECT TO UNSWITCHED SIDE OF ROOM LIGHTING CIRCUIT.

SWITCHES

— SINGLE POLE SWITCH – UPPER LETTER INDICATES SWITCH CONTROL.

— THREE-WAY SWITCH.

— FOUR-WAY SWITCH.

— MOMENTARY CONTACT SWITCHES SHALL BE ARROW HART #1995L WITH AH14 KEYS OR APPROVED EQUAL. PROVIDE TWO KEYS FOR EVERY SWITCH.

— PILOT LIGHT AND SINGLE POLE SWITCH.

— SINGLE POLE DIMMER SWITCH. LUTRON NOVA SERIES #NT–10–277V OR APPROVED EQUAL. DIMMER CONTROLS SHALL BE INSTALLED IN ACCORDANCE WITH THE MANUFACTURER'S INSTALLATION INSTRUCTIONS. MULTI–GANG DEVICE PLATES AND SUFFICIENT NUMBER OF BACKBOXES TO ACCEPT THE DIMMERS WITHOUT DERATING. NO DERATING OF DIMMERS WILL BE ALLOWED.

— INCANDESCENT SINGLE POLE DIMMER SWITCH. LUTRON NOVA SERIES #NT–600, NT–1000, NT–1500, N9–2000 OR APPROVED EQUAL. DIMMER CONTROLS SHALL BE INSTALLED IN ACCORDANCE WITH THE MANUFACTURER'S INSTALLATION INSTRUCTIONS. MULTI–GANG DEVICE PLATES AND SUFFICIENT NUMBER OF BACKBOXES TO ACCEPT THE DIMMERS WITHOUT DERATING. NO DERATING OF DIMMERS WILL BE ALLOWED.

— COMBINATION WALL SWITCH AND OCCUPANCY SENSOR. SENSOR SWITCH NWSXPDT–WH OR APPROVED EQUAL.

— COMBINATION DUAL–LEVEL WALL SWITCH AND OCCUPANCY SENSOR. SENSOR SWITCH NWSXPDT–WH OR APPROVED EQUAL.

2B — 2–BUTTON 2 SCENE LIGHTING CONTROL STATION. SENSOR SWITCH NPODM–2P OR APPROVED EQUAL. FURNISH AND INSTALL 4" SQUARE BOX WITH SINGLE GANG PLASTER RING. ¾" CONDUIT TO ACCESSIBLE CEILING.

4B — 4–BUTTON 4 SCENE LIGHTING CONTROL STATION. SENSOR SWITCH NPODM–4P OR APPROVED EQUAL. FURNISH AND INSTALL 4" SQUARE BOX WITH SINGLE GANG PLASTER RING. ¾" CONDUIT TO ACCESSIBLE CEILING.

DS — DIMMER SWITCH SENSOR SWITCH N–LIGHT NPODM–4S–DX–WH OR APPROVED EQUAL. FURNISH AND INSTALL 4" SQUARE BOX WITH SINGLE GANG PLASTER RING. ¾" CONDUIT TO ACCESSIBLE CEILING.

DS1 — DIMMER SWITCH SENSOR SWITCH N–LIGHT NPODM–DX OR APPROVED EQUAL. FURNISH AND INSTALL 4" SQUARE BOX WITH SINGLE GANG PLASTER RING. ¾" CONDUIT TO ACCESSIBLE CEILING.

DS2 — DIMMER SWITCH SENSOR SWITCH N–LIGHT NPODM–2PDX OR APPROVED EQUAL. FURNISH AND INSTALL 4" SQUARE BOX WITH SINGLE GANG PLASTER RING. ¾" CONDUIT TO ACCESSIBLE CEILING.

DS3 — DIMMER SWITCH SENSOR SWITCH N–LIGHT NPOD–TOUCH OR APPROVED EQUAL. FURNISH AND INSTALL 4" SQUARE BOX WITH SINGLE GANG PLASTER RING. ¾" CONDUIT TO ACCESSIBLE CEILING.

KS — LIGHTING CONTROL SYSTEM KEYSWITCH.

LIGHTING SENSORS

OS — RECESSED CEILING MOUNTED DUAL TECHNOLOGY LIGHTING SENSOR – SENSOR SWITCH NCM–PDT–9 OR APPROVED EQUAL.

— WALL/CEILING MOUNTED DUAL TECHNOLOGY LIGHTING SENSOR WITH WALL BRACKET – SENSOR SWITCH NWV–16–BR KIT OR APPROVED EQUAL. MOUNTED HIGH ON WALL NEAR CEILING FOR UNOBSTRUCTED VIEW. REFER TO SPECIFICATIONS.

— CEILING MOUNTED DAY LIGHT LIGHTING CEILING SENSOR – SENSOR SWITCH N–CMADC OR APPROVED EQUAL. "H" INDICATES HIGH MOUNT GYMNASIUM PHOTOCELL.

— HIGH MOUNT GYMNASIUM OCCUPANCY SENSOR MOUNTED ON BOTTOM OF TRUSS WITH WIRE GUARD. OCCUPANCY SENSOR TO OPERATE HI/LOW SYSTEM FOR FIXTURES SHALL BE SENSOR SWITCH N–CM6 OR APPROVED EQUAL. EXACT LOCATION TO BE DETERMINED BY ARCHITECT.

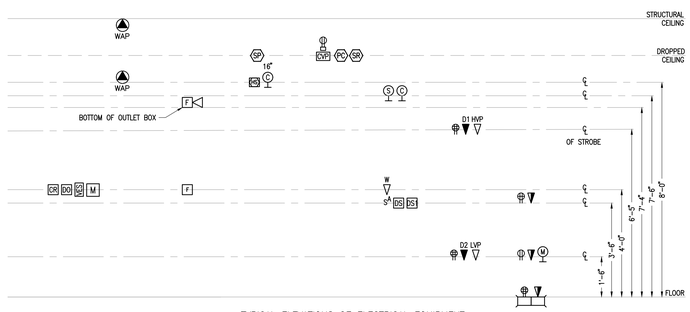

TYPICAL ELEVATIONS OF ELECTRICAL EQUIPMENT

N.T.S.

NOTES

1 – THESE ELEVATIONS ARE TYPICAL FOR ALL DEVICES AS INDICATED UNLESS OTHERWISE NOTED BY THE ARCHITECT. REFER TO ARCHITECTURAL DRAWINGS FOR EXACT LOCATIONS.

2 – PRE–K AND KINDERGARTEN BATHROOMS – LIGHTING SWITCHES AND VACANCY SENSORS SHALL BE MOUNTED AT 3'–0" AFF.

AMESBURY ELEMENTARY SCHOOL

AMESBURY, MA

DINISCO DESIGN architects + planners
99 Chauncy Street, Suite 901
Boston, MA 02111
(617) 426-2858

DGT Associates
Surveying & Engineers
1071 Worcester Road
Framingham, MA 01701
(508) 879-0030

Brown Sardina, Inc.
Landscape Architects
24 Roland Street
Boston, MA 02129
(617) 482-4703

Foley Buhl Roberts & Assoc., Inc.
Structural Engineers
2150 Washington Street
Newton, MA 02462
(617) 527-9600

Crabtree McGrath Assoc., Inc.
Food Service Consultants
161 West Main Street
Georgetown, MA 01833
(978) 352-8500

VAV International, Inc.
Mechanical Engineers
400 West Cummings Park S. 4700
Woburn, MA 01801
(781) 935-7228

Thompson Engineering Company, Inc.
Electrical Engineers
89 Newbury Street, Suite 103
Danvers, MA 01923
(617) 866-9066

EdVance Technology Design, Inc.
Technology Consultants
300 Brickstone Square, Suite 201
Andover, MA 01880
(978) 256-9900

KEY PLAN

NORTH ARROW — STAMP

Date: 21 August 2020

Drawn By: JM, TD, EG

Scale: N.T.S.

Revisions

Number	Date	Description

90% COST ESTIMATE SET

Symbol List

**10.0.

VIDEO SURVEILLANCE CAMERA SYMBOLS

POWER REQUIRED	SYMBOL	DESCRIPTION	TYPICAL LOCATION	BACK BOX	NOTES
120V PoE		CCTV – IP CAMERA, INTERIOR, PENDANT DOME IP CAMERA SYSTEM FURNISHED AND INSTALLED BY SECTION 281000 SECURITY SYSTEMS. CAMERA IP CABLING BY DIVISION 270100. CABLE PATHWAYS AND BACKBOXES TO SUPPORT CAMERAS BY ELECTRICAL CONTRACTOR. COORDINATE ALL DEVICE REQUIREMENTS WITH SECTION 281000. REFER TO REFLECTED CEILING, LIGHTING, AND SECURITY PLANS AND COORDINATE ALL CAMERA LOCATIONS WITH ARCHITECT AND SECTION 281000 BEFORE INSTALLATION. ELECTRICAL CONTRACTOR TO PROVIDE METAL FLEX CONDUIT OR LIQUID TIGHT CONDUIT AS REQUIRED.	INTERIOR 12" TO 14" A.F.G. TYPICAL.	N/A	REFER TO NOTE I
NONE PoE		CCTV – IP CAMERA, INTERIOR, CEILING DOME IP CAMERA SYSTEM FURNISHED AND INSTALLED BY SECTION 281000 SECURITY SYSTEMS. CAMERA IP CABLING BY DIVISION 270100. CABLE PATHWAYS AND BACKBOXES TO SUPPORT CAMERAS BY ELECTRICAL CONTRACTOR. COORDINATE ALL DEVICE REQUIREMENTS WITH SECTION 281000. REFER TO REFLECTED CEILING, LIGHTING, AND SECURITY PLANS AND COORDINATE ALL CAMERA LOCATIONS WITH ARCHITECT AND SECTION 281000 BEFORE INSTALLATION. ELECTRICAL CONTRACTOR TO PROVIDE METAL FLEX CONDUIT OR LIQUID TIGHT CONDUIT AS REQUIRED.	ON CEILING.	N/A	REFER TO NOTE I
NONE PoE	WP	CCTV – IP CAMERA, EXTERIOR, CEILING DOME "WP" INDICATES CAMERA WITH WEATHERPROOF DOME ENCLOSURE. "C" INDICATES CORNER MOUNT. "PTZ" INDICATES PAN/TILT/ZOOM. IP CAMERA SYSTEM FURNISHED AND INSTALLED BY SECTION 281000 SECURITY SYSTEMS. CAMERA IP CABLING BY DIVISION 270100. CABLE PATHWAYS AND BACKBOXES TO SUPPORT CAMERAS BY ELECTRICAL CONTRACTOR. COORDINATE ALL DEVICE REQUIREMENTS WITH SECTION 281000. REFER TO REFLECTED CEILING, LIGHTING, AND SECURITY PLANS AND COORDINATE ALL CAMERA LOCATIONS WITH ARCHITECT AND SECTION 281000 BEFORE INSTALLATION. ELECTRICAL CONTRACTOR TO PROVIDE METAL FLEX CONDUIT OR LIQUID TIGHT CONDUIT AS REQUIRED.	ON CEILING.	N/A	REFER TO NOTE I
120V PoE	WP	CCTV – IP CAMERA, EXTERIOR, PENDANT DOME "WP" INDICATES CAMERA WITH WEATHERPROOF DOME ENCLOSURE. "C" INDICATES CORNER MOUNT. "PTZ" INDICATES PAN/TILT/ZOOM. IP CAMERA SYSTEM FURNISHED AND INSTALLED BY SECTION 281000 SECURITY SYSTEMS. CAMERA IP CABLING BY DIVISION 270100. CABLE PATHWAYS AND BACKBOXES TO SUPPORT CAMERAS BY ELECTRICAL CONTRACTOR. COORDINATE ALL DEVICE REQUIREMENTS WITH SECTION 281000. COORDINATE ALL CAMERA LOCATIONS WITH ARCHITECT AND SECTION 281000 BEFORE INSTALLATION. ELECTRICAL CONTRACTOR TO PROVIDE METAL FLEX CONDUIT OR LIQUID TIGHT CONDUIT AS REQUIRED.	EXTERIOR 12" TO 14" A.F.G. TYPICAL.	N/A	REFER TO NOTE I

NOTES – REFER TO DIV 28 SPECIFICATIONS.
180 = TWO-SENSOR 180 DEGREE CAMERA.
270 = THREE-SENSOR 270 DEGREE CAMERA.
360 = FOUR-SENSOR 360 DEGREE CAMERA.

IP VIDEO SURVEILLANCE CABLING SYSTEM SYMBOLS

POWER REQUIRED	SYMBOL	DESCRIPTION	TYPICAL LOCATION	BACK BOX / FACEPLATE	NOTES
NONE FOR ABOVE CEILING OUTLETS 120V AT POLE FOR POLE MOUNTED CAMERA	CCTV	CCTV – UTP DATA FOR CEILING CCTV OR FIBER FOR POLE MOUNTED CAMERAS: CEILING MOUNTED CAMERAS BY DIVISION 281000 SECURITY CONTRACTOR. POLE MOUNTED CAMERAS REFER TO ELECTRICAL FLOOR PLANS AND SITE DRAWINGS. COORDINATE EXACT LOCATIONS AND CONNECTOR TYPE AT EACH END WITH CCTV SYSTEM CONTRACTOR AND ARCHITECT BEFORE INSTALLATION. CAMERA EQUIPMENT AND ALL LOW VOLTAGE CABLING EXCEPT CAT 6A UTP CABLING SHALL BE PROVIDED BY DIVISION 281000. CAT 6A UTP CABLING FOR CAMERAS SHALL BE PROVIDED BY DIVISION 270100. ELECTRICAL CONTRACTOR SHALL FURNISH AND INSTALL SINGLE GANG BACK BOX. FURNISH AND INSTALL REQUIRED CONDUIT. FURNISH AND INSTALL BUSHINGS AT EACH END OF THE CONDUIT. REFER TO SPECIFICATIONS AND RISER DIAGRAMS.	ABOVE CEILING.		REFER TO NOTE I
NONE	CCTV	CCTV – FLUSH WALL MOUNTED CCTV DATA OUTLET BY DIVISION 281000 SECURITY CONTRACTOR: COORDINATE EXACT LOCATIONS AND ELEVATIONS WITH ARCHITECT BEFORE INSTALLATION. CAMERA EQUIPMENT AND ALL LOW VOLTAGE CABLING EXCEPT CAT 6A UTP CABLING SHALL BE PROVIDED BY DIVISION 281000. CAT 6A UTP CABLING FOR CAMERAS SHALL BE PROVIDED BY DIVISION 270100. ELECTRICAL CONTRACTOR SHALL FURNISH AND INSTALL 4" SQUARE BOX WITH SINGLE GANG PLASTER RING. FURNISH AND INSTALL A 1" CONDUIT FROM OUTLET BOX TO THE NEAREST ACCESSIBLE CEILING CAVITY. FURNISH AND INSTALL BUSHINGS AT EACH END OF THE CONDUIT. REFER TO SPECIFICATIONS AND RISER DIAGRAMS.	COORDINATE LOCATION AND ELEVATION WITH ARCHITECT PRIOR TO INSTALLATION.		REFER TO NOTE I

MISC. BACK BOXES, FLOOR BOXES, BRACKETS AND ENCLOSURE SYMBOLS

POWER REQUIRED	SYMBOL	DESCRIPTION	TYPICAL LOCATION	BACK BOX / FACEPLATE	NOTES
120 VAC 2-DUPLEX MINIMUM	DX	INDICATES TELECOMMUNICATIONS OUTLETS MOUNTED IN COMBINATION ELECTRICAL / LOW VOLTAGE WIREMOLD RFB4, RFB9, OR RFB11 FLOOR BOX AS REQUIRED. TELECOMMUNICATIONS CONNECTOR TYPES AS INDICATED BY TELECOMMUNICATION SYMBOLS. FLOOR BOX BY E.C. REFER TO FLOOR BOX SYMBOL ON DWG 10.0.01. ELECTRICAL CONTRACTOR TO FURNISH AND INSTALL MIN. TWO 1" CONDUITS, UNLESS OTHERWISE NOTED, TO ACCESSIBLE CEILING ABOVE ROOM.	IN FLOOR.	N/A	REFER TO NOTE A
NONE	WE WP	WE – WALL ENCLOSURE FOR WIRELESS ACCESS POINT, NONMETALLIC: WIREMOLD #NMAPME OR EQUAL. WALL MOUNTED LOCKABLE ENCLOSURE PROVIDED BY TELECOMMUNICATIONS CONTRACTOR TO HOUSE PRESENT/FUTURE WIRELESS ACCESS POINT DEVICE. ENCLOSURE INSTALLED OVER WIRELESS ACCESS POINT (WAP) OUTLET. WIRELESS ACCESS POINT DEVICE PROVIDED BY OWNER UNDER SEPARATE CONTRACT (N.I.C.). WP = WEATHER PROOF ENCLOSURE	WALL MOUNTED OVER "WAP" OUTLET.	N/A	REFER TO NOTE G, H
NONE	C	C – CAMERA INPUT PLATE ELECTRICAL CONTRACTOR SHALL FURNISH AND INSTALL 4" SQUARE BOX WITH SINGLE GANG PLASTER RING AND TWO 1" CONDUITS FROM OUTLET BOX TO CAFETERIA SOUND EQUIPMENT RACK, WITH BUSHINGS AT EACH END OF THE CONDUIT. CABLE AND FACEPLATE CONNECTIONS BY DIVISION 274000	WALL MOUNTED.	SINGLE GANG WITH CUSTOM FACEPLATE BY 274000	REFER TO NOTE E

PA / INTERCOM SYSTEM SYMBOLS

POWER REQUIRED	SYMBOL	DESCRIPTION	TYPICAL LOCATION	BACK BOX ENCLOSURE	NOTES
NONE	SP	PA / INTERCOM SPEAKER, FLUSH CEILING MOUNTED ELECTRICAL CONTRACTOR SHALL INSTALL SPEAKER BACKBOX. FURNISH AND INSTALL A ¾" CONDUIT FROM BOX TO THE NEAREST ACCESSIBLE CEILING CAVITY. FURNISH AND INSTALL BUSHINGS AT EACH END OF THE CONDUIT. REFER TO SPECIFICATIONS AND RISER DIAGRAMS. SPEAKER BACKBOX FURNISHED BY COMMUNICATION SUBCONTRACTOR.	ON CEILING	SPECIAL	REFER TO NOTE C
NONE	SP S	PA / INTERCOM SPEAKER, SURFACE CEILING MOUNTED ELECTRICAL CONTRACTOR SHALL INSTALL SPEAKER BACKBOX. FURNISH AND INSTALL A ¾" CONDUIT FROM BOX TO THE NEAREST ACCESSIBLE CEILING CAVITY. FURNISH AND INSTALL BUSHINGS AT EACH END OF THE CONDUIT. REFER TO SPECIFICATIONS AND RISER DIAGRAMS. SPEAKER BACKBOX FURNISHED BY COMMUNICATION SUBCONTRACTOR.	ON CEILING	SPECIAL	REFER TO NOTE C
NONE	SP V	PA / PAGING SPEAKER WITH BUILT IN VOLUME CONTROL, SURFACE CEILING MOUNTED ELECTRICAL CONTRACTOR SHALL INSTALL SPEAKER BACKBOX. FURNISH AND INSTALL A ¾" CONDUIT FROM BOX TO THE NEAREST ACCESSIBLE CEILING CAVITY. FURNISH AND INSTALL BUSHINGS AT EACH END OF THE CONDUIT. REFER TO SPECIFICATIONS AND RISER DIAGRAMS. SPEAKER BACKBOX FURNISHED BY COMMUNICATION SUBCONTRACTOR.	ON CEILING	SPECIAL	REFER TO NOTE C
NONE	SP	PA/INTERCOM RECESSED SPEAKER, FLUSH WALL MOUNTED ELECTRICAL CONTRACTOR SHALL INSTALL SPEAKER BACKBOX. FURNISH AND INSTALL A ¾" CONDUIT FROM BOX TO THE NEAREST ACCESSIBLE CEILING CAVITY. FURNISH AND INSTALL BUSHINGS AT EACH END OF THE CONDUIT. REFER TO SPECIFICATIONS AND RISER DIAGRAMS. SPEAKER BACKBOX FURNISHED BY COMMUNICATION SUBCONTRACTOR.	96" A.F.F. MIN. COORDINATE W/ ARCHITECT	SPECIAL	REFER TO NOTE C
NONE	SP HS	PA/INTERCOM AND PAGING RECESSED HORN SPEAKER, FLUSH WALL MOUNTED ELECTRICAL CONTRACTOR SHALL INSTALL SPEAKER BACKBOX. FURNISH AND INSTALL A ¾" CONDUIT FROM BOX TO THE NEAREST ACCESSIBLE CEILING CAVITY. FURNISH AND INSTALL BUSHINGS AT EACH END OF THE CONDUIT. REFER TO SPECIFICATIONS AND RISER DIAGRAMS. SPEAKER BACKBOX FURNISHED BY COMMUNICATION SUBCONTRACTOR. WP = WEATHER PROOF SPEAKER.	96" A.F.F. MIN. COORDINATE W/ ARCHITECT	SPECIAL	REFER TO NOTE C
NONE	CS	LOCAL PA/INTERCOM SPEAKER CALL SWITCH. ELECTRICAL CONTRACTOR SHALL FURNISH AND INSTALL 4" SQUARE BOX WITH SINGLE GANG PLASTER RING. FURNISH AND INSTALL ONE ¾" CONDUITS FROM OUTLET BOX TO THE NEAREST ACCESSIBLE CEILING CAVITY. FURNISH AND INSTALL BUSHINGS AT EACH END OF THE CONDUIT. REFER TO SPECIFICATIONS AND RISER DIAGRAMS.	48" A.F.F.	TWO GANG	REFER TO NOTE C
NONE	IMS	PA/INTERCOM MASTER STATION CONSOLE IMS – INDICATES PA/INTERCOM MASTER STATION CONSOLE LOCATION. VOICE CONNECTOR IN DESIGNATED WORK AREA OUTLET CABLED TO PA/INTERCOM SYSTEM IN HEAD END ROOM. ELECTRICAL CONTRACTOR SHALL FURNISH AND INSTALL 4" SQUARE BOX WITH SINGLE GANG PLASTER RING. FURNISH AND INSTALL ONE 1" CONDUIT FROM OUTLET BOX TO THE NEAREST ACCESSIBLE CEILING CAVITY. FURNISH AND INSTALL BUSHINGS AT EACH END OF THE CONDUITS. REFER TO SPECIFICATIONS AND RISER DIAGRAMS.	18" A.F.F.	TWO GANG	REFER TO NOTE C
NONE	VC	LOCAL SOUND SYSTEM VOLUME CONTROL ELECTRICAL CONTRACTOR SHALL FURNISH AND INSTALL RACO #254 OR APPROVED EQUAL FOR MOUNTING LOCAL SOUND SYSTEM BIAMP TEC-11. FURNISH AND INSTALL ONE 1" CONDUITS FROM OUTLET BOX TO THE LOCAL SOUND SYSTEM CABINET FOR THE SPACE. FURNISH AND INSTALL BUSHINGS AT EACH END OF THE CONDUIT. REFER TO SPECIFICATIONS AND RISER DIAGRAMS.	48" A.F.F.	TWO GANG	REFER TO NOTE C

CLOCK SYSTEM SYMBOLS

POWER REQUIRED	SYMBOL	DESCRIPTION	TYPICAL LOCATION	BACK BOX / FACEPLATE	NOTES
NONE	X C	WALL MOUNTED ANALOG CLOCK PER SECTION 275000. X=SIZE (16" FOR 16" DIAMETER ANALOG CLOCK. ALL CLOCKS SHOWN WITHOUT 'X' ARE 12" DIAMETER CLOCKS). ELECTRICAL CONTRACTOR SHALL FURNISH AND INSTALL 4" SQUARE BOX WITH SINGLE GANG PLASTER RING.	96" A.F.F.	TWO GANG	REFER TO NOTE D

EXTERIOR DOOR AUDIO / VIDEO CONTROL SYSTEM SYMBOLS

POWER REQUIRED	SYMBOL	DESCRIPTION	TYPICAL LOCATION	BACK BOX / FACEPLATE	NOTES
NONE	VES	VES – VIDEO/AUDIO ENTRANCE STATION: LOCATED AT EXTERIOR DOOR. (SEE SPECIFICATIONS FOR DETAILS.) ELECTRICAL CONTRACTOR SHALL INSTALL CUSTOM BACK BOX PROVIDED BY DISTRIBUTED COMMUNICATIONS SYSTEMS CONTRACTOR DIVISION 275000 WITH 1" CONDUIT FROM BACK BOX TO THE NEAREST ACCESSIBLE CEILING CAVITY. FURNISH AND INSTALL BUSHINGS AT EACH END OF THE CONDUIT. REFER TO SPECIFICATIONS AND RISER DIAGRAMS. DEVICE AND CABLING BY DISTRIBUTED COMMUNICATIONS CONTRACTOR DIVISION 275000.	48" A.F.F.	TWO GANG	REFER TO NOTE F
120 VAC DUPLEX RECEPTACLE	VMS	VMS – VIDEO/AUDIO MASTER STATION: SEE FLOOR PLAN FOR LOCATION (SEE SPECIFICATIONS FOR DETAILS.) ELECTRICAL CONTRACTOR SHALL FURNISH AND INSTALL 4" SQUARE BOX WITH TWO GANG PLASTER RING. FURNISH AND INSTALL A 1" CONDUIT FROM OUTLET BOX TO THE NEAREST ACCESSIBLE CEILING CAVITY. FURNISH AND INSTALL BUSHINGS AT EACH END OF THE CONDUIT. REFER TO SPECIFICATIONS AND RISER DIAGRAMS. DEVICE AND CABLING BY DISTRIBUTED COMMUNICATIONS CONTRACTOR DIVISION 275000.	WALL 48" A.F.F. OR DESK 18" A.F.F.	TWO GANG	REFER TO NOTE F

ACCESS CONTROL SYSTEM SYMBOLS

POWER REQUIRED	SYMBOL	DESCRIPTION	LOCATION	BACK BOX / FACEPLATE	NOTES
NONE	CR	DOOR PROXIMITY/CARD READER EQUIPMENT AND LOW VOLTAGE CABLING PROVIDED BY DIVISION 281000 CONTRACTOR. ELECTRONIC LATCH AND LATCH POWER SUPPLY BY DOOR HARDWARE VENDOR. ELECTRICAL CONTRACTOR SHALL FURNISH AND INSTALL 4" SQUARE BOX WITH TWO GANG PLASTER RING AND BLANK FACEPLATE. FURNISH AND INSTALL A 1" CONDUITS FROM OUTLET BOX TO THE NEAREST ACCESSIBLE CEILING CAVITY. FURNISH AND INSTALL BUSHINGS AT EACH END OF THE CONDUITS. REFER TO SPECIFICATIONS AND RISER DIAGRAMS. ELECTRICAL CONTRACTOR TO PROVIDE 120V CIRCUIT TO EACH DOOR. POWER SUPPLY FROM STANDBY POWER PANEL.	48" A.F.F.	ONE GANG	REFER TO NOTE K
NONE	DR	SECURITY SYSTEM DURESS BUTTON LOCKDOWN SWITCH. EXACT LOCATIONS BY THE ARCHITECT IN FIELD. DURESS BUTTON LOCKDOWN SWITCH SHALL PROVIDE LOCKDOWN OPERATION TO RELEASE ALL FIRE DOORS HELD OPEN BY THE FIRE ALARM SYSTEM. WITH THE ACTIVATION OF THIS BUTTON, THE SECURITY SYSTEM SHALL RELEASE ALL DOORS, ALL DOORS SHALL LOCK CLOSE, AND SECURITY SYSTEM SHALL TRANSMIT A 911 ALARM TO A PRE-PROGRAMMED PHONE NUMBER. REFER TO THE SECURITY SPECIFICATIONS FOR DETAILS.	--	--	--
NONE	LR	SECURITY SYSTEM LOCKDOWN CARD READER. COORDINATE LOCATION WITH THE GENERAL CONTRACTOR, DOOR HARDWARE SUBCONTRACTOR, AND ARCHITECT.	--	--	--

TELECOMMUNICATIONS WORK AREA OUTLET SYMBOLS

POWER REQUIRED	SYMBOL	DESCRIPTION	TYPICAL LOCATION	TYPICAL FACEPLATE	NOTES
120 VAC ONE DUPLEX RECEPTACLE FOR EACH DATA DROP	DX	DX – DATA OUTLET: RJ-45, CAT. 6A, 8-POSITION CONNECTORS FOR DATA CABLED TO DATA PATCH PANEL IN NEAREST WIRE CENTER. X = NUMBER OF DATA JACKS – (1, 2, 3, 4, 5, 6). ELECTRICAL CONTRACTOR SHALL FURNISH AND INSTALL 4" SQUARE BOX WITH SINGLE GANG PLASTER RING. FOR D1 THROUGH D3 OUTLETS FURNISH AND INSTALL A 1" CONDUIT FROM OUTLET BOX TO THE NEAREST ACCESSIBLE CEILING CAVITY. FOR D4 THROUGH D6 OUTLETS FURNISH AND INSTALL A 1¼" CONDUIT FROM OUTLET BOX TO THE NEAREST ACCESSIBLE CEILING CAVITY. FURNISH AND INSTALL BUSHINGS AT EACH END OF THE CONDUIT. REFER TO SPECIFICATIONS AND RISER DIAGRAMS.	18" A.F.F. OR AS NOTED. REFER TO DWGS.		REFER TO NOTE A
120 VAC DUPLEX RECEPTACLE	TD (F)	TD – TEL/DATA WORK AREA OUTLET: ONE (1) RJ-45, CAT. 6A, 8-POSITION CONNECTOR FOR VOICE CABLED TO VOICE PATCH PANEL IN NEAREST WIRE CENTER AND PATCHED TO VOICE RISER PATCH PANEL. ONE (1) RJ-45, CAT. 6A, 8-POSITION CONNECTOR FOR DATA CABLED TO DATA PATCH PANEL IN NEAREST WIRE CENTER. (F) = ONE (1) VOICE CABLE AND JACK FOR DEDICATED FAX LINE. EQUIPMENT BY OWNER UNDER SEPARATE CONTRACT (N.I.C.). ELECTRICAL CONTRACTOR SHALL FURNISH AND INSTALL 4" SQUARE BOX WITH SINGLE GANG PLASTER RING. FURNISH AND INSTALL A 1" CONDUIT FROM OUTLET BOX TO THE NEAREST ACCESSIBLE CEILING CAVITY. FURNISH AND INSTALL BUSHINGS AT EACH END OF THE CONDUIT. REFER TO SPECIFICATIONS AND RISER DIAGRAMS.	18" A.F.F. OR AS NOTED. REFER TO DWGS.		REFER TO NOTES A, B
NONE	W	"VoIP" WALL TELEPHONE OUTLET: ONE (1) CAT. 6A, RJ-45 8A-POSITION CONNECTOR FOR DATA CABLED TO DATA PATCH PANEL IN NEAREST WIRE CENTER. TELEPHONE EQUIPMENT BY OWNER UNDER SEPARATE CONTRACT (N.I.C.). ELECTRICAL CONTRACTOR SHALL FURNISH AND INSTALL 4" SQUARE BOX WITH SINGLE GANG PLASTER RING. FURNISH AND INSTALL A 1" CONDUIT FROM OUTLET BOX TO THE NEAREST ACCESSIBLE CEILING CAVITY. FURNISH AND INSTALL BUSHINGS AT EACH END OF THE CONDUIT. REFER TO SPECIFICATIONS AND RISER DIAGRAMS.	48" A.F.F.		REFER TO NOTES A, B
NONE	DPI	DPI – "VoIP" DOOR SPEAKER PHONE INTERCOM OUTLET: ONE (1) CAT. 6A, RJ-45 8A-POSITION CONNECTOR FOR DATA CABLED TO DATA PATCH PANEL IN NEAREST WIRE CENTER. EQUIPMENT BY OWNER UNDER SEPARATE CONTRACT (N.I.C.). TELEPHONE EQUIPMENT BY OWNER UNDER SEPARATE CONTRACT (N.I.C.). ELECTRICAL CONTRACTOR SHALL FURNISH AND INSTALL 4" SQUARE BOX WITH TWO GANG PLASTER RING. FURNISH AND INSTALL A 1" CONDUIT FROM OUTLET BOX TO THE NEAREST ACCESSIBLE CEILING CAVITY. FURNISH AND INSTALL BUSHINGS AT EACH END OF THE CONDUIT. REFER TO SPECIFICATIONS AND RISER DIAGRAMS.	48" A.F.F.	TWO GANG BLANK SS FACEPLATE	REFER TO NOTE A
NONE	X	DEDICATED TELEPHONE OUTLET: ONE (1) CAT. 6A, RJ-45 CONNECTOR FOR DEDICATED PHONE LINE CABLED TO VOICE PATCH PANEL IN NEAREST WIRE CENTER AND PATCHED TO VOICE RISER PATCH PANEL. (X) = PHONE LINE TYPE: E = DEDICATED EMERGENCY ELEVATOR LINE. F = DEDICATED FAX LINE. M = DEDICATED MODEM LINE. ELECTRICAL CONTRACTOR SHALL FURNISH AND INSTALL 4" SQUARE BOX WITH SINGLE GANG PLASTER RING. FURNISH AND INSTALL A 1" CONDUIT FROM OUTLET BOX TO THE NEAREST ACCESSIBLE CEILING CAVITY. FURNISH AND INSTALL BUSHINGS AT EACH END OF THE CONDUIT. REFER TO SPECIFICATIONS AND RISER DIAGRAMS.	18" A.F.F.		REFER TO NOTE B
NONE	WAP	WAP – WIRELESS ACCESS POINT DATA OUTLET: INSTALLED ABOVE CEILING IN CONJUNCTION WITH WIRELESS ACCESS POINT (N.I.C.). TWO (2) RJ-45, CAT. 6A, 8-POSITION CONNECTOR FOR DATA CABLED TO DATA PATCH PANEL IN THE NEAREST WIRE CENTER. ELECTRICAL CONTRACTOR SHALL FURNISH AND INSTALL 4" SQUARE BOX WITH SINGLE GANG PLASTER RING. FURNISH AND INSTALL A 1" CONDUIT FROM OUTLET BOX TO THE NEAREST ACCESSIBLE CEILING CAVITY. FURNISH AND INSTALL BUSHINGS AT EACH END OF THE CONDUIT. REFER TO SPECIFICATIONS AND RISER DIAGRAMS.	ABOVE CEILING IN ACT AREAS. REFER TO DWGS. FOR LOCATIONS.		REFER TO NOTES A, H
NONE	WAP WP	WAP – WIRELESS ACCESS POINT DATA OUTLET: INSTALLED IN CONJUNCTION WITH WIRELESS ACCESS POINT WALL ENCLOSURE ("WE"). TWO (2) RJ-45, CAT. 6A, 8-POSITION CONNECTOR FOR DATA CABLED TO DATA PATCH PANEL IN THE NEAREST WIRE CENTER. WP = WEATHER PROOF ENCLOSURE ELECTRICAL CONTRACTOR SHALL FURNISH AND INSTALL 4" SQUARE BOX WITH SINGLE GANG PLASTER RING. FURNISH AND INSTALL A 1" CONDUIT FROM OUTLET BOX TO THE NEAREST ACCESSIBLE CEILING CAVITY. FURNISH AND INSTALL BUSHINGS AT EACH END OF THE CONDUIT. REFER TO SPECIFICATIONS AND RISER DIAGRAMS.	FLUSH WALL OUTLET 12" O.C. BELOW CEILING OR STRUCTURE		REFER TO NOTES A, G
120 VAC ONE DUPLEX RECEPTACLE	VH	VH – HIGH VIDEO OUTLET: ONE (1) RJ-45, CAT. 6A, 8-POSITION CONNECTOR FOR DATA CABLED TO PATCH PANEL IN THE NEAREST WIRE CENTER. ELECTRICAL CONTRACTOR SHALL FURNISH AND INSTALL 4" SQUARE BOX WITH SINGLE GANG PLASTER RING. FURNISH AND INSTALL A 1" CONDUIT FROM OUTLET BOX TO THE NEAREST ACCESSIBLE CEILING CAVITY. FURNISH AND INSTALL BUSHINGS AT EACH END OF THE CONDUIT. REFER TO SPECIFICATIONS AND RISER DIAGRAMS.	96" A.F.F. OR AS NOTED. REFER TO DWGS.		REFER TO NOTE A

LOCAL AUDIOVISUAL PRESENTATION SYSTEM SYMBOLS

POWER REQUIRED	SYMBOL	DESCRIPTION	LOCATION	BACK BOX / FACEPLATE	NOTES
120 VAC QUAD RECEPTACLE	FVS	FVS – FUTURE VIDEO PRESENTATION SOURCE OUTLET: EMPTY BACK BOX AND TWO (2) 1¼" CONDUITS TO NEAREST SOUND SYSTEM RACK WITH CUSTOM STAINLESS STEEL FACEPLATE. CABLING AND FACE PLATE CONNECTIONS BY SECTION 274000. ELECTRICAL CONTRACTOR SHALL FURNISH AND INSTALL 4" SQUARE BOX WITH TWO GANG PLASTER RING. FURNISH AND INSTALL TWO 1¼" CONDUITS FROM OUTLET BOX TO THE MUSIC ROOM SOUND SYSTEM RACK IN STORAGE 111B. FURNISH AND INSTALL BUSHINGS AT EACH END OF THE CONDUIT. FURNISH AND INSTALL BLANK FACEPLATE.	18" A.F.F. OR AS NOTED ON DWGS.	TWO GANG CABLE & CONNECTIONS PER SECTION 274000	REFER TO NOTE E
120 VAC ONE QUAD RECEPTACLE	MVP MVP	MVP – HIGH VIDEO PRESENTATION OUTLET FOR WALL MOUNTED ULTRA SHORT THROW PROJECTOR: MVP – MONITOR VIDEO PORT OUTLET: FUTURE AUDIOVISUAL AND USB CABLING PROVIDED BY OWNER UNDER SEPARATE CONTRACT. ELECTRICAL CONTRACTOR SHALL FURNISH AND INSTALL 4" SQUARE BOX WITH TWO GANG PLASTER RING. FURNISH AND INSTALL TWO 1¼" CONDUITS FROM OUTLET BOX TO THE NEAREST ACCESSIBLE CEILING CAVITY. FURNISH AND INSTALL BUSHINGS AT EACH END OF THE CONDUITS.	MONITOR OR PROJECTOR. REFER TO DETAIL DWGS.	BLANK FACEPLATE	REFER TO NOTE E
120 VAC QUAD RECEPTACLE	LVP	LVP – LOW VIDEO PRESENTATION OUTLET: FUTURE AUDIOVISUAL AND USB CABLING PROVIDED BY OWNER UNDER SEPARATE CONTRACT. ELECTRICAL CONTRACTOR SHALL FURNISH AND INSTALL 4" SQUARE BOX WITH TWO GANG PLASTER RING AND BLANK FACEPLATE. FURNISH AND INSTALL TWO 1¼" CONDUITS FROM OUTLET BOX TO THE NEAREST ACCESSIBLE CEILING CAVITY. FURNISH AND INSTALL BUSHINGS AT EACH END OF THE CONDUITS. FURNISH AND INSTALL BLANK FACEPLATE.	18" A.F.F.	TWO GANG BLANK FACEPLATE	REFER TO NOTE E
NONE	CVP	CVP – CEILING VIDEO PROJECTOR OUTLET: PROJECTOR WITH SHORT THROW LENS SUSPENDED IN ACT CEILING WITH PROJECTOR LENS AS REQUIRED BY SECTION 274000. TWO (2) RJ-45, CAT 6, 8-POSITION CONNECTORS FOR DATA CABLED TO THE NEAREST WIRE CENTER. ELECTRICAL CONTRACTOR SHALL FURNISH AND INSTALL 4" SQUARE BOX WITH SINGLE GANG PLASTER RING. FURNISH AND INSTALL A 1 ¾" CONDUIT FROM OUTLET BOX TO THE SOUND SYSTEM CABINET. FURNISH INSULATING BUSHINGS AT EACH END OF THE CONDUIT. REFER TO SPECIFICATIONS AND RISER DIAGRAMS.	MOUNTED ABOVE CEILING. REFER TO DWGS.		REFER TO NOTES A, E

SPEECH REINFORCEMENT SYSTEM SYMBOLS

POWER REQUIRED	SYMBOL	DESCRIPTION	LOCATION	BACK BOX / FACEPLATE	NOTES
120 VAC	SR	RECESSED CEILING MOUNTED SPEECH REINFORCEMENT SYSTEM SPEAKER MODULE FURNISHED AND INSTALLED BY DIVISION 274000 AV CONTRACTOR. PROVIDE CABLE BETWEEN ROOM PA SPEAKER AND SPEECH REINFORCEMENT SYSTEM MODULE FOR PA OVERRIDE. ELECTRICAL CONTRACTOR TO FURNISH AND INSTALL 120V HARDWIRED CIRCUIT TO SPEECH REINFORCEMENT SYSTEM MODULE. CONNECT TO 120V CIRCUIT SERVING THE RECEPTACLE AT THE ROOM MVP OUTLET LOCATION.	ON CEILING.	N/A	REFER TO NOTE J

REFER TO SPECIFICATIONS FOR THE SCOPE OF WORK.

NOTE A

THE COMMUNICATIONS SYSTEMS DIVISION 270100 CONTRACTOR SHALL PROVIDE ALL LOW VOLTAGE WIRING, DEVICE BRACKETS, CONNECTORS, FACEPLATES, TERMINATION AND MATERIALS FOR THE DATA/IP NETWORK INCLUDING UTP AND FIBER CABLING, DATA OUTLETS, VOICE OVER IP OUTLETS, AND VIDEO OVER IP OUTLETS.

THE COMMUNICATIONS SYSTEMS DIVISION 270100 CONTRACTOR SHALL PROVIDE EQUIPMENT RACKS FOR THE DATA/IP CABLING.

THE ELECTRICAL CONTRACTOR FOR THE PROJECT SHALL FURNISH AND INSTALL REQUIRED 120 VAC ELECTRICAL RECEPTACLES AND PATHWAYS INCLUDING CONDUIT, SLEEVES, BUSHINGS, BACK BOXES, PULL LINES, BLANK FACEPLATES WHERE REQUIRED, CABLE TRAY, AND PLYWOOD BACKBOARDS FOR TERMINATION FIELDS AS INDICATED ON THE DRAWINGS.

NOTE B

THE COMMUNICATIONS SYSTEMS DIVISION 270100 CONTRACTOR SHALL PROVIDE ALL LOW VOLTAGE WIRING, CROSS CONNECTIONS, DEVICE BRACKETS, CONNECTORS, FACEPLATES, AND TERMINATIONS FOR DEDICATED VOICE CABLES.

VOICE OVER IP ACTIVE EQUIPMENT SHALL BE PROVIDED BY THE OWNER UNDER SEPARATE CONTRACT (N.I.C.).

THE COMMUNICATIONS SYSTEMS CONTRACTOR DIVISION 270100 SHALL PROVIDE ALL REQUIRED CABLING TO INTERFACE THE VOICE OVER IP SYSTEM TO THE PA/INTERCOM SYSTEM.

THE ELECTRICAL CONTRACTOR SHALL FURNISH AND INSTALL REQUIRED 120 VAC ELECTRICAL SERVICE AND PATHWAYS INCLUDING CONDUIT, SLEEVES, BUSHINGS, BACK BOXES, PULL LINES, BLANK FACEPLATES WHERE REQUIRED, CABLE TRAY, AND PLYWOOD BACKBOARDS FOR TERMINATION FIELDS AS INDICATED ON THE DRAWINGS.

NOTE C

THE COMMUNICATIONS SYSTEMS CONTRACTOR DIVISION 275000 SHALL FURNISH ALL PUBLIC ADDRESS/INTERCOM SPECIALTY SPEAKER BACK BOXES TO BE INSTALLED BY THE ELECTRICAL CONTRACTOR.

THE COMMUNICATIONS SYSTEMS CONTRACTOR DIVISION 275000 SHALL PROVIDE HEAD-END EQUIPMENT FOR THE PUBLIC ADDRESS/INTERCOM SYSTEM.

THE COMMUNICATIONS SYSTEMS CONTRACTOR DIVISION 275000 SHALL PROVIDE ALL CABLING DEVICE BRACKETS, CONNECTORS, FACEPLATES, TERMINATION MATERIALS, AND EQUIPMENT RACKS/CABINETS FOR THE PUBLIC ADDRESS/INTERCOM SYSTEM.

THE COMMUNICATIONS SYSTEMS CONTRACTOR DIVISION 275000 SHALL PROVIDE ALL REQUIRED CABLING AND PROGRAMMING TO INTERFACE THE PA/INTERCOM SYSTEM TO THE VOICE OVER IP SYSTEM, TO THE MASTER CLOCK SYSTEM, AND TO ALL LOCAL SOUND SYSTEMS.

THE ELECTRIC

Fixture Type	Description	Fixture (Manufacturers and Models)	Light Source	Delivered lm	Fixt. Load (W) (Typical)	Driver	Location / Use	Notes
G M P R S T W Y-	Ground surface or recessed mounting Media or Mesh Pendant (usually a discrete unit) Recessed Surface mounted (typically to ceiling) Track or track mounted Wall mounted Exterior + Mounting (i.e. YG must be exterior ground mount)	Suffixes, like A, B, C, etc. are typically used to denote a variant of a fixture type. Please note that the nomenclature is not absolute. Refer to the individual specifications for each fixture type.	Source Type CCT CRI	Total Delivered lm from Entire Light Fixture (Not Individual Sources)	Total Input Watts for Entire Light Fixture (Not Individual Sources)	Integral or Remote Dimmable or Non-Dim		Mounting heights, special notes, references to other documents, instructions to the Contractor, etc. are typically listed in the Notes column.
P1	Pendant Mounted Continuous Linear x 4 3/16" W x 1-5/16" H Direct/Indirect Plank Style Pendant, 80% uplight 20% downlight	Lithonia Grad Linear #GRD-LINEAR LENGTH-8FT-MSL8-80CRI-35K3D1000LMF-80/20-DIM-CONTROL-VOLT-SCT-SENSORMOUNTING-SUSPENSION-COLOR Lithonia Renna #RNNAD-LLP-LENGTH-MSL8-90CRI-35K-1300LMF-300LMF-SSH-MINI1-ZT-MVOLT-DCT Coronet ECO LED Eaton Corelite Jaylum 75% uplight 25% downlight Finelite Series 16	Integral LED 3500K 80 CRI	1300 lm/ft indirect 300 lm/ft direct	5.6 w/ft	Dimming	Classrooms	Mounting details and run lengths to be coordinated per architectural drawings. Typical -bottom of fixture to be mounted 9' AFF. Voltage and dimming control compatibility per engineer. Finish per architect.
P2	Pendant Mounted Continuous Linear direct/indirect. "Pendant mounted, 3"" wide, LED direct/indirect fixture with diffusing lens. Indirect uplight with widespread optics.	Lumenwerx #VLA3P01-HLO-W30-LED-80-MOD:400-750-35-length-UNV-01-2-mounting-finish	Integral LED 3500K 80 CRI	750 lm/ft indirect mod: 400 lm/ft direct	12 w/ft	Dimming	Workrooms + Offices	Mounting details and run lengths to be coordinated per architectural drawings. Typical -bottom of fixture to be mounted 9' AFF. At wrkroom 202 - bottom of fixture to be mounted at 10' AFF. Voltage and dimming control compatibility per engineer. Finish per architect.
P3A	Pendant Mounted 2.5" W x 1" H, small profile LED uplight in 6'x6' square configuration. Remote driver above ceiling with power-over cable wiring.	Lumenwerx Ory #ORYP1-W0D-LED-80-1000-35-length-UNV-01-1	Integral LED 3500K 80 CRI	1000 lm/ft	8 w/ft	Dimming	Rise Small Group 030	Mounting details to be coordinated per architectural drawings. Bottom of fixture to be mounted 9' AFF. Remote driver box location to be coordinated in accessible location. Voltage and dimming control compatibility per engineer. Finish per architect.
P3B	Pendant Mounted 2.5" W x 1" H, small profile LED uplight in 6'x8' rectangle configuration. Remote driver above ceiling with power-over cable wiring.	Lumenwerx Ory #ORYP1-W0D-LED-80-1000-35-length-UNV-01-1	Integral LED 3500K 80 CRI	1000 lm/ft	8 w/ft	Dimming	Small Group 049 / 254	Mounting details to be coordinated per architectural drawings. Bottom of fixture to be mounted 9' AFF. Remote driver box location to be coordinated in accessible location. Voltage and dimming control compatibility per engineer. Finish per architect.
P3C	Pendant Mounted 2.5" W x 1" H, small profile LED uplight in 4'x8' rectangle configuration. Remote driver above ceiling with power-over cable wiring.	Lumenwerx Ory #ORYP1-W0D-LED-80-1000-35-length-UNV-01-1	Integral LED 3500K 80 CRI	1000 lm/ft	8 w/ft	Dimming	Small Group 143 / 243	Mounting details to be coordinated per architectural drawings. Bottom of fixture to be mounted 9' AFF. Remote driver box location to be coordinated in accessible location. Voltage and dimming control compatibility per engineer. Finish per architect.
P3D	Pendant Mounted 2.5" W x 1" H, small profile LED uplight in 6'x10' rectangle configuration. Remote driver above ceiling with power-over cable wiring.	Lumenwerx Ory #ORYP1-W0I-LED-80-1000-35-length-UNV-01-1	Integral LED 3500K 80 CRI	1000 lm/ft	8 w/ft	Dimming	Teacher Workroom/Dining 024	Mounting details to be coordinated per architectural drawings. Bottom of fixture to be mounted 9' AFF. Remote driver box location to be coordinated in accessible location. Voltage and dimming control compatibility per engineer. Finish per architect.
P4	High Bay Pendant	Fixture per Engineer	Integral LED 3500K 80 CRI	(per TEC)	(per TEC)	Dimming	Gym	
P5	Pencant mounted 36" Square LED downlight with box-shaped acoustic housing and flush bottom diffusing lens.	Light Art Acoustic Box #36-36-FELT COLOR-SUSPENSION-830-CANOPY-POWER CORD	Integral LED 3100K 81 CRI		92 w	Dimming	Lobby	Mounting details and hang height to be coordinated per architectural drawings/ elevations. Voltage and dimming control compatibility per engineer. Finish per architect.
P5A	Pendant mounted 2' L x 2' H Square LED indirect/direct pendant with box-shaped acoustic housing and flush top and bottom diffusing lens.	Coronet Shush #SHUSH-2X2-35-LTG3-LTG2-UNV-DB-FINISH-AC	Integral LED 3000K 81 CRI	4000 lm	54 w	Dimming	Lobby	Mounting details and hang height to be coordinated per architectural drawings/ elevations. Voltage and dimming control compatibility per engineer. Finish per architect.
P6	Not Used							
P7	Not Used							
P8A	Pendant Mounted 4' Radius direct/indirect LED arc-shaped fixture with special paint finish.	ALW Cresent Mooning #WEL1-S-QR0-SS-MIN-80-3500K-DRIVER-LENS-MIN-80-3500K-DRIVER-LENS Alt.: Lightnet Liquid Line	Integral LED 3500K 80 CRI	1500 lm direct 1700 lm indirect	69 w	Dimming	Project Areas	Lam recommended fixture option for project area composition. Fixture to be mounted at 9' AFF. Architect to verify
P8B	Pencant Mounted 6' Radius direct/indirect LED arc-shaped fixture with special paint finish.	ALW Cresent Mooning #WEL1-S-QT2-SS-MIN-80-3500K-DRIVER-LENS-MIN-80-3500K-DRIVER-LENS Alt.: Lightnet Liquid Line	Integral LED 3500K 80 CRI	2250 lm direct 2525 lm indirect	105 w	Dimming	Project Areas	Lam recommended fixture option for project area composition. Fixture to be mounted at 9' AFF. Architect to verify
P9A	Not Used							
P9B	Pencant mounted 4' ring direct/indirect pendant with illuminated inner face	Lumenwerx Rim Round Pendant #RIMRP-48-LLO-LED-90-OUTPUT-35-UNV-01-1-FINISH	Integral LED 3500K 80 CRI	6000 lm	72.5 w	Dimming	Library	Mounting details and hang height to be coordinated per architectural drawings/ elevations. Voltage and dimming control compatibility per engineer. Finish per architect.
P9C	Pencant mounted 6' ring direct/indirect pendant with illuminated inner face	Lumenwerx Rim Round Pendant #RIMRP-72*-ULO-LED-90-OUTPUT-35-UNV-01-1-FINISH *Mod for 6' diameter	Integral LED 3500K 80 CRI	8850 lm	108 w	Dimming	Library	Mounting details and hang height to be coordinated per architectural drawings/ elevations. Voltage and dimming control compatibility per engineer. Finish per architect.
P9D	Pencant mounted 8' ring direct/indirect pendant with illuminated inner face	Lumenwerx Rim Round Pendant #RIMRP-96*-ULO-LED-90-OUTPUT-35-UNV-01-1-FINISH *Mod for 8' diameter	Integral LED 3500K 80 CRI	10000 lm	144 w	Dimming	Project Areas	Mounting details and hang height to be coordinated per architectural drawings/ elevations. Voltage and dimming control compatibility per engineer. Finish per architect. Set bottom of fixture at 8'6" AFF. Architect to verify
P10	Pencant mounted 30" D x 24" H drum with acoustic material shade	Light Art Acoustic Drum ACOUSTIC DRUM-30-23-FELT-SUSPENSION-835-CANOPY-CORD-VOLTAGE	Integral LED 3500K 80 CRI	~4500 lm	68 w	Dimming	Project Areas	Mounting details and hang height to be coordinated per architectural drawings/ elevations. Voltage and dimming control compatibility per engineer. Finish per architect. Set bottom of fixture at 8'2" AFF. Architect to verify
P11	Not Used							
P12-4'	Pencant 4' L x 2" W x 4-3/8" H linear LED direct/indirect with regressed lens - extruded aluminum housing with regressed frosted acrylic lens in ACT. Special modification; paint inside of exposed housing below lens dark gray.	Mark Lighting Slot 2 SL2L-LOP-6FT-RLP-TG-80CRI-35K-*500LMF-MIN1-277-ZT Neoray Define 2 Regressed Direct Recessed Coronet LSR2 LED RG	Integral LED 3500K 80 CRI	500 lm/ft	5 w/ft	Dimming	Cafeteria	Coordinate locations with ductwork and structure
P12-6'	Pencant 6' L x 2" W x 4-3/8" H linear LED direct/indirect with regressed lens - extruded aluminum housing with regressed frosted acrylic lens in ACT. Special modification; paint inside of exposed housing below lens dark gray.	Mark Lighting Slot 2 SL2L-LOP-6FT-RLP-TG-80CRI-35K-500LMF-MIN1-277-ZT Neoray Define 2 Regressed Direct Recessed Coronet LSR2 LED RG	Integral LED 3500K 80 CRI	500 lm/ft	5 w/ft	Dimming	Cafeteria	Coordinate locations with ductwork and structure
P12-8'	Pencant 8' L x 2" W x 4-3/8" H linear LED direct/indirect with regressed lens - extruded aluminum housing with regressed frosted acrylic lens in ACT. Special modification; paint inside of exposed housing below lens dark gray.	Mark Lighting Slot 2 SL2L-LOP-8FT-RLP-TG-80CRI-35K-500LMF-MIN1-277-ZT Neoray Define 2 Regressed Direct Recessed Coronet LSR2 LED RG	Integral LED 3500K 80 CRI	500 lm/ft	5 w/ft	Dimming	Cafeteria	Coordinate locations with ductwork and structure
P13	Not Used							
P14	Pencant 12' L x 6" W x 1-1/2" H linear LED direct/indirect - extruded aluminum housing with acrylic frosted lens - 60% indirect/40% direct distribution.	Focal Point Nera Linear FNRS-FL60-500LF-35K-1C-UNV-LD1-G-CLV48-PS-12'-OS	Integral LED 3500K 80 CRI	500 lm/ft	4.5 w/ft	Dimming	Library	Pendant to be suspended 10' AFF
P15	Pencant 2' L x 1-1/2" H square LED direct/indirect - extruded aluminum housing with acrylic frosted lens - 60% indirect/40% direct distribution	Focal Point Nera FNRP-22-FL50-2000L-35K-1C-UNV-L11-G-CLV48-PS	Integral LED 3500K 80 CRI	2000 lm	17.7 w	Dimming	Teacher Workroom/Dining 230	Coordinate locations with chilled beams and table. Pendant to be suspended 8' AFF
P16	Ceiling cable suspended, continuous linear, 1.5" profile, LED wallwash fixture, with baffle.	Vode Wingrail Ceiling Cable #107-WG-01-system length-rail length-CC-48-2R-AE-volt-2-SO-35-WB-finish	Integral LED 3500K 80 CRI	550 lm/ft	6.7 w	Dimming	Main Lobby	Mounting details and hang height to be coordinated per architectural drawings/ elevations. Voltage and dimming control compatibility per engineer. Finish per architect.
R1	Recessed 1' x 4' Recessed LED lensed Troffer Downlight	Lithonia TLED-1x4 TL4-20L-RW-A12-DRIVER-LP835	Integral LED 3500K 80 CRI	2000 lm	21 w	Dimming	BOH Spaces / Toilet Rooms	Recessed mounting details to be coordinated per architectural ceiling specification. Engineer to review dimming compatibility with control system and voltage. Finish per architect.
R2-4'	Recessed 4' L x 2" W x 4-3/8" H linear LED downlight with regressed lens - extruded aluminum housing with regressed frosted acrylic lens in ACT. Special modification; paint inside of exposed housing below lens dark gray.	Mark Lighting Slot 2 SL2L-LOP-4FT-RLP-TG-80CRI-35K-400LMF-MIN1-277-ZT-MOD FINISH* *modified for gray paint on inside regress Neoray Define 2 Regressed Direct Recessed Coronet LSR2 LED RG	Integral LED 3500K 80 CRI	400 lm/ft	4 w/ft	Dimming	Corridors	Recessed mounting details to be coordinated per architectural ceiling specification. Engineer to review dimming compatibility with control system and voltage. Finish per architect.
R2-6'	Recessed 6' L x 2" W x 4-3/8" H linear LED downlight with regressed lens - extruded aluminum housing with regressed frosted acrylic lens in ACT. Special modification; paint inside of exposed housing below lens dark gray.	Mark Lighting Slot 2 SL2L-LOP-6FT-RLP-TG-80CRI-35K-400LMF-MIN1-277-ZT-MOD FINISH* *modified for gray paint on inside regress Neoray Define 2 Regressed Direct Recessed Coronet LSR2 LED RG	Integral LED 3500K 80 CRI	400 lm/ft	4 w/ft	Dimming	Corridors	Recessed mounting details to be coordinated per architectural ceiling specification. Engineer to review dimming compatibility with control system and voltage. Finish per architect.
R2-8'	Recessed 8' L x 2" W x 4-3/8" H linear LED downlight with regressed lens - extruded aluminum housing with regressed frosted acrylic lens in ACT. Special modification; paint inside of exposed housing below lens dark gray.	Mark Lighting Slot 2 SL2L-LOP-8FT-RLP-TG-80CRI-35K-400LMF-MIN1-277-ZT-MOD FINISH* *modified for gray paint on inside regress Neoray Define 2 Regressed Direct Recessed Coronet LSR2 LED RG	Integral LED 3500K 80 CRI	400 lm/ft	4 w/ft	Dimming	Corridors	Recessed mounting details to be coordinated per architectural ceiling specification. Engineer to review dimming compatibility with control system and voltage. Finish per architect.
R2-10'	Recessed 2"W linear downlight with regressed lens (2'L x 2"W x 5.5"D in extruded aluminum housing with regressed frosted acrylic lens in ACT	Mark Lighting Slot 2 SL2L-LOP-10FT-RLP-TG-80CRI-35K-400LMF-MIN1-277-ZT Neoray Define 2 Regressed Direct Recessed Coronet LSR2 LED RG	Integral LED 3500K 80 CRI	400 lm/ft	4 w/ft	Dimming	Corridors	Recessed mounting details to be coordinated per architectural ceiling specification. Engineer to review dimming compatibility with control system and voltage. Finish per architect.
R3	Recessed 4"W continuous linear downlight with regressed lens x 4"W x 5.5"D in extruded aluminum housing with regressed frosted acrylic lens in ACT	Mark Lighting Slot 4 SL4L-LOP-LENGTH-RLP-TG-80CRI-35K-500LMF-MIN1-277-ZT Neoray Define 4 Regressed Direct Recessed Coronet LSR4 LED RG	Integral LED 3500K 80 CRI	500 lm/ft	5 w/ft	Dimming	Toilet Room - vanity, PT, Cafeteria	Recessed mounting details to be coordinated per architectural ceiling specification. Engineer to review dimming compatibility with control system and voltage. Finish per architect.
R4	Recessed 4" Diameter LED Downlight, Wide Distribution	Gotham 4" Evo Downlight #EVO-35-15-4AR-WD-FINISH-MVOLT	Integral LED 3500K 80 CRI	1500 lms	17.3 w	Dimming	Throughout	Recessed mounting details to be coordinated per architectural ceiling specification. Engineer to review dimming compatibility with control system and voltage. Finish per architect.
R5	Recessed 4" Diameter LED Round Lensed Wallwasher - Medium output	Gotham 4" Evo Wallwasher #EVO-LW-35-15-4AR-WD-FINISH-MVOLT	Integral LED 3500K 80 CRI	1069 lms	18.2 w	Dimming	Throughout	Recessed mounting details to be coordinated per architectural ceiling specification. Engineer to review dimming compatibility with control system and voltage. Finish per architect.
R5A	Recessed 4" Diameter LED Round Lensed Wallwasher - High output	Gotham 4" Evo Wallwasher #EVO-LW-35-25-4AR-WD-FINISH-MVOLT	Integral LED 3500K 80 CRI	1753 lms	29.8 w	Dimming	Stair	Recessed mounting details to be coordinated per architectural ceiling specification. Engineer to review dimming compatibility with control system and voltage. Finish per architect.
R6	Recessed 1' Square LED "coffer-style" downlight with recessed center and indirect source	Fluxwerx Inbox #NB1-11-A-35-DRIVER-M	Integral LED 3500K 80 CRI	1740 lm	17 w	Dimming	Main Lobby, Upper Lobby, Corridors	Recessed mounting details to be coordinated per architectural ceiling specification. Engineer to review dimming compatibility with control system and voltage. Finish per architect.
R7	Recessed 2' Square lensed, gasketed troffer	Lithonia #2TL2-40L-RW-A12-EZ1-LP835-ABC Columbia LIT Wet location Eaton GRLED	Integral LED 3500K 80 CRI	3,893 lm	35 w	Dimming	Kitchen	Recessed mounting details to be coordinated per architectural ceiling specification. Engineer to review dimming compatibility with control system and voltage. Finish per architect.
R8A	Recessed 2' Semi-recessed downlight with 1" frame projection	Lumenwerx Shell 24 #SHERAD-24-HLO-SW-90-L-35-UNV-D1-DRIVER-1-FINISH	Integral LED 3500K 90 CRI	2000 lm	26 w	Dimming	Classroom Corridor Entry	Recessed mounting details to be coordinated per architectural ceiling specification. Engineer to review dimming compatibility with control system and voltage. Finish on frame projection per architect.
R8B	Recessed 12" Semi-recessed downlight with 1" frame projection	Lumenwerx Shell 12 #SHERAD-12-HLO-SW-90-1500lm-35-UNV-D1-RDB-1-FINISH	Integral LED 3500K 90 CRI	1500 lm	22.5 w	Dimming	Media Center	Recessed mounting details to be coordinated per architectural ceiling specification. Engineer to review dimming compatibility with control system and voltage. Finish on frame projection per architect.
R8C	Recessed 8" Semi-recessed downlight with 1" frame projection	Lumenwerx Shell 8 #SHERAD-8-HLO-SW-90-L-35-UNV-D1-DRIVER-1-FINISH	Integral LED 3500K 90 CRI	750 lm	11.5 w	Dimming	Servery Soffit	Recessed mounting details to be coordinated per architectural ceiling specification. Engineer to review dimming compatibility with control system and voltage. Finish on frame projection per architect.
R9	Pencant mounted, 1/78" (max) wide x 6' long, linear LED, 55 deg. beam spread with individual micro-downlight optics, very low brightness black baffle shielding.	Lumenwerx Squero MRO #SQUPD-MRO55-8-LED-80-750-35-UNV-6'-D1-1-mounting-B	Integral LED 3500K 80 CRI	500 lm/ft	5.5 w/ft	Dimming	Auditorium Stage - general lighting	Recessed mounting details to be coordinated per architectural ceiling specification. Engineer to review dimming compatibility with control system and voltage. Finish per architect.
R10	Not Used							
R11	Continuous linear, indirect LED wallslot, 9" wide x 9' tall.	Litecontrol Wallslot 2000 #2DL-length-C1-35K-DOS0-D01-1C-UNV-SE	Integral LED 3500K 80 CRI	500 lm/ft	6.6 w/ft	Dimming	Quiet Rooms	Continuous lengths to be coordinated per architectural drawings and field conditions. Run wallslot continuous end to end, center illuminated light lengths, hold 6" from end walls. Voltage per engineer.
R12	Recessed, 2 inch diameter, LED round downlight with 45 deg. beam distribution, and 45 deg. cutoff to source and source image.	Gotham Incito 2" Downlight #ICD-35-10-2AR-LD-45D-MVOLT-UGZ	Integral LED 3500K 80 CRI	1000 lm	13 w	Dimming	General / Front Office	Recessed mounting details to be coordinated per architectural ceiling specification. Engineer to review dimming compatibility with control system and voltage. Finish per architect.
S1	Surface/pendant 4'-0" linear strip	Lithonia #ZLIN-L48-3000LM-FST-MVOLT-35K-80CRI-WH-HC36	Integral LED 3500K 80 CRI		24 w	Dimming	B.O.H.	Location and mounting per engineer
S2	Undercabinet Light, shallow profile	Lithonia #UCEL-LENGTH-30K-90CRI-SWR-WH	Integral LED 3500K 80 CRI	388 lms/ft	5.8 w		Classrooms, Teacher Desks	
S3	Surface mounted 4' D x 3.7" H round LED fixture with diffusing lens, shallow edge housing and subtle uplight above detail.	Focal Point Skydome Edge #FSDEP-4-FL-7000DN-SG-35K-1C-UNV-L11-SH-FINISH	Integral LED 3500K 80 CRI	7000 lm	62 w	Dimming	General office, PT, Project Area	Accent color for housing per architect.
S4	Not Used							
S5	Surface mounted 1' D x 4-3/4" H LED round downlight with accent color drum housing and flush diffuse lens.	Lumenwerx Pop Color Round 12 LED #PCRO5-12-ULO-FH-LED-80-OUTPUT-35-UNV-01-1-SUR-FINISH	Integral LED 3500K 80 CRI	750 lm	7.5 w	Dimming	Servery Ceiling	Finish per architect
S6	Surface mounted Continuous Lengths x .70" W x 1.05" H tape light in flexible channel with diffusing lens. Provide remote driver and all necessary cables and connectors for complete assembly.	Acolyte Neonlyte #1-HE-67-24-35-FEED-MOUNTING	Integral LED 3500K 80 CRI	160 lms/ft	3 w/ft	Dimming	Coves	Mounting details and continuous run lengths to be coordinated per architectural drawings. Remote driver locations to be coordinated in accessible location.
S7	Surface mounted Continuous Lengths x .70" W x 1.05" H tape light in rigid channel with diffusing lens. Provide remote driver and all necessary cables and connectors for complete assembly.	Acolyte Neonlyte #1-HE-67-24-35-FEED-MOUNTING	Integral LED 3500K 80 CRI	160 lms/ft	3 w/ft	Dimming	Proscenium	Mounting details and continuous run lengths to be coordinated per architectural drawings. Remote driver locations to be coordinated in accessible location.
S8	Surface mounted Continuous Lengths x .70" W x 1.05" H tape light in rigid channel with diffusing lens. Provide remote driver and all necessary cables and connectors for complete assembly.	Acolyte Neonlyte #1-HE-67-24-35-FEED-MOUNTING	Integral LED 3500K 80 CRI	160 lms/ft	3 w/ft	Dimming	Display Case	Mounting details and continuous run lengths to be coordinated per architectural drawings. Remote driver locations to be coordinated in accessible location.
T1A	Auditorium track object light fixture with hood, hex cell louver, and beam softening lens, minimum 1500 delivered lm, interchangeable optics, white finish	LSI LX2044 #LX2044-T19-20-9B-35-N4-00-L3-277-W Amerlux Speq-M Zumtobel Onico	Integral LED 3000K 90 CRI	2000 lm	23 w	0-10V to 1% Integral Dimmable driver	Stage	
T1B	Auditorium track object light fixture with hood, hex cell louver, and beam softening lens, minimum 1500 delivered lm, interchangeable optics, black finish	LSI LX2044 #LX2044-T19-20-9B-35-N4-00-L3-277-B Amerlux Speq-M Zumtobel Onico	Integral LED 3000K 90 CRI	2000 lm	23 w	0-10V to 1% Integral Dimmable driver	Stage	
T2	not used							
T3	Auditorium track object light fixture with hood, hex cell louver, and beam softening lens, minimum 1500 delivered lm, interchangeable optics, white finish	LSI LX2044 #LX2044-T19-20-9B-35-N4-00-L3-277-W Amerlux Speq-M Zumtobel Onico	Integral LED 3000K 90 CRI	2000 lm	23 w	0-10V to 1% Integral Dimmable driver	Lobby map wall	
TA	Recessed mount 2-circuit track, 120v, White Finish	LSI two-circuit track #32X10 (4FT) FINISH PER ARCHITECT #32X20 (8FT) FINISH PER ARCHITECT Zumtobel Global Trac Amerlux TEK					Stage	Complete operable system including power feed, joiners, and end caps as required. Contractor to field cut lengths as shown on plans.
TB	Recessed mount 2-circuit track, 120v, White Finish	LSI two-circuit track #32X10 (4FT) FINISH PER ARCHITECT #32X20 (8FT) FINISH PER ARCHITECT Zumtobel Global Trac Amerlux TEK					Auditorium - Between wood panels adjacent to stage	Complete operable system including power feed, joiners, and end caps as required. Contractor to field cut lengths as shown on plans.
TC	Recessed mount 2-circuit track, 120v, White Finish	LSI two-circuit track #32X10 (4FT) FINISH PER ARCHITECT #32X20 (8FT) FINISH PER ARCHITECT Zumtobel Global Trac Amerlux TEK					Lobby map wall	Complete operable system including power feed, joiners, and end caps as required. Contractor to field cut lengths as shown on plans.
W1	Wall mounted 2' L x 3.6" D Tubular fixture with diffusing lens and round aluminium caps	Eureka Bolt #3544-24-35-VOLTAGE-DV-FRO-CHR	Integral LED 3500K 80 CRI	1990 lm	17 w	Dimming	Stairs	Fixture mounting to be aligned at beginning, middle and end of stairs. Set bottom of fixture at 8'6" minimum above stair step and floor. Finish per architect
W2	Wall mounted 3' L x 4" W x 2.5" H LED Sconce with painted vertical shield and diffusing side panels	OCL Illusion #1L1-515A-36-GW-FINISH-LED1-35-UNV	Integral LED 3500K 80 CRI	2800 lm	50 w	Dimming	Project Area Entries	Finish per architect
W3-4'	Wall mounted 4' L x 4-1/2" W x 2" H LED Linear, indirect/direct with valence	Lumenwerx Walo #WLW3D-HLO-LED-80-500-35-4-UNV-01-1-DMB-FINISH	Integral LED 3500K 80 CRI	2000 lm	7.75 w	Dimming	Quiet Room	Finish per architect
W3-6'	Wall mounted 6' L x 4-1/2" W x 2" H LED Linear, indirect/direct with valence	Lumenwerx Walo #WLW3D-HLO-LED-80-500-35-6-UNV-01-1-DMB-FINISH	Integral LED 3500K 80 CRI	3000 lm	11.6 w	Dimming	Quiet Room	Finish per architect
W3-8'	Wall mounted 8' L x 4-1/2" W x 2" H LED Linear, indirect/direct with valence	Lumenwerx Walo #WLW3D-HLO-LED-80-500-35-8-UNV-01-1-DMB-FINISH	Integral LED 3500K 80 CRI	4000 lm	15.5 w	Dimming	Teacher Workroom/Dining 024	Finish per architect
W3-14'	Wall mounted 14' L x 4-1/2" W x 2" H LED Linear, indirect/direct with valence	Lumenwerx Walo #WLW3D-HLO-LED-80-500-35-14-UNV-01-1-DMB-FINISH	Integral LED 3500K 80 CRI	70000 lm	15.5 w	Dimming	Project Area	Finish per architect
W3-16'	Wall mounted 16' L x 4-1/2" W x 2" H LED Linear, indirect/direct with valence	Lumenwerx Walo #WLW3D-HLO-LED-80-500-35-16-UNV-01-1-DMB-FINISH	Integral LED 3500K 80 CRI	8000 lm	31 w	Dimming	Project Area	Finish per architect
W4	Not Used							
W5	Not Used							
W6	Wall mounted, small profile, LED egress light.	Lithonia WDGE #WDG1 LED-P1-30K-80-VW-MVOLT-finish	Integral LED 3000K 80 CRI	1200 lm	4 w		Exterior Egress Doors	Fixture mounting details, and height to be coordinated. Finish per architect.
W7	Wall Mounted Continuous Linear 3" wide, LED direct/indirect fixture with diffusing lens.	Lumenwerx VIA3 #VIA3WD-HLO-FH-CLO-LED-80-mod:400-mod:400-30-length-UNV-01-1-DMB-finish	Integral LED 3000K 80 CRI	mod: 400 lm/ft indirect mod: 400 lm/ft direct	6 w/ft	Dimming	Nurses office - bed lights	Mounting details and height to be coordinated per architectural drawings. Fixture to have two circuits - switch direct and indirect components separately. Voltage and dimming control compatibility per engineer. Finish per architect.
G1	Exterior Area Parking/Roadway-Scale, 20' Pole, Type III Distribution with house side shields mounted on 20'-0" 4" DIA round straight steel pole.	Lithonia D Series #DSX1 LED-P2-30K-T3M-MVOLT-RPA-HS POLE: RSS 18 6Ef DM19AS Eaton Galleon Beacon Viper	Integral LED 3000K 80 CRI	8,000 lm	70 w	Integral non-dimmable driver	Exterior Parking	LEED COMPLIANT B.U.G. RATING: B3-U0-G2
G2	Twin head Exterior Area Parking/Roadway-Scale, 20' Pole, Type III Distribution, mounted on 20'-0" 4" DIA round straight steel pole.	Lithonia D Series #DSX1 LED-P2-30K-T3M-MVOLT-RPA Twin head POLE: RSS 18 6Ef DM19AS Eaton Galleon Beacon Viper	Integral LED 3000K 80 CRI	(2) 8,000 lm	140 w	Integral non-dimmable driver	Exterior Parking	LEED COMPLIANT B.U.G. RATING: B2-U0-G2
G3	Exterior Area Parking/Roadway-Scale, 20' Pole, Type III Distribution mounted on 20'-0" 4" DIA round straight steel pole.	Lithonia D Series #DSX1 LED-P2-30K-T3M-MVOLT-RPA POLE: RSS 18 6Ef DM19AS Eaton Galleon Beacon Viper	Integral LED 3000K 80 CRI	8,000 lm	70 w	Integral non-dimmable driver	Exterior Parking, Roadway	LEED COMPLIANT B.U.G. RATING: B2-U0-G2
G4	Exterior Area Pedestrian-Scale, 14' Post Top, Type V Distribution	Lithonia Radean #RADPT LED-P1-30K-SYM-MVOLT-PT4-RSS14-FINISH AAL Largent Ligman Anesti	Integral LED 3000K 80 CRI	3,189 lm	25 w	Integral non-dimmable driver	Exterior Parking, Roadway	LEED COMPLIANT B.U.G. RATING: B2-U1-G1
G6	Exterior ingrade LED sign uplight.	TBD	Integral LED 3000K 80 CRI					
EDX	LED EDGE LIT EXIT SIGN.	EELF EDGE-1/2/3-R-C-W-SCW	INTEGRAL LED DRIVER		N/A	NONE	THROUGHOUT	
HDV	HIGH ABUSE DURABLE CAST ALUMINUM LED EXIT SIGN.	LITHONIA LV-S-AW/-1-R-120/277-LM	INTEGRAL LED DRIVER		N/A	NONE	GYMNASIUM EGRESS	
EDA	LED EDGE LIT EXIT SIGN WITH ORIGINAL INTERNATIONAL SYMBOL OF ACCESSIBILITY.	EELF SWXECT-EDGP-1/2)-R-C-W-SCW-(ORIGINAL SYMBOL/NOT CT APPROVED SYMBOL)	INTEGRAL LED DRIVER		N/A	NONE	ACCESSIBLE EXITS	
	DUAL-HEAD LED EMERGENCY LIGHTING BATTERY UNIT.	LITHONIA ELM2-LED-SD	INTEGRAL LED DRIVER		N/A	NONE	ELECTRIC ROOMS	

LIGHTING FIXTURE GENERAL NOTES FOR ALL LIGHTING FIXTURES

1 – FURNISH FIXTURES WITH ALL REQUIRED MOUNTING HARDWARE. WHERE RECESSED LIGHTING FIXTURES ARE TO BE INSTALLED IN PLASTER, ACOUSTIC TILE, OR GYPSUM BOARD, ALL PLASTER FRAMES, FINISH TRIM, FITTINGS AND SUPPORTS SHALL BE FURNISHED AND INSTALLED TO MEET THE ARCHITECTURAL AND STRUCTURAL CONDITIONS AT EACH LOCATION.

2 – REFER TO ARCHITECTURAL DETAIL DRAWINGS AND REFLECTED CEILING PLAN FOR EXACT LOCATION OF ALL LIGHTING FIXTURES.

3 – THE EXACT MOUNTING HEIGHT OF ALL CEILING OR WALL MOUNTED LIGHTING FIXTURES SHALL BE DETERMINED BY THE ARCHITECT, INCLUDING THE LENGTHS OF STEMS FOR PENDANT MOUNTED FIXTURES.

4 – ALL LIGHTING FIXTURES AND LED DRIVERS SHALL BE 120/277 DUAL VOLTAGE RATED.

5 – ALL FIXTURES SHALL BE RATED AT 3500K AND HAVE A MINIMUM CRI RATING OF 82, UNLESS OTHERWISE NOTED.

6 – COORDINATE LED DRIVERS WITH ASSOCIATED LIGHTING CONTROLS.

7 – FIXTURE INPUT POWER IS THE ACTUAL FIXTURE INPUT WATTAGE, NOT THE LIGHT SOURCE WATTAGE. ANY "ALTERNATES", "EQUALS" OR "EQUIVALENTS" MAY HAVE DIFFERENT LOADS. ELECTRICAL CONTRACTOR SHALL VERIFY THAT THE PROPOSED FIXTURE INPUT POWER MATCHES SPECIFIED. PROJECT PURSUING LEED CERTIFICATION AND LIGHTING POWER DENSITY IS A FACTOR IN OVERALL BUILDING EFFICIENCY.

8 – THE PRIMARY MANUFACTURER AND MODEL NUMBER LISTED FOR EACH FIXTURE TYPE SHALL SERVE AS THE BASIS OF DESIGN. ANY "ALTERNATES", "EQUALS" OR "EQUIVALENTS" SUBSEQUENTLY LISTED UNDER EACH PRIMARY LISTING MAY BE ABLE TO PROVIDE A SUITABLE PRODUCT THAT CLOSELY MATCHES THE PRIMARY LISTING. UNLESS PROVIDED WITH A SPECIFIC CATALOG NUMBER, THOSE "ALTERNATES", "EQUALS" OR "EQUIVALENTS" MAY BE REQUIRED TO MODIFY THEIR STANDARD PRODUCTS TO MATCH THE PRIMARY LISTING AS BEST POSSIBLE. SUITABILITY OF "ALTERNATES", "EQUALS" OR "EQUIVALENTS" SHALL BE DETERMINED SOLELY BY THE LIGHTING DESIGNER FOR ANY FIXTURE TYPES LISTED

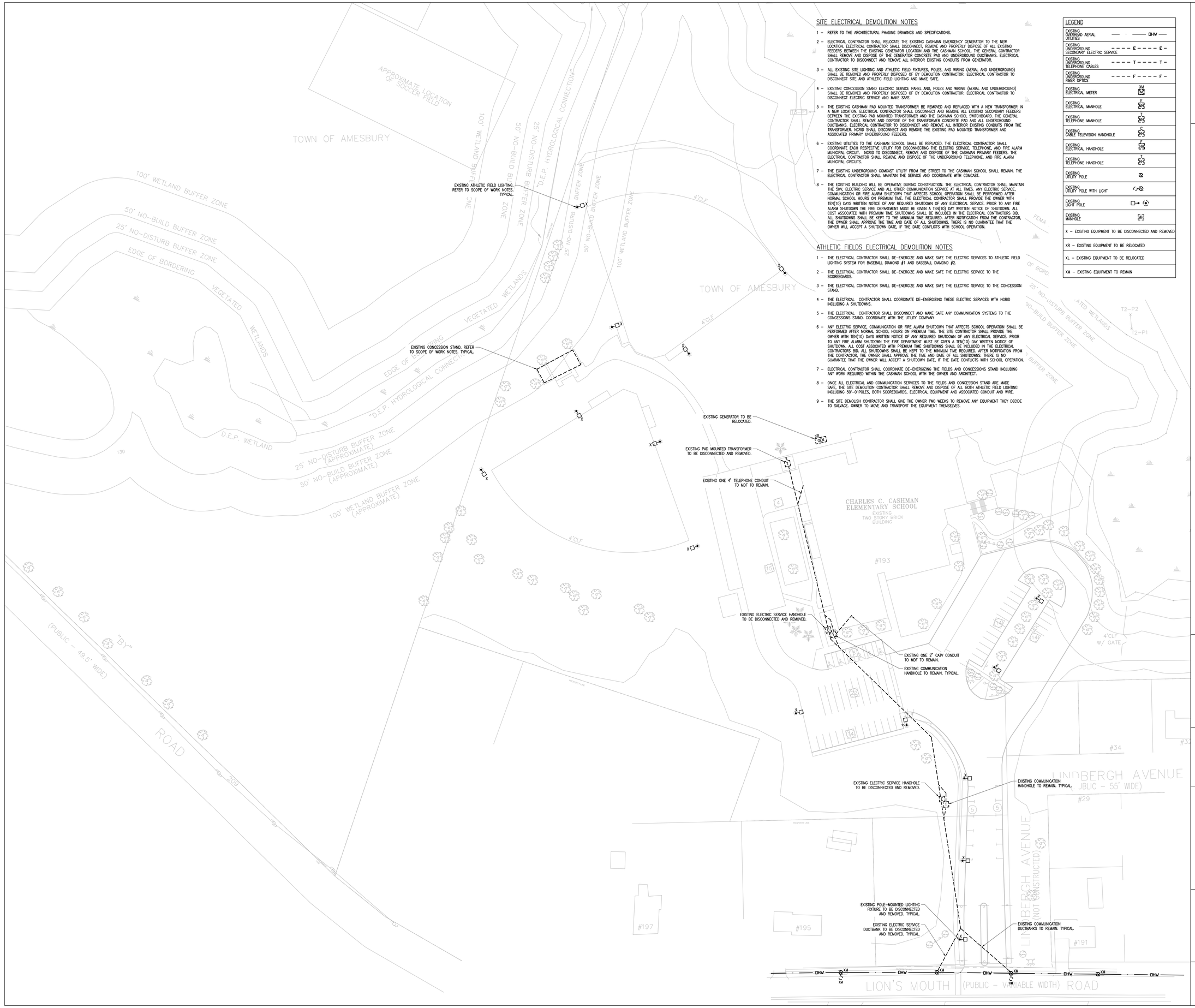

SITE ELECTRICAL DEMOLITION NOTES

1 – REFER TO THE ARCHITECTURAL PHASING DRAWINGS AND SPECIFICATIONS.

2 – ELECTRICAL CONTRACTOR SHALL RELOCATE THE EXISTING CASHMAN EMERGENCY GENERATOR TO THE NEW LOCATION. ELECTRICAL CONTRACTOR SHALL DISCONNECT, REMOVE AND PROPERLY DISPOSE OF ALL EXISTING FEEDERS BETWEEN THE EXISTING GENERATOR LOCATION AND THE CASHMAN SCHOOL. THE GENERAL CONTRACTOR SHALL REMOVE AND DISPOSE OF THE GENERATOR CONCRETE PAD AND UNDERGROUND DUCTBANKS. ELECTRICAL CONTRACTOR TO DISCONNECT AND REMOVE ALL INTERIOR EXISTING CONDUITS FROM GENERATOR.

3 – ALL EXISTING SITE LIGHTING AND ATHLETIC FIELD FIXTURES, POLES, AND WIRING (AERIAL AND UNDERGROUND) SHALL BE REMOVED AND PROPERLY DISPOSED OF BY DEMOLITION CONTRACTOR. ELECTRICAL CONTRACTOR TO DISCONNECT SITE AND ATHLETIC FIELD LIGHTING AND MAKE SAFE.

4 – EXISTING CONCESSION STAND ELECTRIC SERVICE PANEL AND, POLES AND WIRING (AERIAL AND UNDERGROUND) SHALL BE REMOVED AND PROPERLY DISPOSED OF BY DEMOLITION CONTRACTOR. ELECTRICAL CONTRACTOR TO DISCONNECT ELECTRIC SERVICE AND MAKE SAFE.

5 – THE EXISTING CASHMAN PAD MOUNTED TRANSFORMER BE REMOVED AND REPLACED WITH A NEW TRANSFORMER IN A NEW LOCATION. ELECTRICAL CONTRACTOR SHALL DISCONNECT AND REMOVE ALL EXISTING SECONDARY FEEDERS BETWEEN THE EXISTING PAD MOUNTED TRANSFORMER AND THE CASHMAN SCHOOL SWITCHBOARD. THE GENERAL CONTRACTOR SHALL REMOVE AND DISPOSE OF THE TRANSFORMER CONCRETE PAD AND ALL UNDERGROUND DUCTBANKS. ELECTRICAL CONTRACTOR TO DISCONNECT AND REMOVE ALL INTERIOR EXISTING CONDUITS FROM THE TRANSFORMER. NGRID SHALL DISCONNECT AND REMOVE THE EXISTING PAD MOUNTED TRANSFORMER AND ASSOCIATED PRIMARY UNDERGROUND FEEDERS.

6 – EXISTING UTILITIES TO THE CASHMAN SCHOOL SHALL BE REPLACED. THE ELECTRICAL CONTRACTOR SHALL COORDINATE EACH RESPECTIVE UTILITY FOR DISCONNECTING THE ELECTRIC SERVICE, TELEPHONE, AND FIRE ALARM MUNICIPAL CIRCUIT. NGRID TO DISCONNECT, REMOVE AND DISPOSE OF THE CASHMAN PRIMARY FEEDERS. THE ELECTRICAL CONTRACTOR SHALL REMOVE AND DISPOSE OF THE UNDERGROUND TELEPHONE, AND FIRE ALARM MUNICIPAL CIRCUITS.

7 – THE EXISTING UNDERGROUND COMCAST UTILITY FROM THE STREET TO THE CASHMAN SCHOOL SHALL REMAIN. THE ELECTRICAL CONTRACTOR SHALL MAINTAIN THE SERVICE AND COORDINATE WITH COMCAST.

8 – THE EXISTING BUILDING WILL BE OPERATIVE DURING CONSTRUCTION. THE ELECTRICAL CONTRACTOR SHALL MAINTAIN THE 34KV, ELECTRIC SERVICE AND ALL OTHER COMMUNICATION SERVICE AT ALL TIMES. ANY ELECTRIC SERVICE, COMMUNICATION OR FIRE ALARM SHUTDOWN THAT AFFECTS SCHOOL OPERATION SHALL BE PERFORMED AFTER NORMAL SCHOOL HOURS ON PREMIUM TIME. THE ELECTRICAL CONTRACTOR SHALL PROVIDE THE OWNER WITH TEN(10) DAYS WRITTEN NOTICE OF ANY REQUIRED SHUTDOWN OF ANY ELECTRICAL SERVICE. PRIOR TO ANY FIRE ALARM SHUTDOWN THE FIRE DEPARTMENT MUST BE GIVEN A TEN(10) DAY WRITTEN NOTICE OF SHUTDOWN. ALL COST ASSOCIATED WITH PREMIUM TIME SHUTDOWNS SHALL BE INCLUDED IN THE ELECTRICAL CONTRACTORS BID. ALL SHUTDOWNS SHALL BE KEPT TO THE MINIMUM TIME REQUIRED. AFTER NOTIFICATION FROM THE CONTRACTOR, THE OWNER SHALL APPROVE THE TIME AND DATE OF ALL SHUTDOWNS. THERE IS NO GUARANTEE THAT THE OWNER WILL ACCEPT A SHUTDOWN DATE, IF THE DATE CONFLICTS WITH SCHOOL OPERATION.

ATHLETIC FIELDS ELECTRICAL DEMOLITION NOTES

1 – THE ELECTRICAL CONTRACTOR SHALL DE-ENERGIZE AND MAKE SAFE THE ELECTRIC SERVICES TO ATHLETIC FIELD LIGHTING SYSTEM FOR BASEBALL DIAMOND #1 AND BASEBALL DIAMOND #2.

2 – THE ELECTRICAL CONTRACTOR SHALL DE-ENERGIZE AND MAKE SAFE THE ELECTRIC SERVICE TO THE SCOREBOARDS.

3 – THE ELECTRICAL CONTRACTOR SHALL DE-ENERGIZE AND MAKE SAFE THE ELECTRIC SERVICE TO THE CONCESSION STAND.

4 – THE ELECTRICAL CONTRACTOR SHALL COORDINATE DE-ENERGIZING THESE ELECTRIC SERVICES WITH NGRID INCLUDING A SHUTDOWNS.

5 – THE ELECTRICAL CONTRACTOR SHALL DISCONNECT AND MAKE SAFE ANY COMMUNICATION SYSTEMS TO THE CONCESSIONS STAND. COORDINATE WITH THE UTILITY COMPANY

6 – ANY ELECTRIC SERVICE, COMMUNICATION OR FIRE ALARM SHUTDOWN THAT AFFECTS SCHOOL OPERATION SHALL BE PERFORMED AFTER NORMAL SCHOOL HOURS ON PREMIUM TIME. THE SITE CONTRACTOR SHALL PROVIDE THE OWNER WITH TEN(10) DAYS WRITTEN NOTICE OF ANY REQUIRED SHUTDOWN OF ANY ELECTRICAL SERVICE. PRIOR TO ANY FIRE ALARM SHUTDOWN THE FIRE DEPARTMENT MUST BE GIVEN A TEN(10) DAY WRITTEN NOTICE OF SHUTDOWN. ALL COST ASSOCIATED WITH PREMIUM TIME SHUTDOWNS SHALL BE INCLUDED IN THE ELECTRICAL CONTRACTORS BID. ALL SHUTDOWNS SHALL BE KEPT TO THE MINIMUM TIME REQUIRED. AFTER NOTIFICATION FROM THE CONTRACTOR, THE OWNER SHALL APPROVE THE TIME AND DATE OF ALL SHUTDOWNS. THERE IS NO GUARANTEE THAT THE OWNER WILL ACCEPT A SHUTDOWN DATE, IF THE DATE CONFLICTS WITH SCHOOL OPERATION.

7 – ELECTRICAL CONTRACTOR SHALL COORDINATE DE-ENERGIZING THE FIELDS AND CONCESSIONS STAND INCLUDING ANY WORK REQUIRED WITHIN THE CASHMAN SCHOOL WITH THE OWNER AND ARCHITECT.

8 – ONCE ALL ELECTRICAL AND COMMUNICATION SERVICES TO THE FIELDS AND CONCESSION STAND ARE MADE SAFE, THE SITE DEMOLITION CONTRACTOR SHALL REMOVE AND DISPOSE OF ALL BOTH ATHLETIC FIELD LIGHTING INCLUDING 50'-0" POLES, BOTH SCOREBOARDS, ELECTRICAL EQUIPMENT AND ASSOCIATED CONDUIT AND WIRE.

9 – THE SITE DEMOLISH CONTRACTOR SHALL GIVE THE OWNER TWO WEEKS TO REMOVE ANY EQUIPMENT THEY DECIDE TO SALVAGE. OWNER TO MOVE AND TRANSPORT THE EQUIPMENT THEMSELVES.

LEGEND

EXISTING OVERHEAD AERIAL UTILITIES	OHV
EXISTING UNDERGROUND SECONDARY ELECTRIC SERVICE	E
EXISTING UNDERGROUND TELEPHONE CABLES	T
EXISTING UNDERGROUND FIBER OPTICS	F
EXISTING ELECTRICAL METER	XM
EXISTING ELECTRICAL MANHOLE	E
EXISTING TELEPHONE MANHOLE	T
EXISTING CABLE TELEVISION HANDHOLE	C
EXISTING ELECTRICAL HANDHOLE	E
EXISTING TELEPHONE HANDHOLE	T
EXISTING UTILITY POLE	
EXISTING UTILITY POLE WITH LIGHT	
EXISTING LIGHT POLE	
EXISTING MANHOLE	MH
X – EXISTING EQUIPMENT TO BE DISCONNECTED AND REMOVED	
XR – EXISTING EQUIPMENT TO BE RELOCATED	
XL – EXISTING EQUIPMENT TO BE RELOCATED	
XM – EXISTING EQUIPMENT TO REMAIN	

AMESBURY ELEMENTARY SCHOOL

AMESBURY, MA

DINISCO DESIGN architects + planners
99 Chauncy Street, Suite 901
Boston, MA 02111
(617) 426-2858

DGT Associates
Surveying & Engineers
1071 Worcester Road
Framingham, MA 01701
(508) 879-0030

Brown Sardina, Inc.
Landscape Architects
24 Roland Street
Boston, MA 02129
(617) 482-4703

Foley Buhl Roberts & Assoc., Inc.
Structural Engineers
2150 Washington Street
Newton, MA 02462
(617) 527-9600

Crabtree McGrath Assoc., Inc.
Food Service Consultants
161 West Main Street
Georgetown, MA 01833
(978) 352-8500

VAV International, Inc.
Mechanical Engineers
400 West Cummings Park S. 4700
Woburn, MA 01801
(781) 935-7228

Thompson Engineering Company, Inc.
Electrical Engineers
89 Newbury Street, Suite 103
Danvers, MA 01923
(617) 866-9066

EdVance Technology Design, Inc.
Technology Consultants
300 Brickstone Square, Suite 201
Andover, MA 01880
(978) 256-9900

KEY PLAN

NORTH ARROW (Called North) | STAMP

Date: 21 August 2020

Drawn By: JM, TD, EG

Scale: 0 40 80

Revisions

Number	Date	Description

90% COST ESTIMATE SET

Site Electrical Demolition Plan

10.1.01

© 2020 DiNisco Design

I:\18021 - Amesbury Elementary School\10.1.01 Dwg 8/14/2020 2:47:00 PM

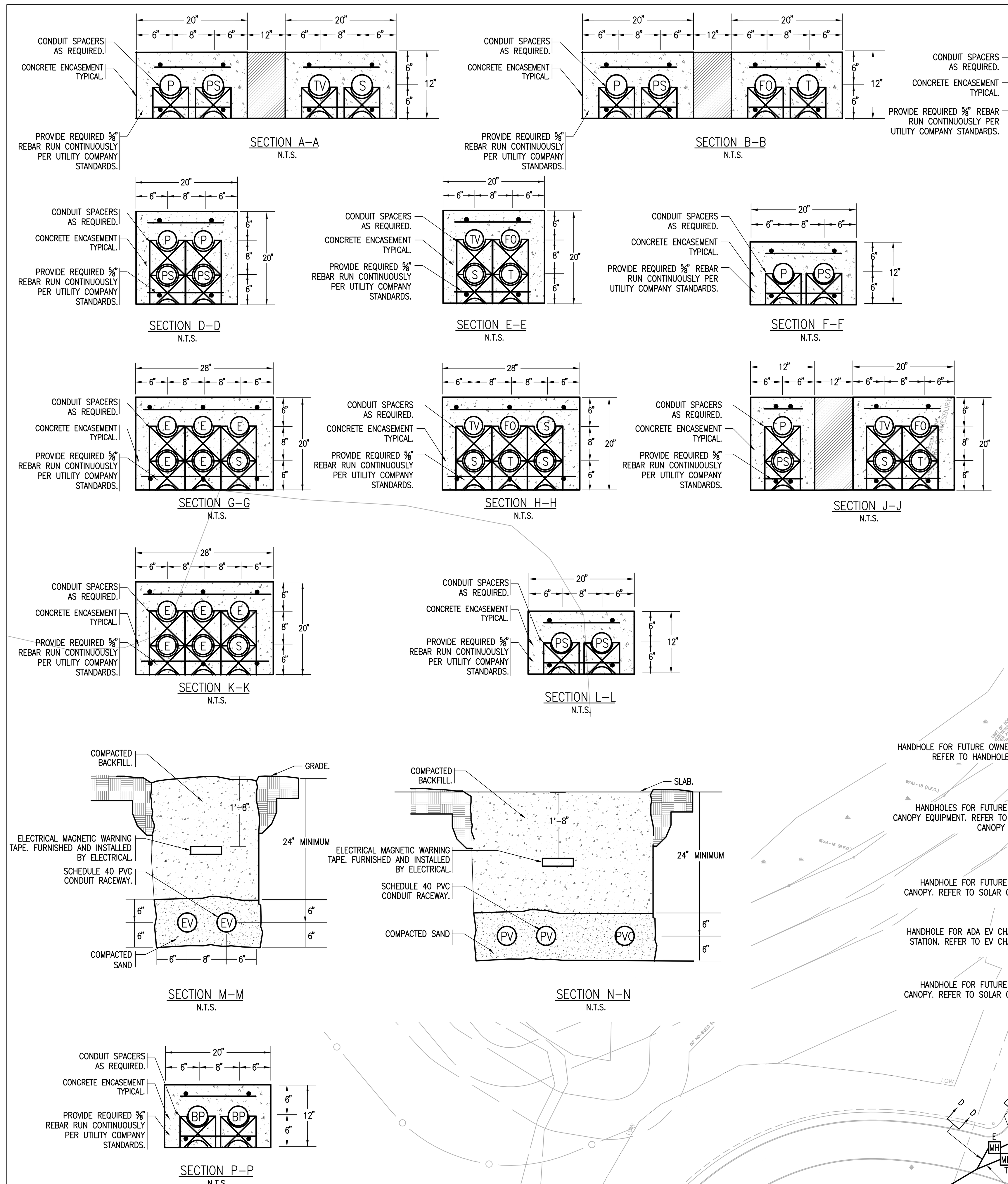

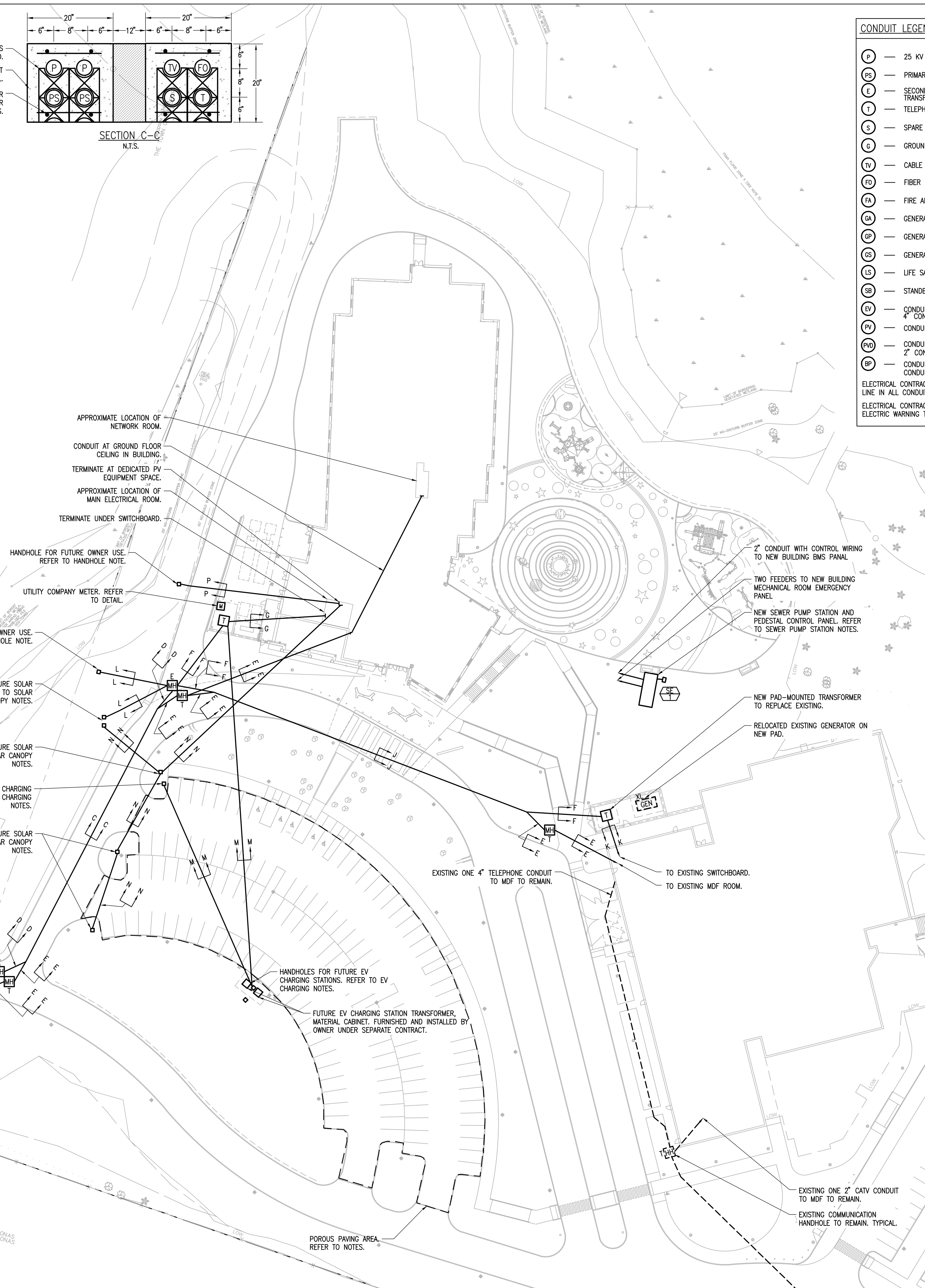



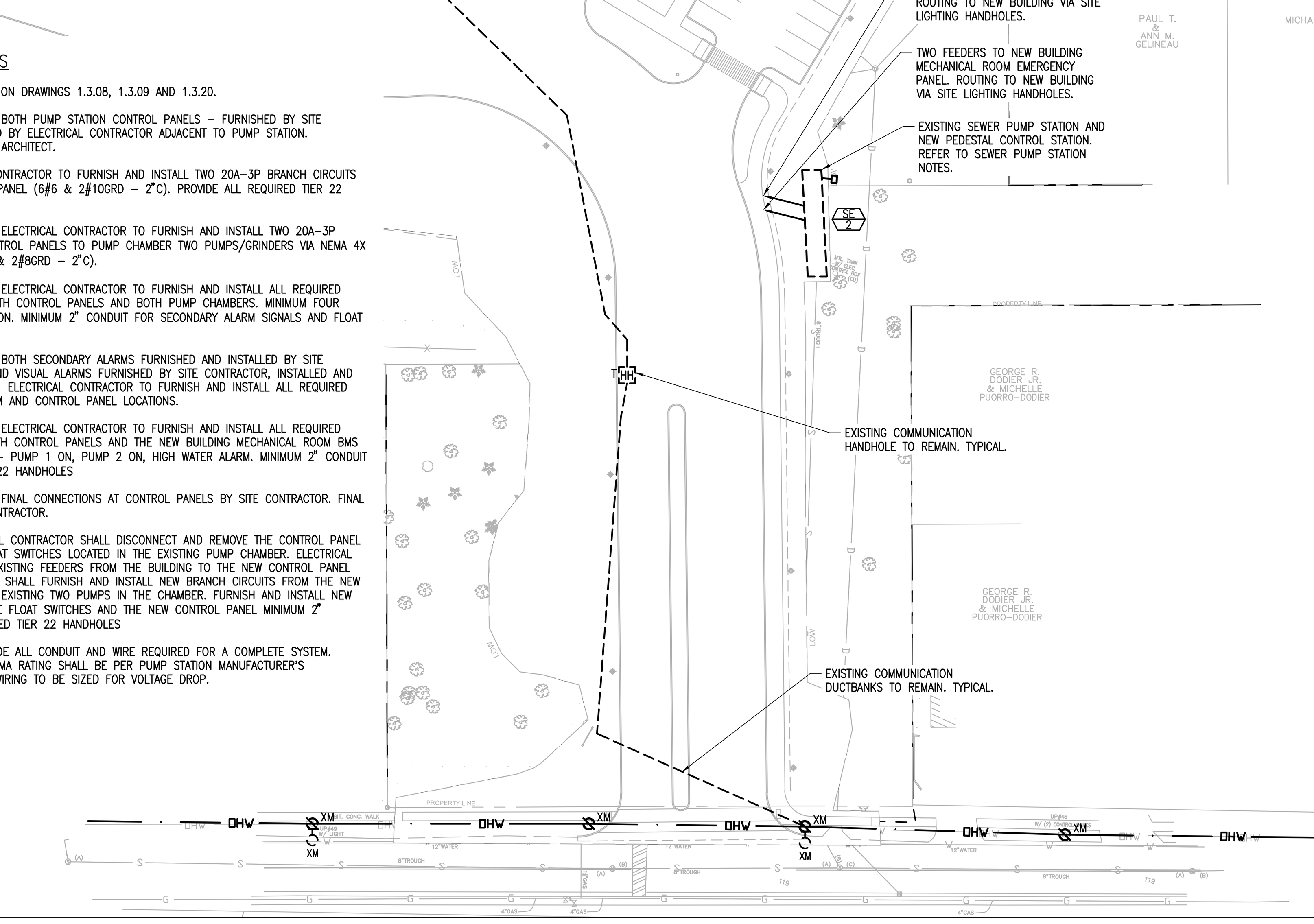

CONDUIT LEGEND

(P)	25 KV PRIMARY FEEDER – 5" CONDUIT
(PS)	PRIMARY SPARE – 5" CONDUIT
(E)	SECONDARY POWER FEEDERS FROM TRANSFORMER – 4" CONDUIT
(T)	TELEPHONE CONDUIT – 4" CONDUIT
(S)	SPARE CONDUIT – 4" CONDUIT
(G)	GROUND CONDUCTOR – 4" CONDUIT
(TV)	CABLE TV – 4" CONDUIT
(FO)	FIBER – 4" CONDUIT
(FA)	FIRE ALARM MUNICIPAL CIRCUIT – 2" CONDUIT
(GA)	GENERATOR ACCESSORY POWER – 4" CONDUIT
(GP)	GENERATOR REMOTE PANEL – 4" CONDUIT
(GS)	GENERATOR START WIRING – 4" CONDUIT
(LS)	LIFE SAFETY POWER FEEDERS – 4" CONDUIT
(SB)	STANDBY POWER FEEDERS – 4" CONDUIT
(EV)	CONDUIT FOR FUTURE EV CHARGING 4" CONDUIT
(PV)	CONDUIT FOR FUTURE PV SYSTEM – 4" CONDUIT
(PVD)	CONDUIT FOR FUTURE PV SYSTEM DATA – 2" CONDUIT.
(BP)	CONDUIT FOR FUTURE BATTERY POWER – 4" CONDUIT.

ELECTRICAL CONTRACTOR TO PROVIDE THE REQUIRED PULL LINE IN ALL CONDUITS

ELECTRICAL CONTRACTOR TO PROVIDE RED DETECTABLE ELECTRIC WARNING TAPE OVER ALL DUCTBANKS AND CONDUITS

LEGEND

EXISTING OVERHEAD AERIAL UTILITIES	— · — OHW —
EXISTING UNDERGROUND SECONDARY ELECTRIC SERVICE	– – – – E – – – – E –
EXISTING UNDERGROUND TELEPHONE CABLES	– – – – T – – – – T –
EXISTING UNDERGROUND FIBER OPTICS	– – – – F – – – – F –
EXISTING ELECTRICAL METER	XM M
EXISTING ELECTRICAL MANHOLE	E MH
EXISTING TELEPHONE MANHOLE	T MH
EXISTING CABLE TELEVISION HANDHOLE	C HH
EXISTING ELECTRICAL HANDHOLE	E HH
EXISTING TELEPHONE HANDHOLE	T HH
EXISTING UTILITY POLE	
EXISTING UTILITY POLE WITH LIGHT	
EXISTING LIGHT POLE	
EXISTING MANHOLE	MH
X – EXISTING EQUIPMENT TO BE DISCONNECTED AND REMOVED	
XR – EXISTING EQUIPMENT TO BE RELOCATED	
XL – EXISTING EQUIPMENT TO BE RELOCATED	
XM – EXISTING EQUIPMENT TO REMAIN	

IRRIGATION NOTES

1 – AT IRRIGATION CONTROLLER LOCATION IN WATER ROOM, ELECTRICAL CONTRACTOR TO FURNISH AND INSTALL A 20A–1P CIRCUIT (2#12 & 1#12 GRD – 3/4"C) FROM PANEL RP1C. PROVIDE DISCONNECT SWITCH.

2 – REFER TO LANDSCAPE AND IRRIGATION DRAWINGS FOR LOCATIONS OF CONTROLLERS.

HANDHOLE NOTES

1 – HANDHOLES TO BE SIZED PER CODE FOR CONDUITS ENTERING AND LEAVING EACH HANDHOLE. MINIMUM SIZE 17" X 32" X 30" DEEP UNLESS OTHERWISE NOTED. HANDHOLE SHALL BE TIER 22 RATED, FIBERGLASS, OPEN BOTTOM, AND SHALL BE QUAZITE FRP SERIES OR APPROVED EQUAL. COVERS TO BE FURNISHED WITH "ELECTRIC" ON THE COVER. FURNISH AND INSTALL 12" OF CRUSHED STONE BELOW HANDHOLES. COORDINATE EXACT LOCATION WITH ARCHITECT.

EV CHARGING STATION NOTES

1 – ELECTRICAL CONTRACTOR TO FURNISH AND INSTALL ONE 17"X32" TIER 22 OPEN BOTTOM HANDHOLES AT CAR CHARGING STATION LOCATION. FURNISH AND INSTALL 12" OF CRUSHED STONE BELOW HANDHOLES. FURNISH AND INSTALL MAGNETIC WARNING TAPE ABOVE ALL CONDUITS. COORDINATE EXACT LOCATION WITH ARCHITECT.

2 – ELECTRICAL CONTRACTOR TO FURNISH AND INSTALL TWO 4" CONDUITS WITH PULL LINES FROM THE PAD MOUNTED TRANSFORMER TO THE HANDHOLE LOCATION AS SHOWN ON PLANS.

3 – EV CHARGING EQUIPMENT AND ASSOCIATED FEEDERS FURNISH AND INSTALL BY OWNER UNDER SEPARATE CONTRACT.

SOLAR CANOPY NOTES

1 – ELECTRICAL CONTRACTOR TO FURNISH AND INSTALL ONE 36"X38"X30" DEEP TIER 22 OPEN BOTTOM HANDHOLE FOR EACH FUTURE PARKING SOLAR CANOPY LOCATION. FURNISH AND INSTALL 12" OF CRUSHED STONE BELOW HANDHOLES. FURNISH AND INSTALL MAGNETIC WARNING TAPE ABOVE ALL CONDUITS. COORDINATE EXACT LOCATION WITH ARCHITECT.

2 – ELECTRICAL CONTRACTOR TO FURNISH AND INSTALL TWO 4" CONDUIT WITH PULL LINES FROM THE FUTURE SOLAR CANOPY EQUIPMENT LOCATION TO EACH HANDHOLE LOCATION AS SHOWN ON PLANS. IN ADDITION PROVIDE TWO 4" CONDUITS BETWEEN HANDHOLES IN THE ISLANDS.

3 – ELECTRICAL CONTRACTOR TO FURNISH AND INSTALL TWO 4" CONDUIT WITH PULL LINES FROM THE FUTURE SOLAR CANOPY EQUIPMENT LOCATION TO THE PRIMARY ELECTRIC MANHOLE AS SHOWN ON PLANS.

4 – SOLAR CANOPY EQUIPMENT AND ASSOCIATED FEEDERS FURNISH AND INSTALL BY OWNER UNDER SEPARATE CONTRACT.

POROUS PAVING AREA NOTES

1 – WITHIN ALL PAVED AREAS USING POROUS ASPHALT, ALL ELECTRICAL DUCTBANKS AND CONDUITS INCLUDING FOR LIGHTING MUST BE AT LEAST 2'–6" BELOW GRADE TO TOP OF CONDUIT OR CONCRETE DUCTBANK. NO CONDUITS OR DUCTBANKS SHALL BE INSTALLED WITHIN THE POROUS ASPHALT PAVEMENT PROFILE.

2 – REFER TO THE CIVIL DRAWINGS INCLUDING DRAWING 1.3.02 FOR LOCATION OF POROUS ASPHALT.

SITE ELECTRICAL NOTES

NEW WORK

1 – GENERAL CONTRACTOR TO FURNISH AND INSTALL CONCRETE ENCASED UNDERGROUND DUCTBANKS AS SHOWN ON THE DRAWINGS. ELECTRICAL CONTRACTOR SHALL FURNISH AND INSTALL THE PVC CONDUITS AND ALL ACCESSORIES INCLUDING SPACERS IN THE DUCTBANKS. ELECTRICAL CONTRACTOR TO FURNISH AND INSTALL ALL ELECTRICAL MANHOLES, AND ALL REQUIRED ACCESSORIES, AND SET IN PLACE.

2 – NGRID TO FURNISH AND INSTALL THE PAD MOUNTED TRANSFORMERS FOR NEW BUILDING AND THE CASHMAN BUILDING.

3 – GENERAL CONTRACTOR TO FURNISH AND INSTALL CONCRETE PADS FOR TWO PAD–MOUNTED TRANSFORMERS FOR THE NEW BUILDING AND THE CASHMAN BUILDING.

4 – NGRID TO FURNISH AND INSTALL 25KV PRIMARY CABLES, BETWEEN 25KV ELECTRICAL SERVICE AND THE TWO PAD MOUNTED TRANSFORMERS. NGRID TO FURNISH AND INSTALL PRIMARY LOAD BREAK ELBOWS. FINAL PRIMARY CONNECTIONS AT TRANSFORMER BY NGRID. ELECTRICAL CONTRACTOR TO FURNISH AND INSTALL SECONDARY LUGS FOR BOTH TRANSFORMERS. ALL FINAL SECONDARY CONNECTIONS AT PAD MOUNTED TRANSFORMERS BY NGRID.

5 – NEW BUILDING: ELECTRICAL CONTRACTOR TO FURNISH AND INSTALL SECONDARY ELECTRIC SERVICE CABLES BETWEEN PAD MOUNTED TRANSFORMER AND MAIN SWITCHBOARD.

6 – CASHMAN BUILDING: ELECTRICAL CONTRACTOR TO FURNISH AND INSTALL SECONDARY ELECTRIC SERVICE CABLES BETWEEN PAD MOUNTED TRANSFORMER AND MAIN SWITCHBOARD.

7 – NGRID TO FURNISH AND INSTALL UTILITY COMPANY METER AT BOTH TRANSFORMERS. ELECTRICAL CONTRACTOR TO PROVIDE METER SOCKETS, CONDUITS, PEDESTAL AND PULL LINE.

8 – THE ELECTRICAL CONTRACTOR SHALL ENGAGE THE SERVICES OF A THIRD PARTY TESTING COMPANY TO PERFORM NETA STANDARD AND OPERATIONAL TESTING ON THE NEW BUILDING SWITCHBOARD AND THE EXISTING CASHMAN SWITCHBOARD.

9 – THE ELECTRICAL CONTRACTOR SHALL FURNISH AND INSTALL ALL REQUIRED FEEDERS TO THE RELOCATED CASHMAN GENERATOR (POWER, START WIRING AND CONTROL WIRING)

10 – GENERAL CONTRACTOR TO FURNISH AND INSTALL CONCRETE PAD AND ALL DUCTBANKS FOR THE RELOCATED CASHMAN GENERATOR.

11 – ELECTRICAL CONTRACTOR TO PROVIDE PULL LINES IN ALL CONDUITS INCLUDING CONDUITS FOR FUTURE USE.

12 – ALL CONDUITS TO BE INSTALLED BELOW VAPOR BARRIER. ALL CONDUITS TO BE INSTALLED DEEP ENOUGH TO ALLOW FOR PROPER CONDUIT SWEEPS THROUGH CONCRETE FLOOR SLAB.

13 – REFER TO THE ARCHITECTURAL PHASING DRAWINGS AND SPECIFICATIONS.

14 – ELECTRICAL CONTRACTOR TO FURNISH AND INSTALL METERING EQUIPMENT TO MONITOR ENERGY CONSUMED DURING CONSTRUCTION. GENERAL CONTRACTOR TO PAY FOR COST OF ENERGY CONSUMED DURING CONSTRUCTION.

15 – ELECTRICAL CONTRACTOR SHALL PROVIDE ALL LABOR AND MATERIAL REQUIRED TO INSTALL, MAINTAIN, RELOCATE AS REQUIRED, REMOVE, AND DISPOSE OF THE ENTIRE CONSTRUCTION TEMPORARY ELECTRICAL SERVICE INCLUDING OWNER AND GENERAL CONTRACTOR TRAILERS FOR THE CONSTRUCTION PERIOD.

16 – THE DIVISION 27 CONTRACTOR SHALL FURNISH AND INSTALL A 24–STRAND 10 GIGABYTE FIBER OPTIC CABLE FROM THE NEW ELEMENTARY SCHOOL MDF ROOM TO THE EXISTING CASHMAN SCHOOL MDF. THE DIVISION 27 CONTRACTOR SHALL FURNISH AND INSTALL A 12–STRAND 10 GIGABYTE FIBER OPTIC CABLE FROM THE NEW ELEMENTARY SCHOOL MDF ROOM TO THE EXISTING CASHMAN SCHOOL MDF. REFER TO DIVISION 27 TECHNOLOGY SPECIFICATION.

17 – THE DIVISION 27 CONTRACTOR SHALL MAINTAIN THE EXISTING FIBER OPTIC CABLE / CONDUIT FROM LIONS MOUTH ROAD TO THE EXISTING CASHMAN SCHOOL MDF.

18 – IN THE CASHMAN SCHOOL MDF, THE ELECTRICAL CONTRACTOR SHALL CONNECT ALL EXISTING RECEPTACLES TO THE EMERGENCY PANEL IN THE MAIN ELECTRIC ROOM. TYPICAL FOR TEN 20A/1P CIRCUITS.

SEWAGE PUMP STATION NOTES

1 – REFER TO SITE PLAN AND DETAILS ON DRAWINGS 1.3.08, 1.3.09 AND 1.3.20.

2 – NEW AND EXISTING SEWAGE PUMP: BOTH PUMP STATION CONTROL PANELS – FURNISHED BY SITE CONTRACTOR, INSTALLED AND WIRED BY ELECTRICAL CONTRACTOR ADJACENT TO PUMP STATION. COORDINATE EXACT LOCATION WITH ARCHITECT.

3 – NEW SEWAGE PUMP: ELECTRICAL CONTRACTOR TO FURNISH AND INSTALL TWO 20A–3P BRANCH CIRCUITS FROM PANEL SBDP1 TO CONTROL PANEL (6#6 & 2#10GRD – 2"C). PROVIDE ALL REQUIRED TIER 22 HANDHOLES.

4 – NEW AND EXISTING SEWAGE PUMP: ELECTRICAL CONTRACTOR TO FURNISH AND INSTALL TWO 20A–3P BRANCH CIRCUITS FROM BOTH CONTROL PANELS TO PUMP CHAMBER TWO PUMPS/GRINDERS VIA NEMA 4X JUNCTION BOX IN CHAMBER (6#6 & 2#8GRD – 2"C).

5 – NEW AND EXISTING SEWAGE PUMP: ELECTRICAL CONTRACTOR TO FURNISH AND INSTALL ALL REQUIRED FLOAT SWITCH WIRING BETWEEN BOTH CONTROL PANELS AND BOTH PUMP CHAMBERS. MINIMUM FOUR FLOAT SWITCHES EACH PUMP STATION. MINIMUM 2" CONDUIT FOR SECONDARY ALARM SIGNALS AND FLOAT SWITCHES.

6 – NEW AND EXISTING SEWAGE PUMP: BOTH SECONDARY ALARMS FURNISHED AND INSTALLED BY SITE CONTRACTOR. SECONDARY AUDIO AND VISUAL ALARMS FURNISHED BY SITE CONTRACTOR, INSTALLED AND WIRED BY ELECTRICAL CONTRACTOR. ELECTRICAL CONTRACTOR TO FURNISH AND INSTALL ALL REQUIRED WIRING BETWEEN SECONDARY ALARM AND CONTROL PANEL LOCATIONS.

7 – NEW AND EXISTING SEWAGE PUMP: ELECTRICAL CONTRACTOR TO FURNISH AND INSTALL ALL REQUIRED WIRING AND CONDUIT BETWEEN BOTH CONTROL PANELS AND THE NEW BUILDING MECHANICAL ROOM BMS PANEL FOR THREE ALARM POINTS – PUMP 1 ON, PUMP 2 ON, HIGH WATER ALARM. MINIMUM 2" CONDUIT AND PROVIDE ALL REQUIRED TIER 22 HANDHOLES

8 – NEW AND EXISTING SEWAGE PUMP: FINAL CONNECTIONS AT CONTROL PANELS BY SITE CONTRACTOR. FINAL CONNECTIONS AT BMS BY BMS CONTRACTOR.

9 – EXISTING SEWAGE PUMP: ELECTRICAL CONTRACTOR SHALL DISCONNECT AND REMOVE THE CONTROL PANEL AND FEEDERS TO PUMPS AND FLOAT SWITCHES LOCATED IN THE EXISTING PUMP CHAMBER. ELECTRICAL CONTRACTOR SHALL EXTEND THE EXISTING FEEDERS FROM THE BUILDING TO THE NEW CONTROL PANEL LOCATION. ELECTRICAL CONTRACTOR SHALL FURNISH AND INSTALL NEW BRANCH CIRCUITS FROM THE NEW CONTROL PANEL LOCATION TO THE EXISTING TWO PUMPS IN THE CHAMBER. FURNISH AND INSTALL NEW FLOAT SWITCH WIRING BETWEEN THE FLOAT SWITCHES AND THE NEW CONTROL PANEL MINIMUM 2" CONDUIT AND PROVIDE ALL REQUIRED TIER 22 HANDHOLES

10 – ELECTRICAL CONTRACTOR TO PROVIDE ALL CONDUIT AND WIRE REQUIRED FOR A COMPLETE SYSTEM. ELECTRICAL EQUIPMENT UL AND NEMA RATING SHALL BE PER PUMP STATION MANUFACTURER'S INSTALLATION REQUIREMENTS. ALL WIRING TO BE SIZED FOR VOLTAGE DROP.

AMESBURY ELEMENTARY SCHOOL

AMESBURY, MA

DINISCO DESIGN
architects + planners
99 Chauncy Street, Suite 901
Boston, MA 02111
(617) 426-2858

DGT Associates
Surveying & Engineers
1071 Worcester Road
Framingham, MA 01701
(508) 879-0030

Brown Sardina, Inc.
Landscape Architects
24 Roland Street
Boston, MA 02129
(617) 482-4703

Foley Buhl Roberts & Assoc., Inc.
Structural Engineers
2150 Washington Street
Newton, MA 02462
(617) 527-9600

Crabtree McGrath Assoc., Inc.
Food Service Consultants
161 West Main Street
Georgetown, MA 01833
(978) 352-8500

VAV International, Inc.
Mechanical Engineers
400 West Cummings Park S. 4700
Woburn, MA 01801
(781) 935-7228

Thompson Engineering Company, Inc.
Electrical Engineers
89 Newbury Street, Suite 103
Danvers, MA 01923
(617) 866-9066

EdVance Technology Design, Inc.
Technology Consultants
300 Brickstone Square, Suite 201
Andover, MA 01880
(978) 256-9900

KEY PLAN

NORTH ARROW — Called North

STAMP

Date: 21 August 2020

Drawn By: **JM, TD, EG**

Scale: 0 40 80

Revisions

Number	Date	Description

90% COST ESTIMATE SET

Site Power Plan

10.1.02

© 2020 DiNisco Design

I:\18011 - Amesbury Elementary School\10.1.02.dwg / 8/14/2020 3:54:14 PM

EXTERIOR GENERAL NOTES

1 – HANDHOLES TO BE SIZED PER CODE FOR CONDUITS ENTERING AND LEAVING EACH HANDHOLE. MINIMUM 15" X 22" X 18" DEEP. HANDHOLE SHALL BE TIER 22 RATED, FIBERGLASS, OPEN BOTTOM, WITH BARRIER TO SEPARATE 120V POWER FROM FIBER OPTICS CABLES AND SHALL BE QUAZITE FRP SERIES OR APPROVED EQUAL. COVERS TO BE FURNISHED WITH "CAMERA" ON COVER. FURNISH AND INSTALL 12" OF CRUSHED STONE BELOW HANDHOLES. FURNISH AND INSTALL MAGNETIC WARNING TAPE ABOVE ALL CONDUITS. COORDINATE EXACT LOCATION WITH ARCHITECT.

2 – ELECTRICAL CONTRACTOR TO FURNISH AND INSTALL FIBER OPTIC CABLES FROM CAMERA TO MDF ROOM IN 2" CONDUIT AND HANDHOLE. TYPICAL. REFER TO DIV 28 SPECIFICATIONS.

3 – ELECTRICAL CONTRACTOR TO FURNISH AND INSTALL A 20A/1P (2#4 & 1#6GRD) BRANCH CIRCUIT FROM THE NEAREST STANDBY POWER PANEL TO THE SURVEILLANCE CABINET LOCATED ON EACH POLE. SURVEILLANCE CABINET TO BE FURNISHED AND INSTALLED BY DIVISION 28 SUBCONTRACTOR. ELECTRICAL CONTRACTOR TO FURNISH AND INSTALL A 20A/1P RECEPTACLE IN THE SURVEILLANCE CABINET. TYPICAL FOR ALL POLES WITH SECURITY CAMERAS.

4 – ELECTRICAL CONTRACTOR TO INSTALL CAMERA POWER AND FIBER OPTIC CABLE WITHIN LIGHTING POLE. PROVIDE ALL REQUIRED EQUIPMENT INCLUDING WEATHERPROOF JUNCTION BOXES, HANDHOLES, ETC TO INSTALL THE WIRING. REFER TO DIVISION 28 SPECIFICATIONS.

5 – ELECTRICAL CONTRACTOR TO FURNISH AND INSTALL HANDHOLE, 2" CONDUIT TO NEAREST STANDBY PANEL AND 2" CONDUIT TO THE NEAREST MDF CLOSET FOR FUTURE USE BY THE OWNER. PROVIDE PULL LINES.

POROUS PAVING AREA NOTES

1 – WITHIN ALL PAVED AREAS USING POROUS ASPHALT, ALL ELECTRICAL DUCTBANKS AND CONDUITS INCLUDING FOR LIGHTING MUST BE AT LEAST 2'-6" BELOW GRADE TO TOP OF CONDUIT OR CONCRETE DUCTBANK. NO CONDUITS OR DUCTBANKS SHALL BE INSTALLED WITHIN THE POROUS ASPHALT PAVEMENT PROFILE

2 – REFER TO THE CIVIL DRAWINGS INCLUDING DRAWING 1.3.02 FOR LOCATION OF POROUS ASPHALT.

EXTERIOR LIGHTING FIXTURE NOTES

1 – ALL UNDERGROUND CONDUIT, ELBOWS AND COUPLINGS FOR EXTERIOR SITE LIGHTING SHALL BE SCHEDULE 40 PVC CONDUIT OR APPROVED EQUAL.

2 – ALL LIGHTING FIXTURE POLES AND BASES SHALL BE A MINIMUM OF 2'-6" FROM BACK EDGE OF CURBING. THE ELECTRICAL SUBCONTRACTOR SHALL COORDINATE THE EXACT LOCATION OF ALL LIGHTING FIXTURES WITH THE GENERAL CONTRACTOR, SITE CONTRACTOR, AND THE ARCHITECT. REFER TO THE LANDSCAPE ARCHITECT'S DRAWINGS FOR LIGHTING FIXTURE LOCATIONS.

3 – FURNISH AND INSTALL A ¾" X 10'-0" COPPER WELD GROUND ROD FOR FLAG POLE. CONNECT GROUND ROD TO FLAG POLE WITH 1#1/0 GROUND WIRE. THE GROUND WIRE SHALL BE CONNECTED TO THE FLAG POLE AND THE GROUND ROD USING THE CADWELD PROCESS.

4 – ALL EXTERIOR BRANCH CIRCUIT WIRING SHALL BE #6 AWG UNLESS OTHERWISE NOTED. ALL CONTINUOUS RUNS IN EXCESS OF 250'-0" FEET SHALL BE #4 AWG. ALL CONDUITS SHALL BE MINIMUM SIZE OF 1½".

5 – THE WIRING METHOD SHOWN FOR THE EXTERIOR LIGHTING IS INTENDED TO LIMIT THE VOLTAGE DROP TO ENSURE PROPER DRIVER/LAMP OPERATION. THE ELECTRICAL CONTRACTOR SHALL NOT EXCEED THE NUMBER OF FIXTURES SHOWN ON EACH RUN OF CONDUIT AND WIRE.

6 – ALL SITE LIGHTING CONDUIT ROUTING SHALL BE COORDINATED WITH ALL TREE AND PLANTING LOCATIONS SO THAT NO CONDUITS ARE INSTALLED WITHIN OR NEAR TREE AND PLANTING ROOT BULBS. COORDINATE CONDUIT ROOTING WITH SITE CONTRACTOR. INSTALLED IN A MANNER TO LIMIT DAMAGE.

7 – PRECAST CONCRETE LIGHTING POLE BASES SHALL BE FURNISHED AND INSTALLED BY THE ELECTRICAL CONTRACTOR.

8 – REFER TO ARCHITECTURAL DRAWINGS FOR LOCATIONS OF RECESSED FIXTURES IN SOFFITS.

9 – REFER TO ARCHITECTURAL DRAWINGS FOR LOCATIONS OF CANOPY MOUNTED FIXTURES, COORDINATE EXPOSED CONDUIT WITH CANOPY STRUCTURE AND CORES THROUGH STRUCTURAL MEMBERS.

LIGHTING HANDHOLE NOTES

1 – HANDHOLES TO BE SIZED PER CODE FOR CONDUITS ENTERING AND LEAVING EACH HANDHOLE. MINIMUM 15" X 22" X 18" DEEP. HANDHOLE SHALL BE TEIR 22 RATED, FIBERGLASS, OPEN BOTTOM, AND SHALL BE QUAZITE FRP SERIES OR APPROVED EQUAL. COVERS TO BE FURNISHED WITH "LIGHTING" ON COVER. FURNISH AND INSTALL 12" OF CRUSHED STONE BELOW HANDHOLES. FURNISH AND INSTALL MAGNETIC WARNING TAPE ABOVE ALL CONDUITS. COORDINATE EXACT LOCATION WITH ARCHITECT.

REFER TO EXTERIOR LIGHTING FIXTURE NOTE #8. TYPICAL

REFER TO EXTERIOR LIGHTING FIXTURE NOTE #8. TYPICAL

REFER TO EXTERIOR LIGHTING FIXTURE NOTE #8. TYPICAL

REFER TO LIGHTING HANDHOLE NOTES, TYPICAL.

TWO-SENSOR 180 DEGREE SECURITY CAMERA MOUNTED ON POLE. TYPICAL FOR TWO CAMERAS. REFER TO GENERAL NOTES #1,2,3,4.

REFER TO LIGHTING HANDHOLE NOTES TYPICAL.

TWO-SENSOR 180 DEGREE SECURITY CAMERA MOUNTED ON POLE. TYPICAL FOR ALL LOCATIONS. REFER TO GENERAL NOTES #1,2,3,4.

HANDHOLE. REFER TO GENERAL NOTES #1,5.

HANDHOLE. REFER TO GENERAL NOTES #1,5.

HANDHOLE. REFER TO GENERAL NOTES #1,5.

REFER TO GENERAL NOTES #1,2,3,4. TYPICAL.

HANDHOLE. TYPICAL

TWO-SENSOR 180 DEGREE SECURITY CAMERA MOUNTED ON POLE. TYPICAL FOR THREE CAMERAS. REFER TO GENERAL NOTES #1,2,3,4.

SCHOOL SIGN LIGHTING. COORDINATE EXACT LOCATION WITH ARCHITECT.

AMESBURY ELEMENTARY SCHOOL

AMESBURY, MA

DINISCO DESIGN
architects + planners
99 Chauncy Street, Suite 901
Boston, MA 02111
(617) 426-2858

DGT Associates
Surveying & Engineers
1071 Worcester Road
Framingham, MA 01701
(508) 879-0030

Brown Sardina, Inc.
Landscape Architects
24 Roland Street
Boston, MA 02129
(617) 482-4703

Foley Buhl Roberts & Assoc., Inc.
Structural Engineers
2150 Washington Street
Newton, MA 02462
(617) 527-9600

Crabtree McGrath Assoc., Inc.
Food Service Consultants
161 West Main Street
Georgetown, MA 01833
(978) 352-8500

VAV International, Inc.
Mechanical Engineers
400 West Cummings Park S. 4700
Woburn, MA 01801
(781) 935-7228

Thompson Engineering Company, Inc.
Electrical Engineers
89 Newbury Street, Suite 103
Danvers, MA 01923
(617) 866-9066

EdVance Technology Design, Inc.
Technology Consultants
300 Brickstone Square, Suite 201
Andover, MA 01880
(978) 256-9900

KEY PLAN

NORTH ARROW (Called North) | STAMP

Date: 21 August 2020

Drawn By: JM, TD, EG

Scale: 0 40 80

Revisions

Number	Date	Description

90% COST ESTIMATE SET

Site Lighting Plan

10.1.03

© 2020 DiNisco Design

I:\19017 - Amesbury Elementary School\10-13.dwg, 8/18/2020 4:08:41 PM

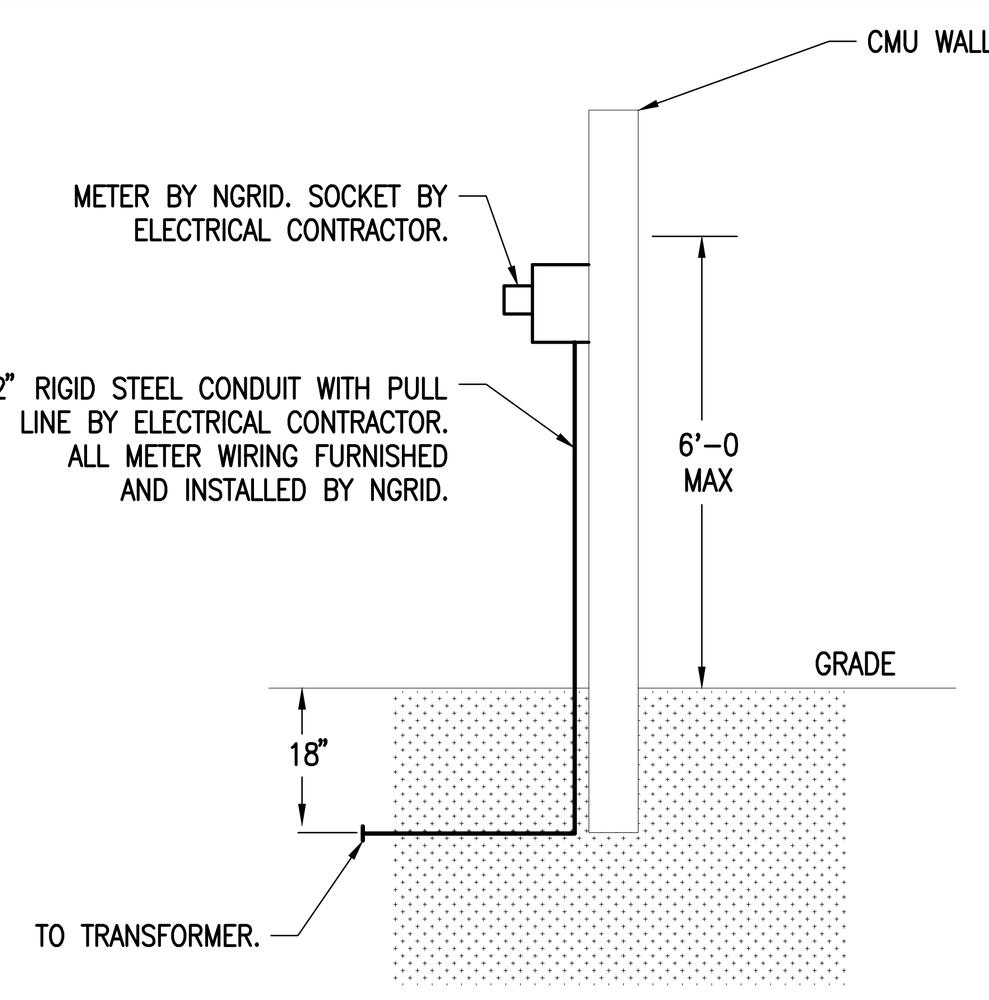

NEW BUILDING METERING PEDESTAL
N.T.S.

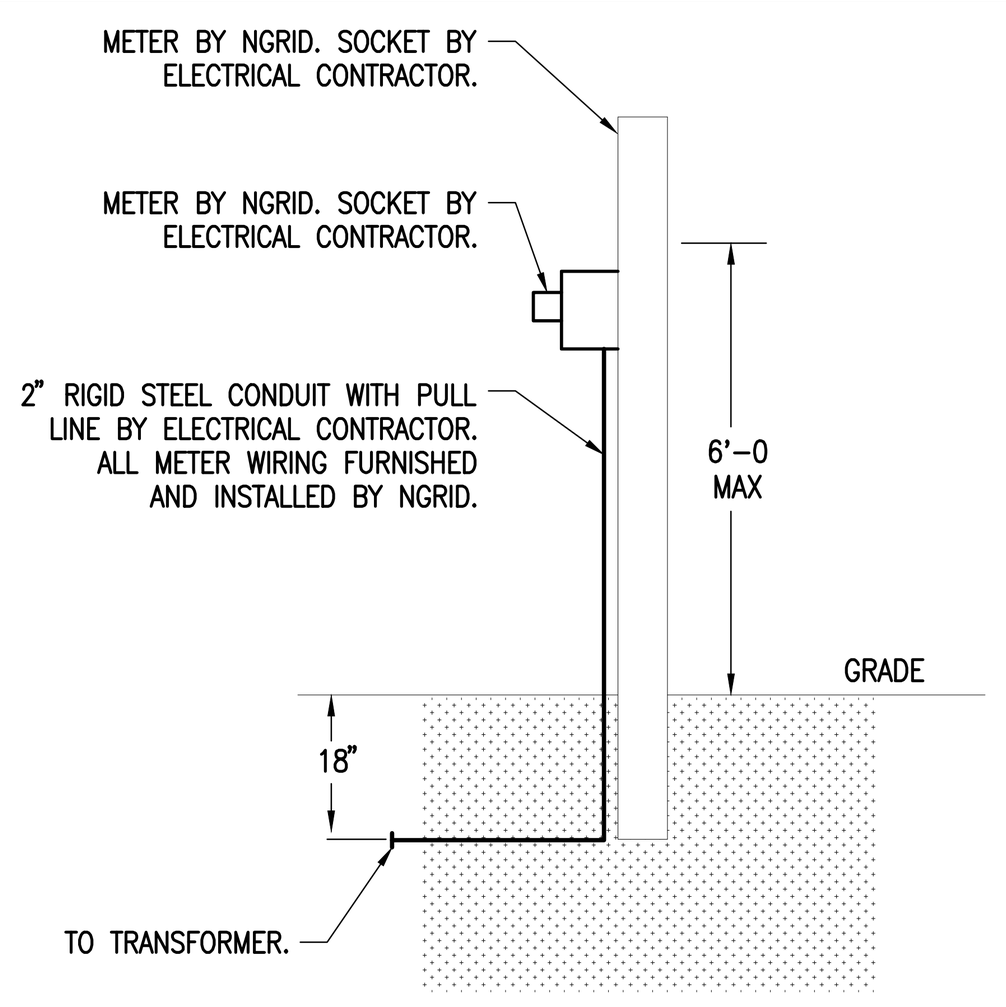

CASHMAN BUILDING METERING PEDESTAL
N.T.S.

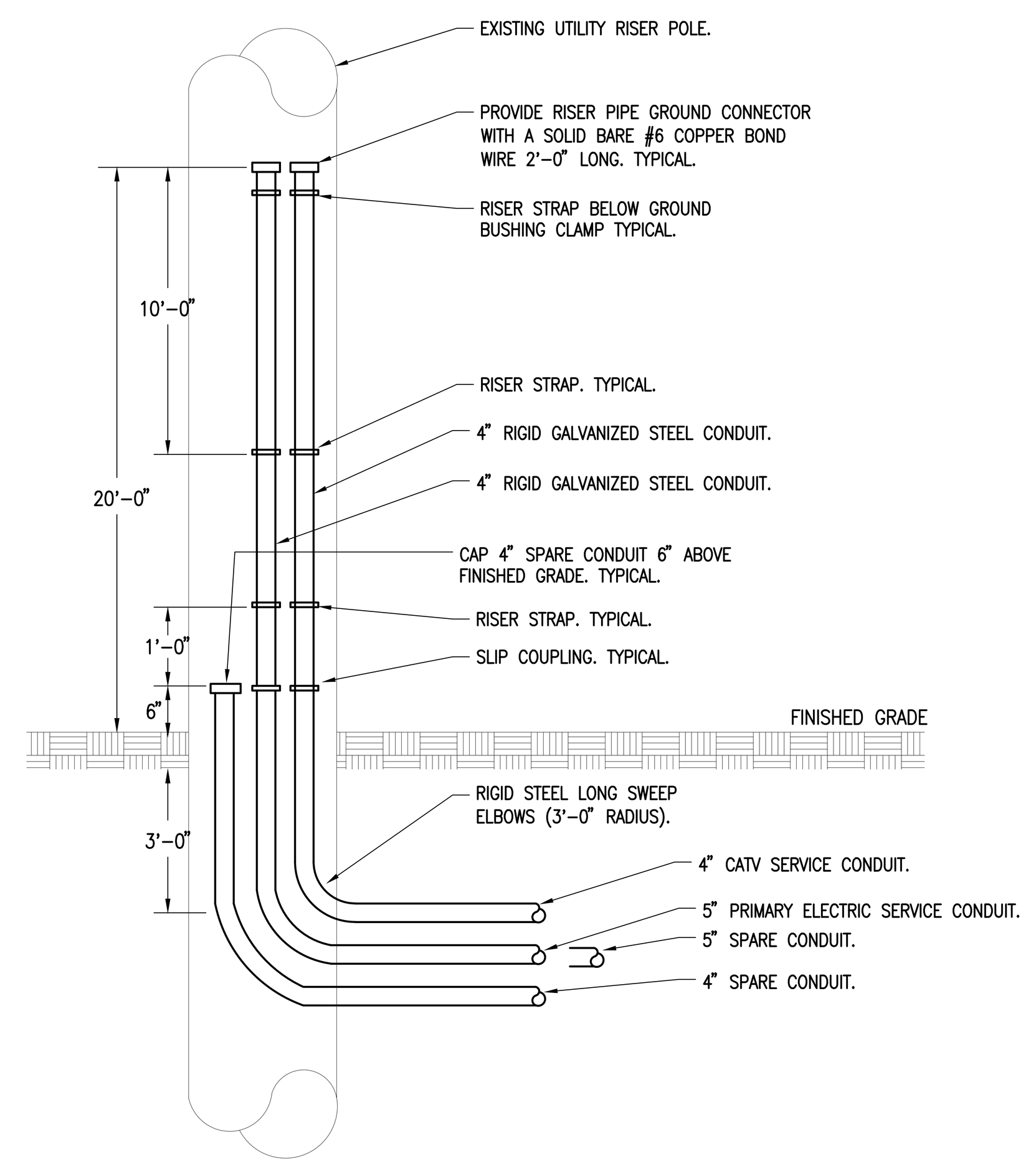

EXISTING PRIMARY ELECTRICAL AND TELECOMMUNICATION RISER POLE DETAIL
N.T.S.

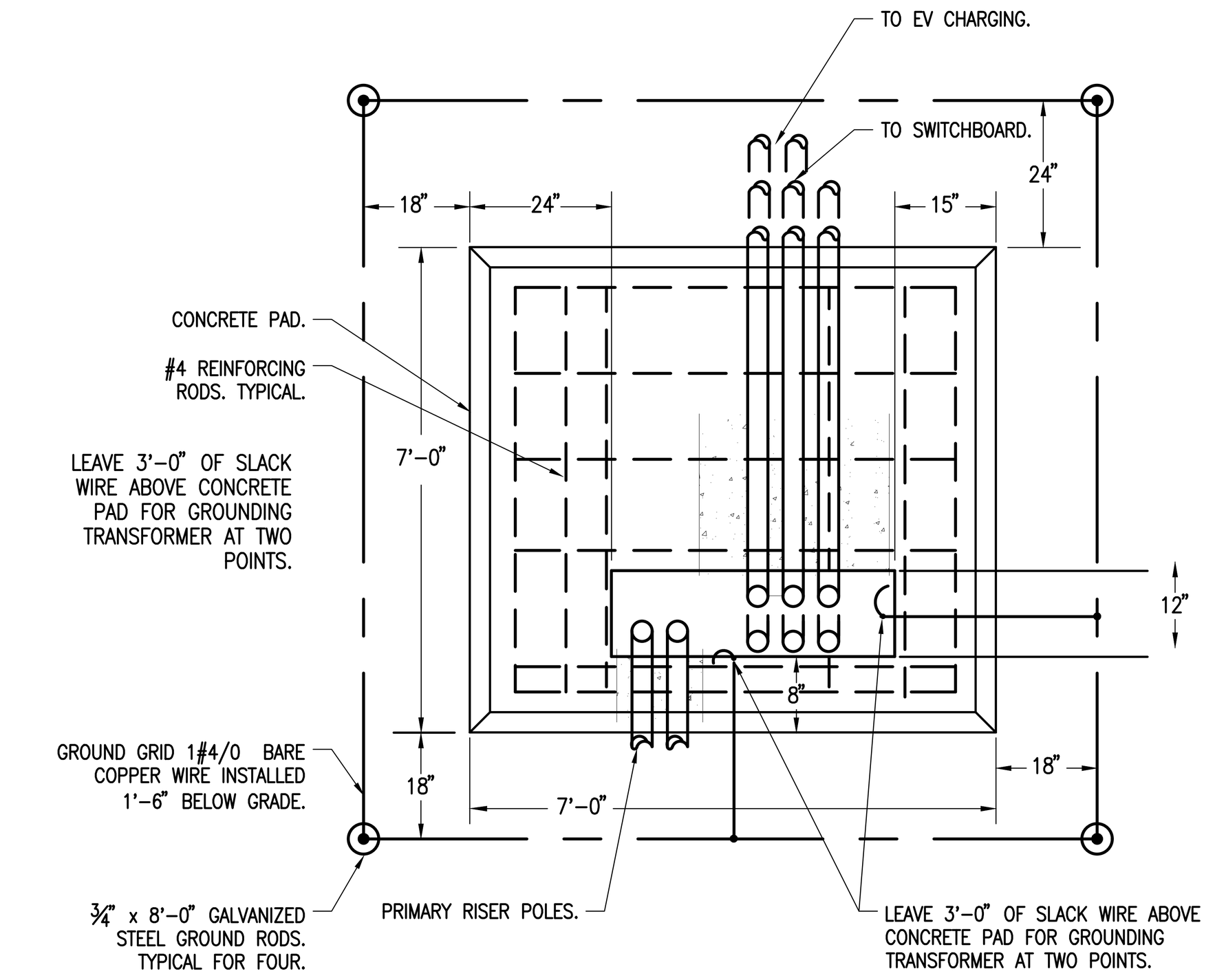

TOP VIEW

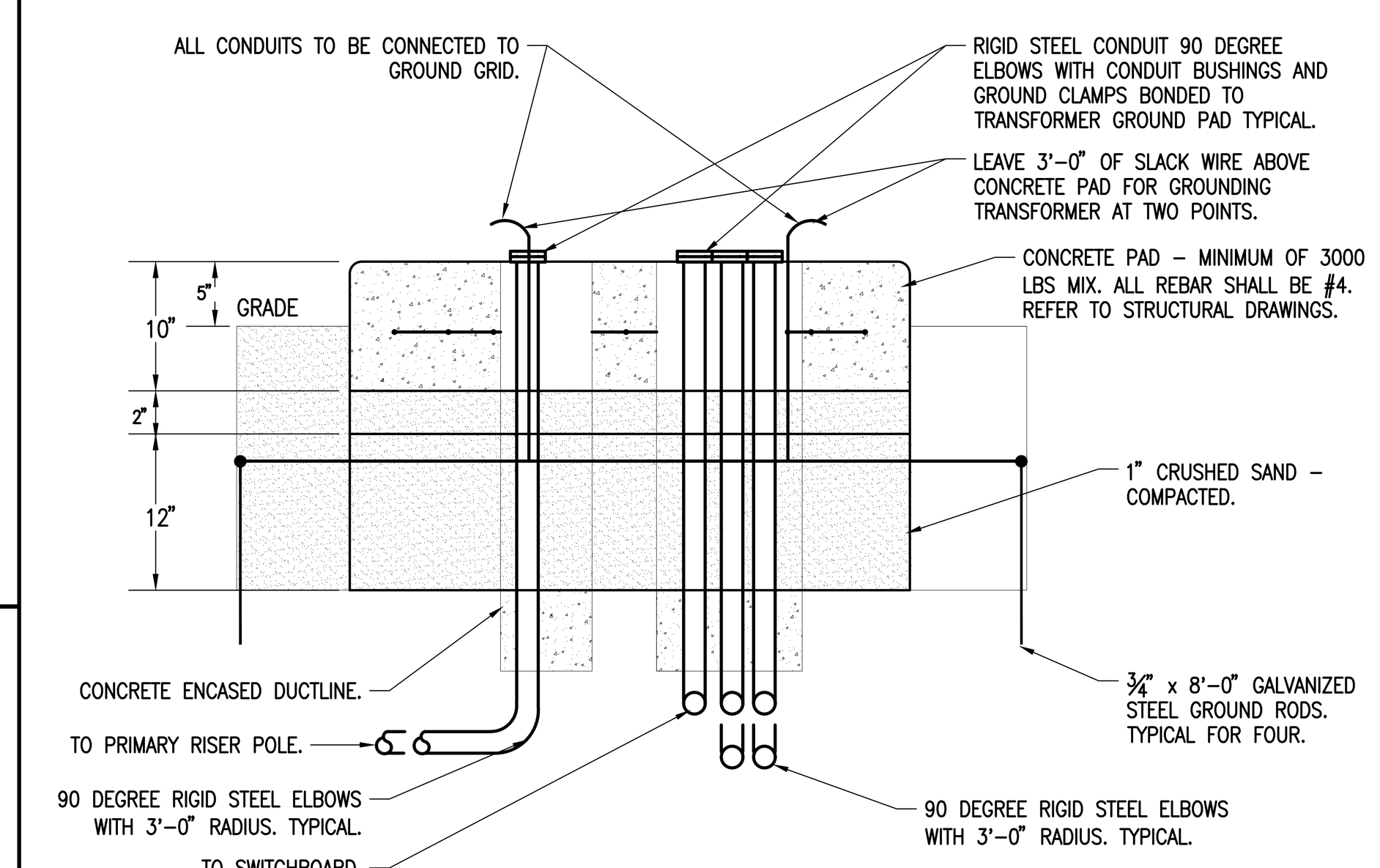

SECTION VIEW

TRANSFORMER CONCRETE PAD DETAIL
N.T.S.

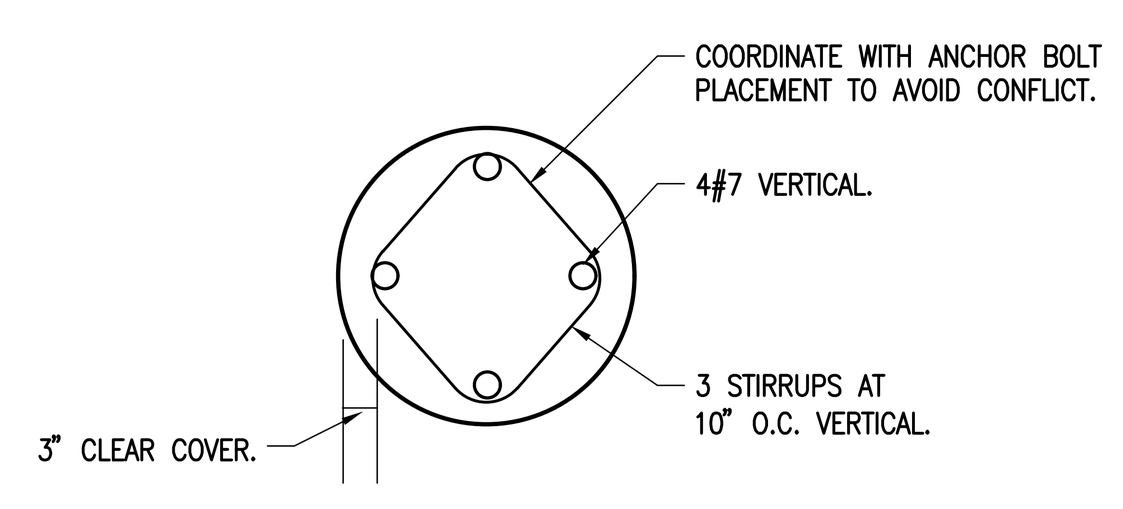

BASE DETAIL SHOWING REINFORCING
N.T.S.

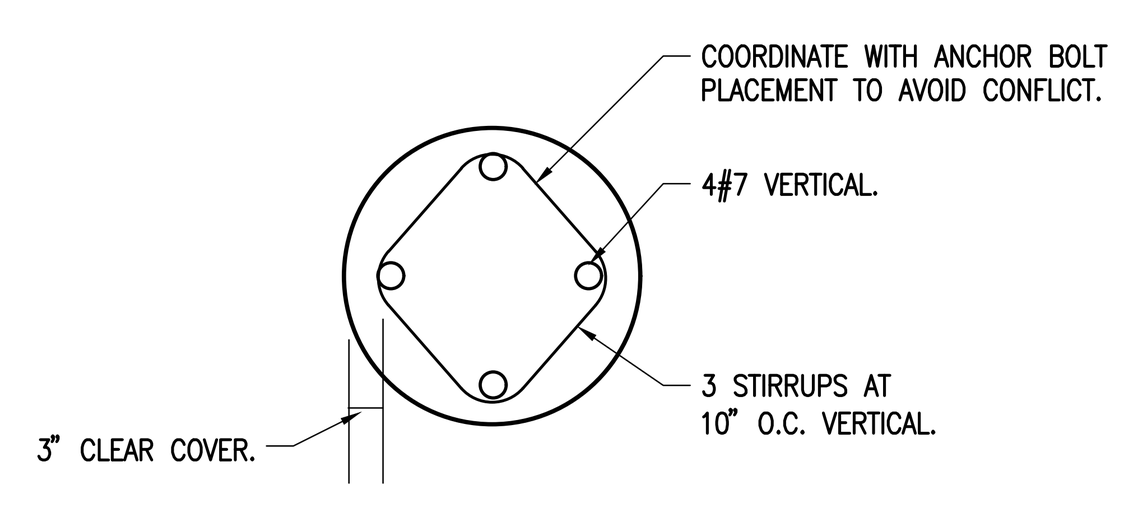

BASE DETAIL SHOWING REINFORCING
N.T.S.

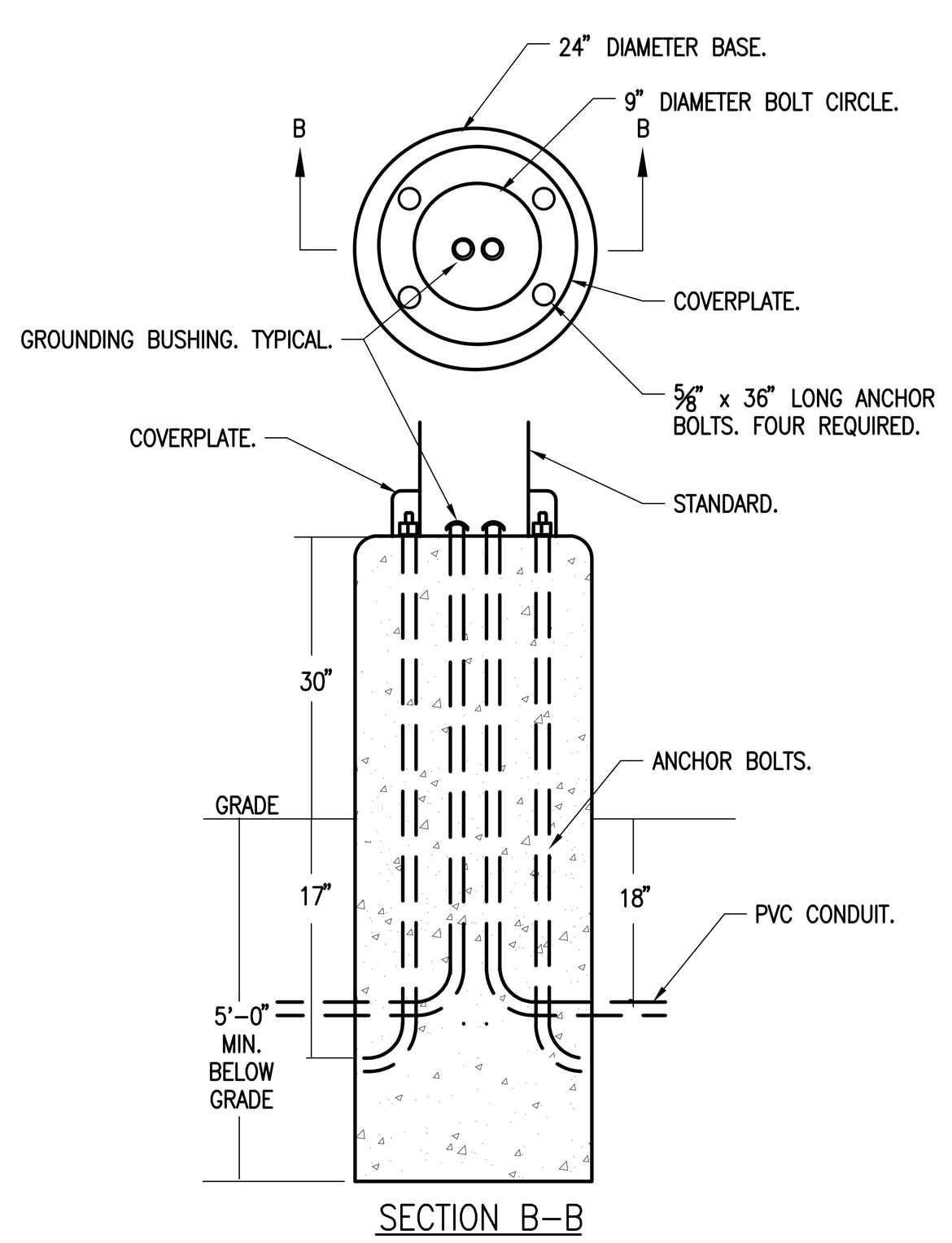

BASE DETAIL FOR LIGHTING FIXTURE G2 POLE BASE IN PARKING LOT
N.T.S.

POLE BASE NOTES

1 – COORDINATE POLE BASE REQUIREMENTS WITH EACH MANUFACTURER PRIOR TO POLE BASE INSTALLATION.

2 – TYPE G2 POLES LOCATED IN THE MIDDLE OF THE PARKING LOTS TO BE MOUNTED ON 24" ROUND PRECAST BASE FURNISHED AND INSTALLED BY ELECTRICAL CONTRACTOR. ELECTRICAL CONTRACTOR TO FURNISH AND INSTALL BOLT CIRCLE, ANCHOR BOLTS, AND CONDUIT.

3 – PRECAST CONCRETE POLE BASE FURNISH AND INSTALLED BY ELECTRICAL CONTRACTOR.

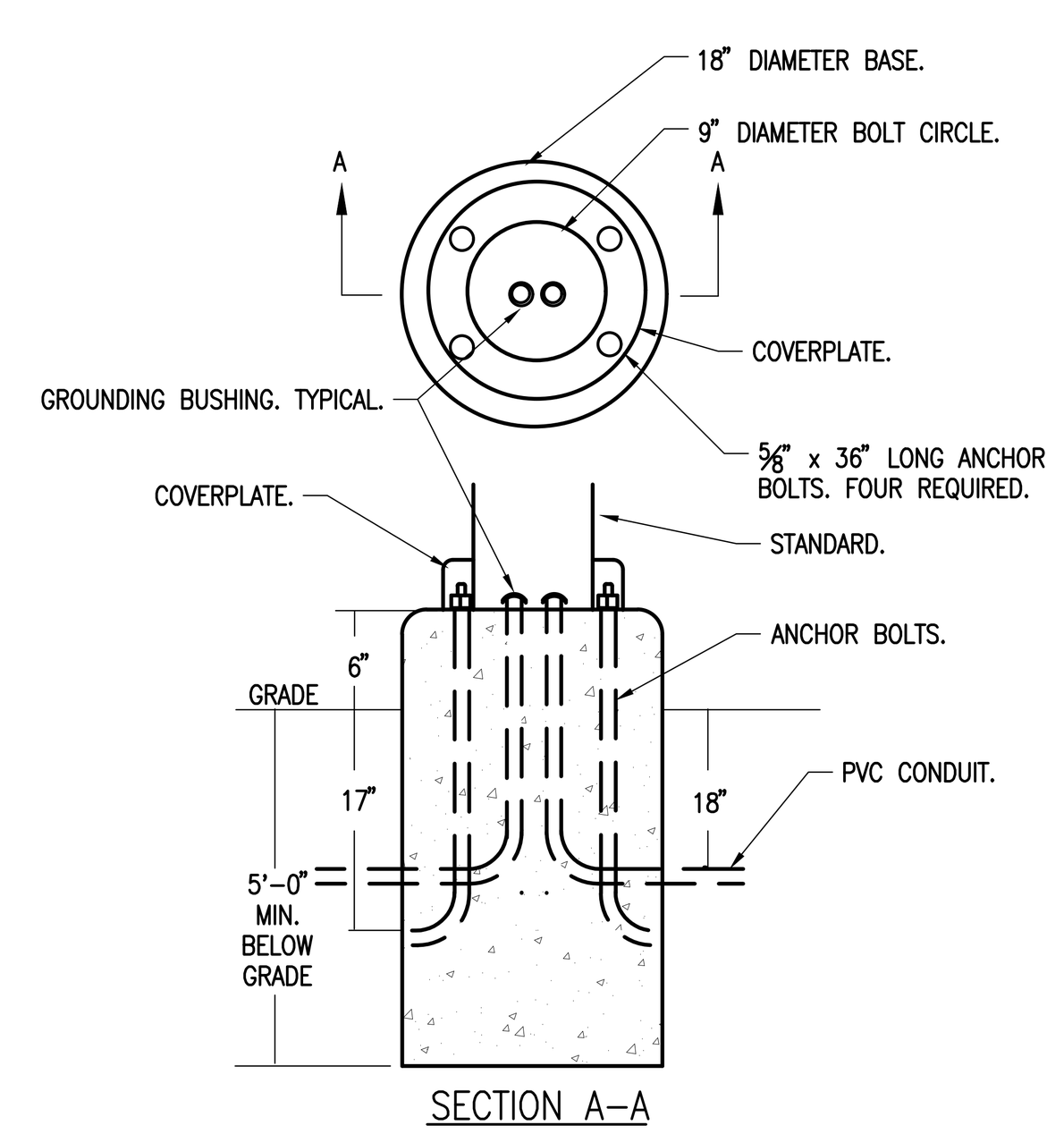

BASE DETAIL FOR LIGHTING FIXTURES G1, G2, G3, G4 POLE BASE
N.T.S.

POLE BASE NOTES

1 – COORDINATE POLE BASE REQUIREMENTS WITH EACH MANUFACTURER PRIOR TO POLE BASE INSTALLATION.

2 – TYPE G1, G2, G3, G4 POLES TO BE MOUNTED ON 18" ROUND PRECAST BASE FURNISHED AND INSTALLED BY ELECTRICAL CONTRACTOR. ELECTRICAL CONTRACTOR TO FURNISH AND INSTALL BOLT CIRCLE, ANCHOR BOLTS, AND CONDUIT.

3 – PRECAST CONCRETE POLE BASE FURNISH AND INSTALLED BY ELECTRICAL CONTRACTOR.

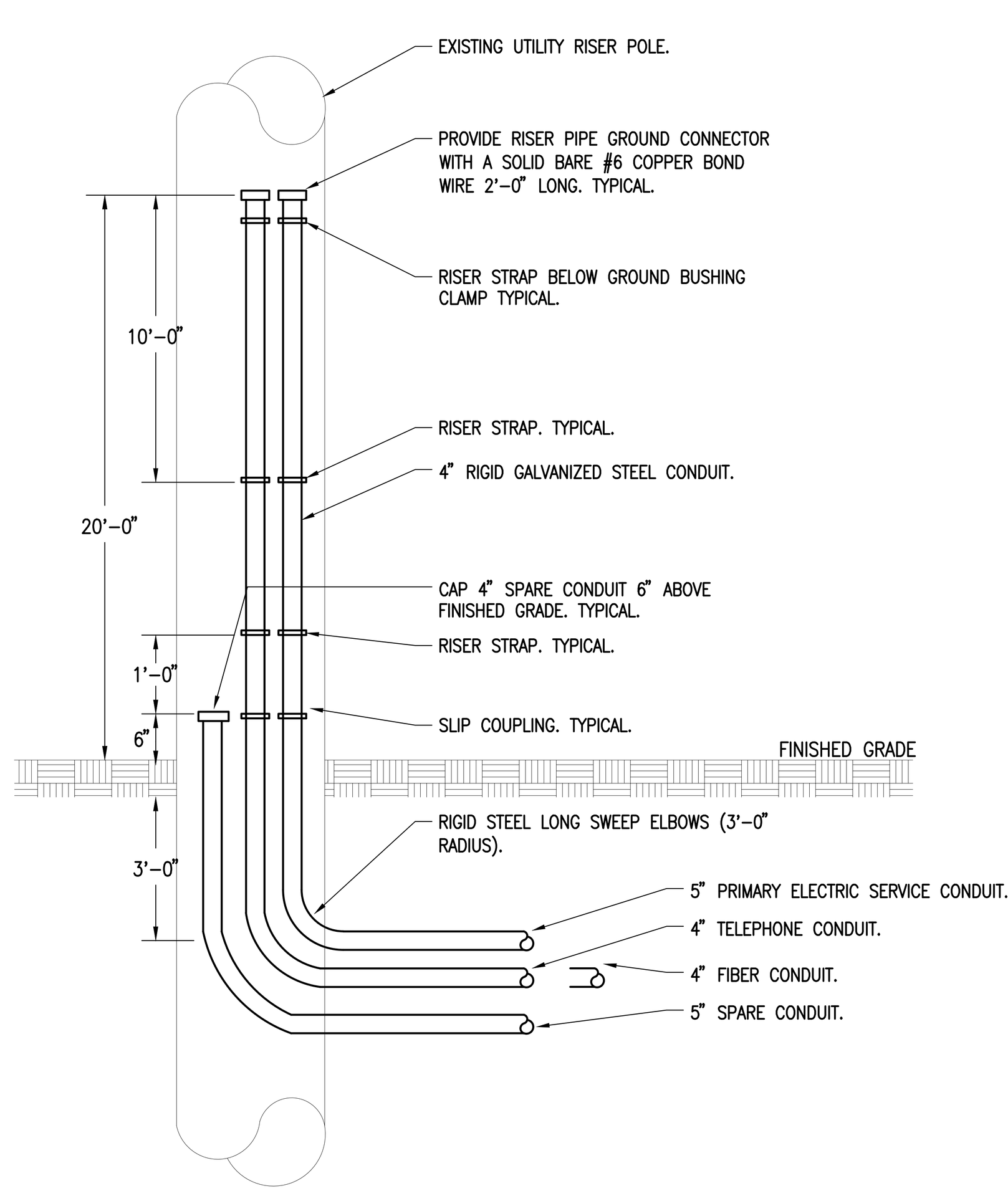

EXISTING PRIMARY ELECTRIC AND COMMUNICATION RISER POLE DETAIL
N.T.S.

GENERAL NOTES FOR MANHOLES AND DUCTBANKS

1 – BECAUSE OF LIMITED SPACE FOR UNDERGROUND UTILITIES, IT IS CRITICAL FOR THE ELECTRICAL SUBCONTRACTOR TO COORDINATE THE ELECTRIC SERVICE INSTALLATION WITH THE GENERAL CONTRACTOR, SITE SUBCONTRACTORS AND THE UTILITY COMPANIES.

2 – THE INSIDE DIMENSIONS OF THE REINFORCED CONCRETE ELECTRIC AND TELEPHONE MANHOLES SHALL BE 12'-0" LONG X 8'-0" WIDE X 8'-0" HIGH. MANHOLES SHALL BE OF THE PRECAST TYPE AND DESIGNED FOR STREET SERVICE (H-20 DESIGN).

3 – MANHOLE FRAME AND COVER SHALL BE E. L. LABARON FOUNDRY COMPANY #LE280 OR APPROVED EQUAL. THE WORD "ELECTRIC" OR "COMMUNICATION" SHALL BE CAST INTO EACH COVER.

4 – MANHOLES SHALL BE FURNISHED WITH PULLING-IN IRONS OPPOSITE EACH DUCT ENTRANCE. PULLING-IN IRONS SHALL BE LINE MATERIALS #DU2T2 OR APPROVED EQUAL.

5 – CABLE RACKS SHALL BE INSTALLED ON EACH WALL OF EACH MANHOLE. CABLE RACKS FOR ELECTRIC AND TELEPHONE MANHOLES SHALL BE A. B. CHANCE COMPANY OR APPROVED EQUAL. CABLE STATIONS #R1474, VEE TYPE CABLE RACK #1293 AND PORCELAIN INSULATORS #1115.

6 – FURNISH AND INSTALL TWO (2) 10' X 3/4" DIAMETER COPPERWELD GROUND RODS IN EACH MANHOLE. GROUND RODS SHALL BE LINE MATERIALS #WDN4C10 OR APPROVED EQUAL. ALL CABLE RACKS SHALL BE BONDED TO THE RESPECTIVE GROUND RODS WITH A #6 A. W. G. BARE STRANDED COPPER CONDUCTOR. ALL CONNECTIONS SHALL BE BY THE CADWELD PROCESS.

7 – ALL RACEWAYS SHALL BE PVC SCHEDULE 40 AND ENCASED IN CONCRETE UNLESS OTHERWISE NOTED. ALL PVC RACEWAYS ENTERING AND LEAVING MANHOLES SHALL BE FURNISHED WITH PVC END BELLS.

8 – ALL DUCTLINES SHALL BE INSTALLED A MINIMUM OF 2'-6" BELOW FINISHED GRADE TO TOP OF CONCRETE ENCASEMENT. ALL DUCTLINES SHALL PITCH TOWARD MANHOLES MAINTAINING A PITCH OF 4" PER 100 FEET. ALL DUCTLINES SHALL BE INSTALLED IN ACCORDANCE WITH THE REQUIREMENTS OF THE MASSACHUSETTS ELECTRIC CODE.

9 – ROUTE DUCTLINES IN SUCH A MANNER AS TO AVOID ALL TREES, SHRUBS, MANHOLES, CATCH BASINS, HYDRANTS, WATER PIPES, GAS PIPES, SEWER PIPES, ETC.

10 – AT ALL LOCATIONS WHERE DUCTLINES PASS OVER OR UNDER STEAM PIPES, A 4" PAD OF CORK INSULATION SHALL BE INSTALLED UNDER OR OVER THE ELECTRIC DUCTLINE.

11 – EXACT LOCATION OF THE ELECTRIC AND TELEPHONE MANHOLES SHALL BE DETERMINED BY THE ARCHITECT. ALL MANHOLE COVERS SHALL BE FLUSH WITH FINISHED GRADE. THE DISTANCE BETWEEN THE TOP OF THE ELECTRIC AND TELEPHONE MANHOLES AND FINISHED GRADE SHALL NOT EXCEED 1'-6".

12 – IT IS THE RESPONSIBILITY OF THE ELECTRICAL SUBCONTRACTOR TO COORDINATE WITH THE UTILITY COMPANIES AND THE LOCAL AUTHORITY HAVING JURISDICTION DURING THE UNDERGROUND UTILITY WORK.

13 – AT BASE OF PRIMARY RISER POLE AND AT THE TRANSFORMER CONCRETE PAD CHANGE PVC RACEWAYS TO RIGID STEEL CONDUITS. FURNISH AND INSTALL RIGID STEEL LONG SWEEP (36" RADIUS) ELBOWS FOR ALL CONDUITS TURNING UP RISER POLE AND TRANSFORMER PAD.

14 – ALL RADIUS BENDS IN THE CONCRETE ENCASED DUCTLINE SHALL BE GRADUAL. AT THESE LOCATIONS INSTALL 22-%%208 DEGREE RIGID STEEL ELBOWS.

15 – APPROXIMATELY 5'-0" OUTSIDE OF THE BUILDING FOUNDATION WALL CHANGE PVC RACEWAYS TO RIGID STEEL CONDUITS. ALL CONDUITS ENTERING THE BUILDING AND LOCATED UNDER THE BUILDING SHALL BE RIGID STEEL AND

16 – THE ELECTRIC SERVICE RACEWAY(S) PENETRATING THE FOUNDATION WALL OR FLOOR SLAB BELOW GRADE SHALL BE PROPERLY SEALED TO PREVENT THE INFILTRATION OF WATER INTO THE BUILDING. THE INTERIOR OF THE CONDUIT(S) SHALL BE SEALED UTILIZING OZ-GEDNEY TYPE "CSBG" CONDUIT SEALS OR APPROVED EQUAL. THE EXTERIOR OF THE CONDUIT(S) SHALL BE SEALED AT THE EXTERIOR WALL OR SLAB PENETRATION UTILIZING OZ-GEDNEY TYPE "WSK", "FSK" OR APPROVED EQUAL FOR A POURED CONCRETE WALL OR FLOOR SLAB. CONDUIT PENETRATIONS THROUGH EXISTING FOUNDATION WALLS OR FLOOR SLABS SHALL BE SEALED UTILIZING OZ-GEDNEY TYPE "CSMI" (INTERIOR OF STRUCTURE) AND "CSMC" (EXTERIOR OF STRUCTURE) OR APPROVED EQUAL. EXACT SIZE OF FITTINGS SHALL BE IN ACCORDANCE WITH CONDUIT SIZES.

17 – THE CONCRETE PAD FOR THE PAD MOUNTED TRANSFORMER SHALL BE CONSTRUCTED IN ACCORDANCE WITH NGRID STANDARDS. PRIOR TO THE CONSTRUCTION OF THE CONCRETE PAD, VERIFY ALL PAD DIMENSIONS WITH THE NGRID COMPANY. PAD MOUNTED TRANSFORMER SHALL BE FURNISHED AND SET IN PLACE BY NGRID COMPANY.

18 – THE SITE DEMOLITION SUBCONTRACTOR SHALL REMOVE THE EXISTING UTILITY POLES AND UNDERGROUND DUCTBANKS AS NOTED ON THE SITE PLAN. THE ELECTRICAL SUBCONTRACTOR SHALL DISCONNECT ALL UNDERGROUND AND OVERHEAD CABLES, TELEPHONE CABLES, FIRE ALARM, AND SITE LIGHTS AND ASSOCIATED WIRING. COORDINATE WITH NGRID AND VERIZON.

19 – ALL DUCTBANK RUNNING UNDER THE BUILDING SHALL NOT BE INSTALLED WITHIN THE 6" FLOOR SLAB. AT LOCATIONS WHERE CONDUITS ARE TO TURN UP THROUGH THE SLAB. THE CONDUITS SHALL BE INSTALLED LOWER IN THE GROUND SO THAT ALL RIGID 90 DEGREE ELBOWS ARE PROPERLY INSTALLED. GENERAL CONTRACTOR TO PROVIDE ALL EXCAVATING AND BACKFILLING REQUIRED.

20 – ALL MANHOLES AND ASSOCIATED EQUIPMENT TO BE INSTALLED BY ELECTRICAL SUBCONTRACTOR AND INSTALLED BY THE GENERAL CONTRACTOR. ALL CONCRETE, FORMS, TRENCHING, BACKFILL, ETC SHALL BE FURNISHED AND INSTALLED BY THE GENERAL CONTRACTOR.

MANHOLE NOTES

1 – THE CONCRETE ENCASED DUCTLINE SHALL BE STRUCTURALLY CONNECTED TO THE MANHOLES. AS THIS IS A SHEAR POINT IT IS VERY IMPORTANT, THAT THIS REQUIREMENT IS ADHERED TO.

2 – DRILL INTO MANHOLE WINDOW WALL FOR INSERTION OF DOWELS. DOWELS SHALL BE OF THE SAME SIZE AND SPACING AS THE DUCTLINE RE-BARS. OVERLAP DOWELS AND RE-BARS A MINIMUM OF 30 DIAMETERS. DOWELS SHALL BE GROUTED WITH NON-SHRINKING GROUT (POROC) OR APPROVED EQUAL. TIE DOWELS TO DUCTLINE RE-BARS.

GENERAL NOTES FOR TRANSFORMER PAD AND PRIMARY CABLE RISER POLE

1 – THE FOUNDATION AND THE GROUND GRID FOR THE PAD MOUNTED TRANSFORMER SHALL BE CONSTRUCTED IN ACCORDANCE WITH NGRID STANDARD.

2 – THE PRIMARY RISER POLE INSTALLATION SHALL BE IN ACCORDANCE WITH NGRID STANDARD.

3 – THE TRANSFORMER CONCRETE PAD SPECIFICATIONS SHALL BE IN ACCORDANCE WITH NGRID STANDARD.

4 – ALL SECONDARY CABLE CONNECTIONS TO THE PAD MOUNTED TRANSFORMER SHALL BE IN ACCORDANCE WITH NGRID STANDARD.

5 – THE PRIMARY DUCTBANK SHALL BE CONSTRUCTED IN ACCORDANCE WITH NGRID STANDARDS.

NOTES:

THE ELECTRICAL CONTRACTOR SHALL VERIFY THE EXACT GENERATOR PAD SIZE AND CONSTRUCTION METHOD WITH THE GENERATOR MANUFACTURER.

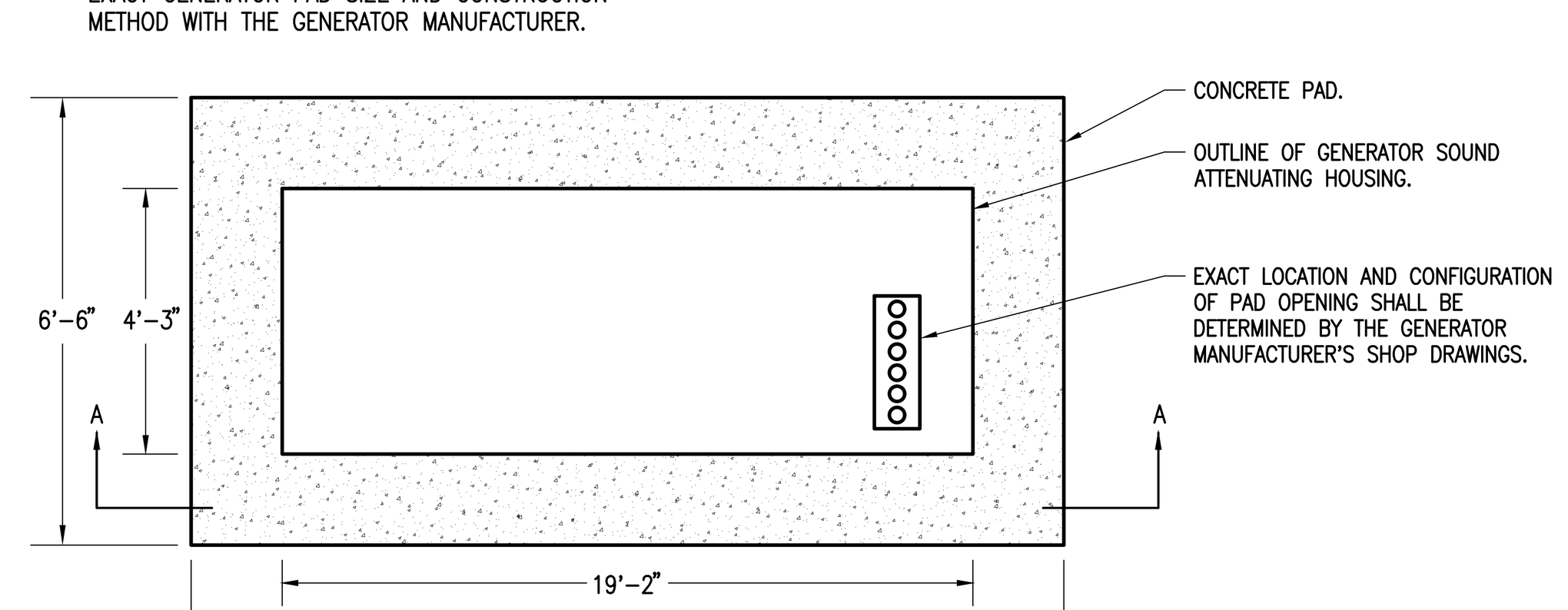

CASHMEN SCHOOL DETAIL OF EMERGENCY GENERATOR PAD
N.T.S.

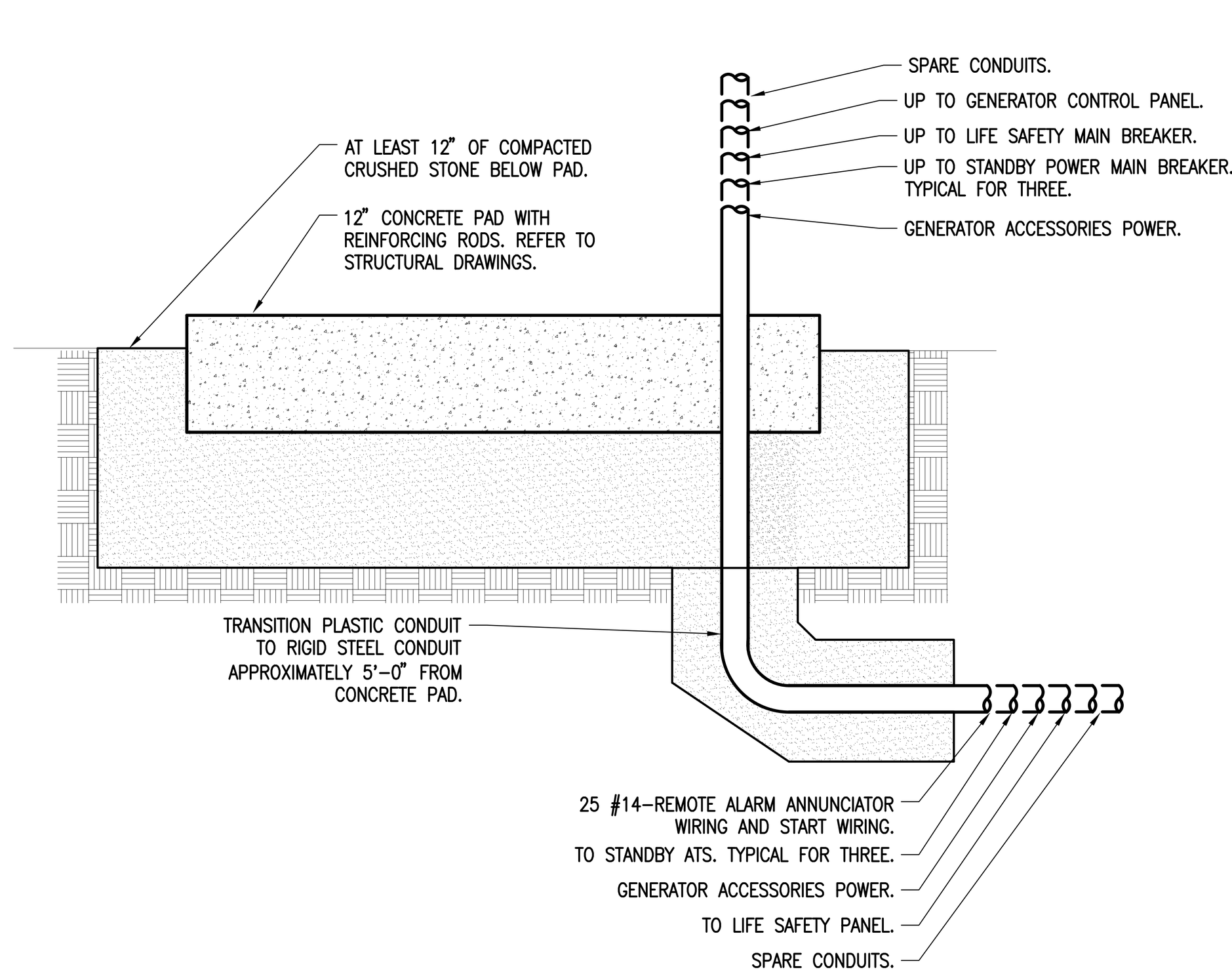

CASHMEN SCHOOL SECTION A-A
N.T.S.

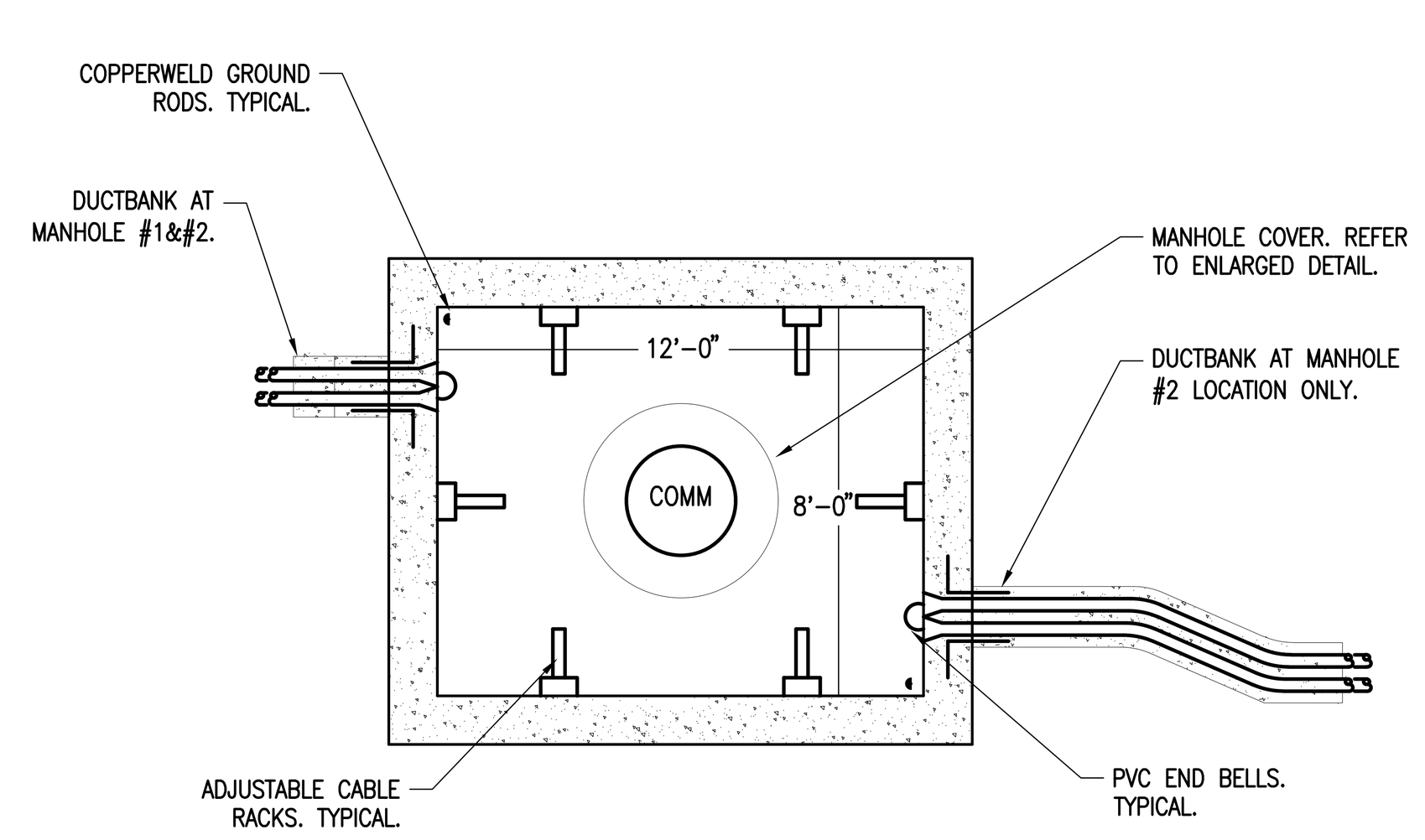

PLAN VIEW OF COMMUNICATION MANHOLE
N.T.S.

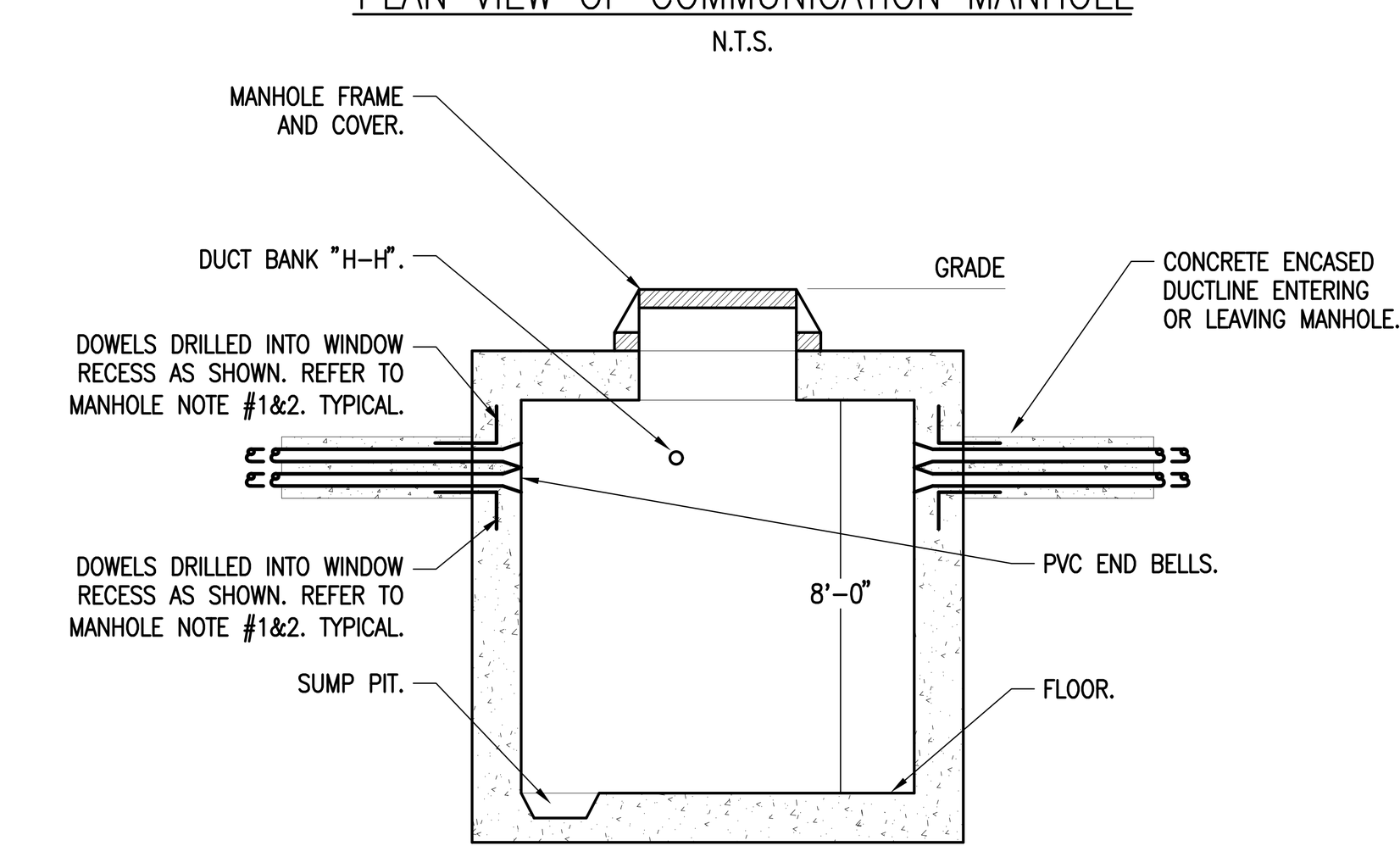

TYPICAL COMMUNICATION MANHOLE SECTION
N.T.S.

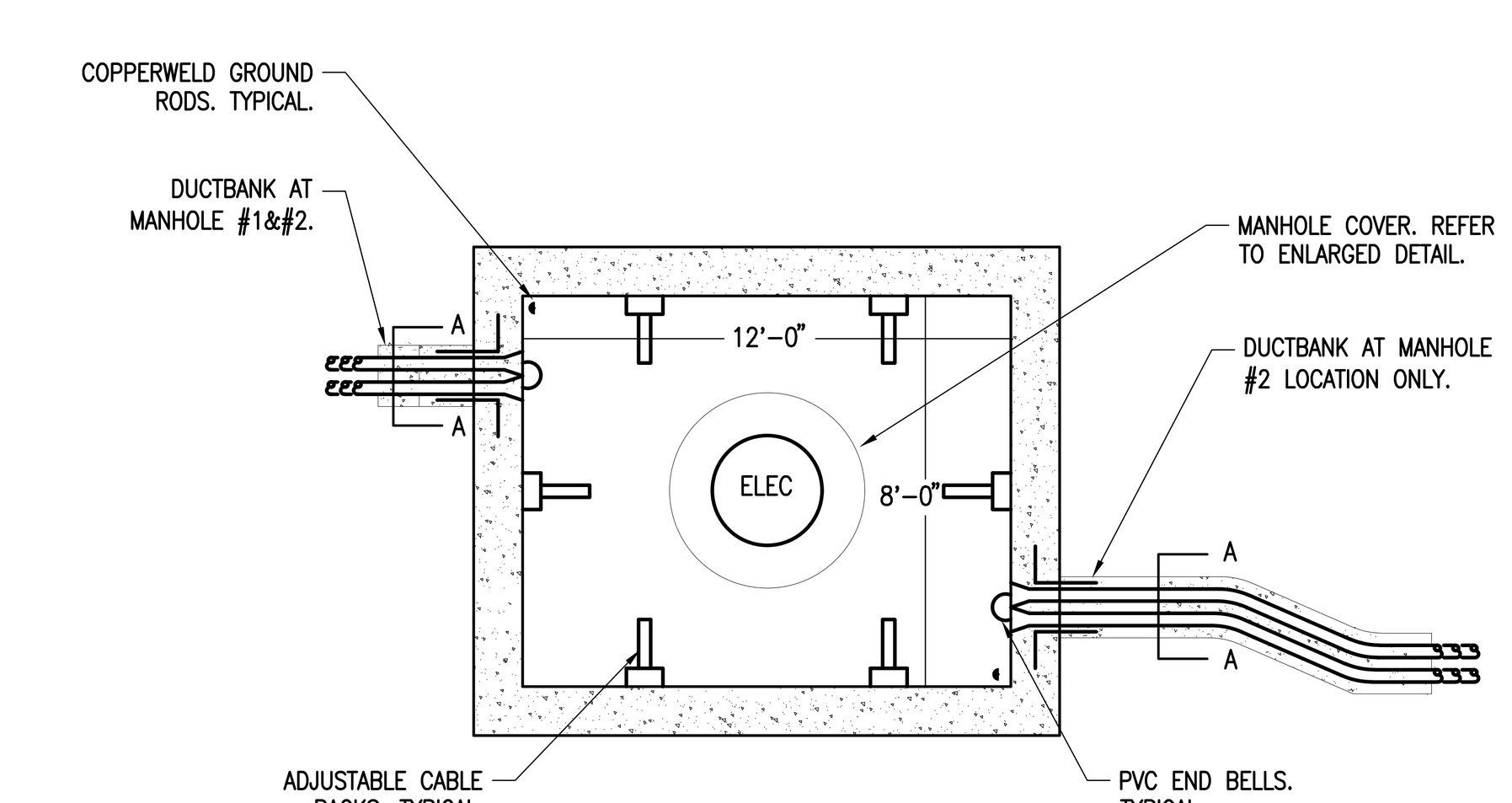

PLAN VIEW OF ELECTRICAL MANHOLE
N.T.S.

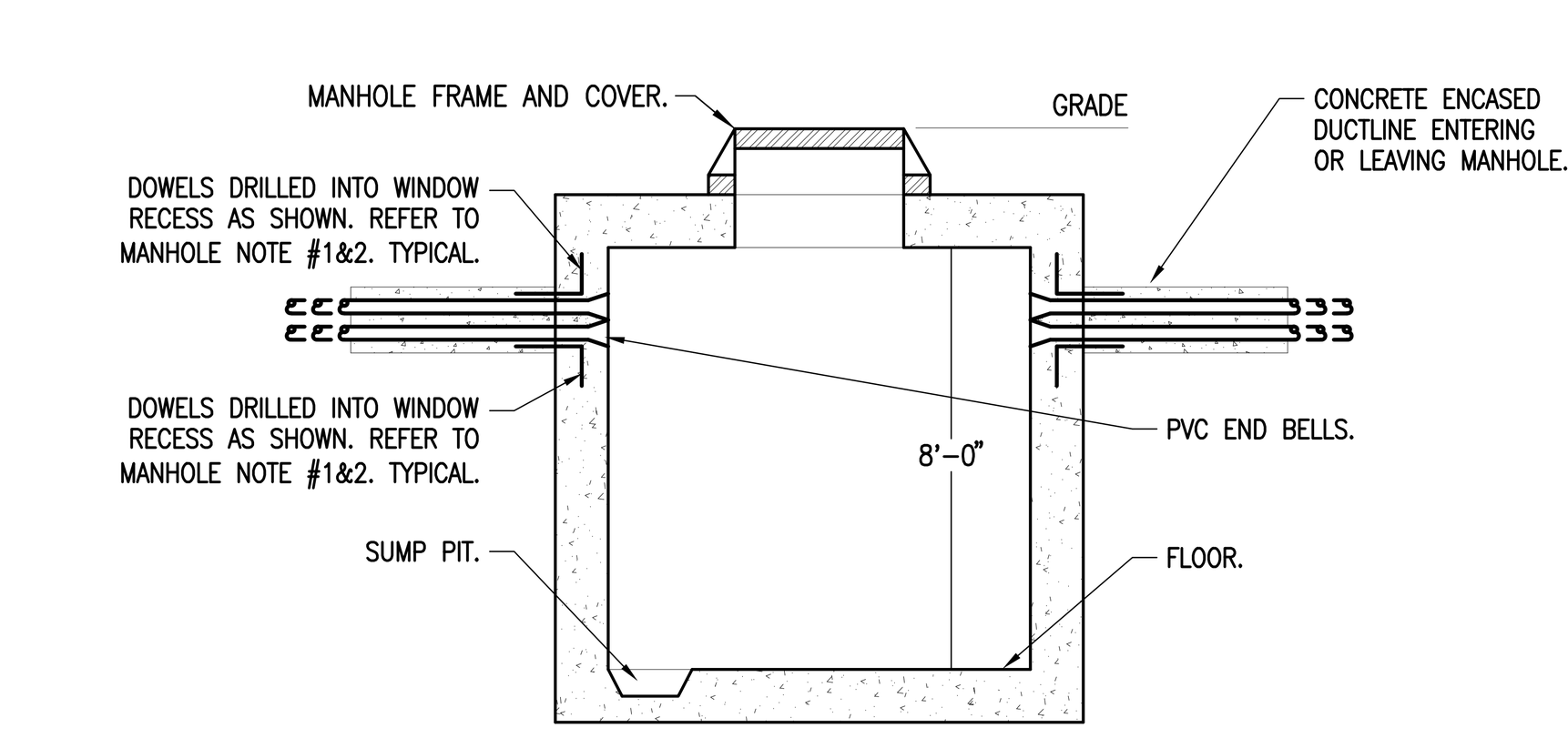

TYPICAL ELECTRICAL MANHOLE SECTION
N.T.S.

AMESBURY ELEMENTARY SCHOOL

AMESBURY, MA

DINISCO DESIGN
architects + planners
99 Chauncy Street, Suite 901
Boston, MA 02111
(617) 426-2858

DGT Associates
Surveying & Engineers
1071 Worcester Road
Framingham, MA 01701
(508) 879-0030

Brown Sardina, Inc.
Landscape Architects
24 Roland Street
Boston, MA 02129
(617) 482-4703

Foley Buhl Roberts & Assoc., Inc.
Structural Engineers
2150 Washington Street
Newton, MA 02462
(617) 527-9600

Crabtree McGrath Assoc., Inc.
Food Service Consultants
161 West Main Street
Georgetown, MA 01833
(978) 352-8500

VAV International, Inc.
Mechanical Engineers
400 West Cummings Park S. 4700
Woburn, MA 01801
(781) 935-7228

Thompson Engineering Company, Inc.
Electrical Engineers
89 Newbury Street, Suite 103
Danvers, MA 01923
(617) 866-9066

EdVance Technology Design, Inc.
Technology Consultants
300 Brickstone Square, Suite 201
Andover, MA 01880
(978) 256-9900

KEY PLAN

NORTH ARROW

STAMP

Date: 21 August 2020

Drawn By: **JM, TD, EG**

Scale: N.T.S.

Revisions

Number	Date	Description

90% COST ESTIMATE SET

Site Electrical Details

10.1.04

© 2020 DiNisco Design

I:\18011 - Amesbury Elementary School\10.1.04.dwg / 8/14/2020 3:47:52 PM

AMESBURY ELEMENTARY SCHOOL

AMESBURY, MA

DINISCO DESIGN
architects + planners
99 Chauncy Street, Suite 901
Boston, MA 02111
(617) 426-2858

NOTES

1 – WALL WITH TRANSOM GLASS ABOVE. ROUTE CONDUIT IN WALL TO STRUCTURAL COLUMN. COORDINATE WITH ARCHITECTURAL PLANS.

2 – DEVICE TO BE INSTALLED ON FACE OF STOREFRONT CURTAIN WALL STRUCTURAL SYSTEM. WIRING TO BE INSTALLED CONCEALED WITHIN STRUCTURAL MEMBERS. COORDINATE WITH ARCHITECTURAL DETAILS.

3 – DISPLAY CASE LIGHTING – FOR EACH 3'-6"+/- DISPLAY CASE, ELECTRICAL CONTRACTOR SHALL FURNISH AND INSTALL THREE 1'-0" S9-1 LIGHTING FIXTURES. TYPICAL FOR TEN DISPLAY CASES. ALL DISPLAY CASE LIGHTING FIXTURES SHALL BE CONNECTED TO PANEL LP1C #100, CONTROL LEG ZZ. PROVIDE ALL REQUIRED CONNECTORS AND ACCESSORIES. REFER TO ARCHITECTURAL DETAILS.

LIGHTING PLAN GENERAL NOTES

1 – REFER TO THE ARCHITECTURAL DETAIL DRAWINGS AND ELEVATIONS FOR EXACT LOCATION AND MOUNTING HEIGHT OF ALL ELECTRICAL EQUIPMENT INCLUDING ALL LIGHTING FIXTURES AND SWITCHES IN ALL ROOMS.

2 – ALL HOMERUN WIRING CONDUCTORS OPERATING AT 120 VOLTS EXTENDING IN EXCESS OF 100 FEET, OR AT 277 VOLTS EXTENDING IN EXCESS OF 200 FEET, FROM PANEL TO THE LAST OUTLET OR FIXTURE TAP SHALL BE #10 A.W.G. COPPER THROUGHOUT, UNLESS OTHERWISE NOTED.

3 – ALL EXIT SIGNS SHALL BE CONNECTED TO A DEDICATED 20A-1P CIRCUIT IN NEAREST 277/480V LIFE SAFETY EMERGENCY PANEL WITH 2#12 & 1#12 MC CABLE.

4 – ALL CORRIDOR AND STAIR LIGHTING SHALL BE CONTROLLED BY BUILDING LIGHTING CONTROL SYSTEM. LIGHTING IN GYM, LIBRARY, AND CAFETERIA WILL ALSO BE CONTROLLED BY BUILDING LIGHTING CONTROL SYSTEM. REFER TO LIGHTING CONTROL DETAILS 10.3.07.

5 – ALL 120V LIGHTING SHALL BE CONNECTED TO A SPARE 20A-1P CIRCUIT BREAKER IN NEAREST 120V RECEPTACLE PANEL UNLESS OTHERWISE NOTED.

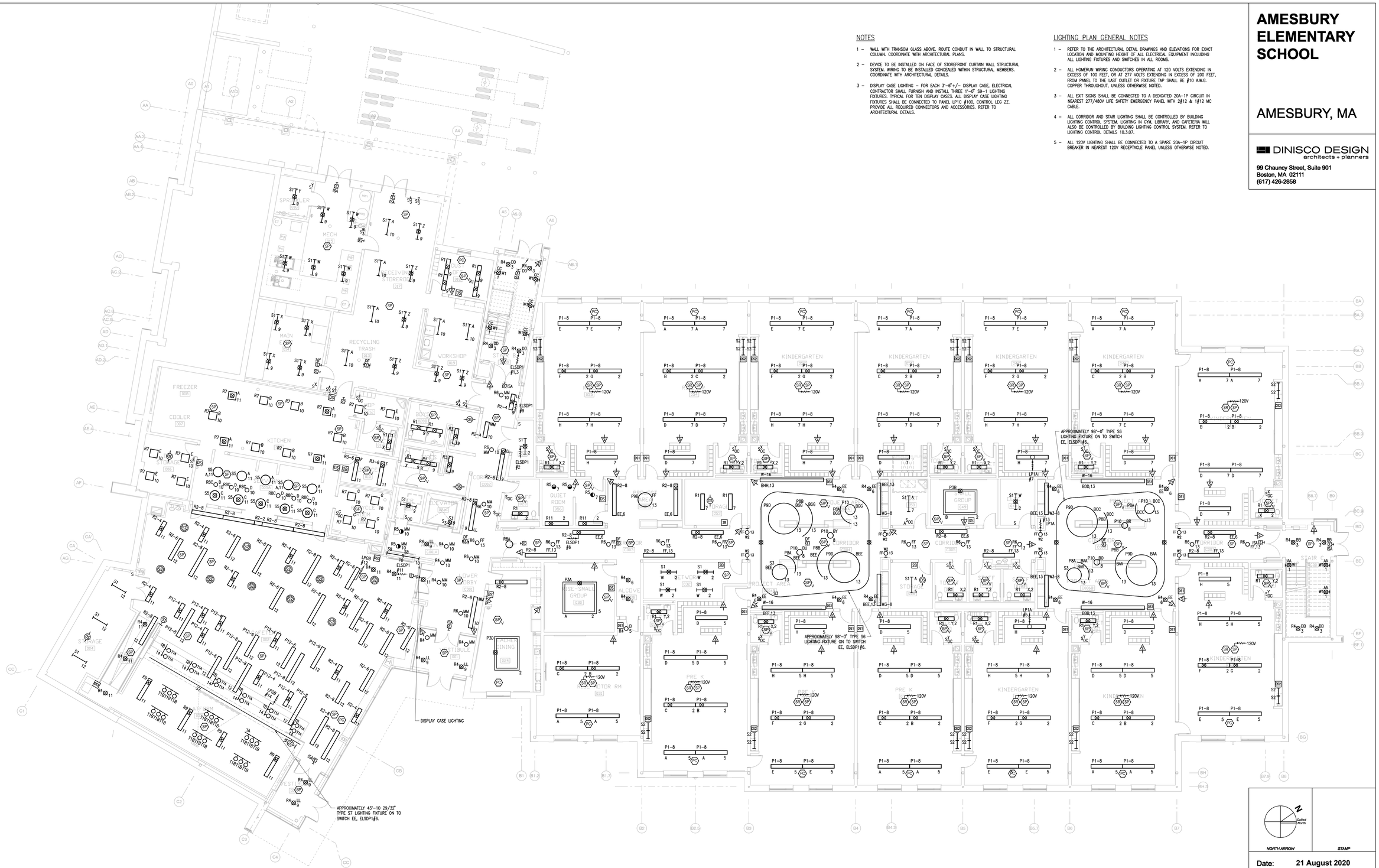

NORTH ARROW

STAMP

Date: 21 August 2020

Drawn By: JM, TD, EG

Scale: 0 8 16

Revisions

Number	Date	Description

90% COST ESTIMATE SET

Ground Floor Lighting Plan

10.2.01

© 2020 DiNisco Design - [36" x 48"] - 3/22/20

POWER PLAN GENERAL NOTES

1 – REFER TO THE ARCHITECTURAL DETAIL DRAWINGS AND ELEVATIONS FOR EXACT LOCATION AND MOUNTING HEIGHT OF ALL ELECTRICAL EQUIPMENT INCLUDING ALL SWITCHES, FIRE ALARM, RECEPTACLES, AND V/D OUTLETS IN ALL ROOMS.

2 – ALL HOMERUN WIRING CONDUCTORS OPERATING AT 120 VOLTS EXTENDING IN EXCESS OF 100 FEET, OR AT 277 VOLTS EXTENDING IN EXCESS OF 200 FEET, FROM PANEL TO THE LAST OUTLET OR FIXTURE TAP SHALL BE #10 A.W.G. COPPER THROUGHOUT, UNLESS OTHERWISE NOTED.

3 – THE ELECTRICAL SUBCONTRACTOR SHALL COORDINATE THE EXACT LOCATION OF ALL ELECTRICAL EQUIPMENT INCLUDING LIGHTING FIXTURES AND RECEPTACLES WITH THE HVAC SUBCONTRACTOR SO THAT NO ELECTRICAL EQUIPMENT SHALL INTERFERE WITH THE HVAC EQUIPMENT AND ELECTRICAL EQUIPMENT WILL BE ACCESSIBLE AFTER THE HVAC EQUIPMENT HAS BEEN INSTALLED.

4 – ALL COMMUNICATION AND ALL LOW VOLTAGE WIRING INSTALLED IN AREAS WITH EXPOSED STRUCTURAL CEILINGS SHALL BE INSTALLED IN EMT CONDUIT. ELECTRICAL CONTRACTOR TO FURNISH AND INSTALL THIS REQUIRED EMT CONDUIT. REFER TO ARCHITECTURAL REFLECTED CEILING PLANS FOR AREAS WITH EXPOSED STRUCTURAL CEILINGS.

5 – COORDINATE EXACT LOCATION OF FLOOR BOXES WITH ARCHITECT.

6 – ALL COUNTER OR STANDARD HEIGHT RECEPTACLES INSTALLED WITHIN 6'-0" OF SINK SHALL BE OF THE GFCI TYPE.

7 – ELECTRICAL CONTRACTOR SHALL FURNISH AND INSTALL ALL REQUIRED 4" CONDUIT SLEEVES FOR ALL COMMUNICATION SYSTEMS INSTALLATION. SLEEVES TO BE INSTALLED BETWEEN ALL CLASSROOMS AND ROOM/OFFICES AND BETWEEN ALL CLASSROOMS/OFFICES/ROOMS AND CORRIDORS.

8 – A NUMBER OF HVAC DDC OR BMS CONTROL PANELS FOR MAJOR HVAC EQUIPMENT (AHUS, CHILLER, ETC.) WILL BE INSTALLED AT VARIOUS LOCATIONS WITHIN THE BUILDING BY THE AUTOMATIC CONTROL SUBCONTRACTOR, PROVIDE A 120-VOLT CIRCUIT TO EACH OF THE DDC OR BMS PANELS. CONNECT TO A 20A-1P SPARE CIRCUIT BREAKER IN THE NEAREST STANDBY POWER PANEL. PROVIDE ONE CAT 6A DATA OUTLET TO PANEL. DATA CABLE TO NEAREST IDF CLOSET.

9 – JUNCTION BOX FOR HVAC VAV BOX POWER. EACH JUNCTION BOX SERVES 3 TO 5 VAV BOXES. LOW VOLTAGE TRANSFORMER AND ALL LOW VOLTAGE WIRING FURNISHED, INSTALLED AND WIRED BY ATC SUBCONTRACTOR. ELECTRICAL SUBCONTRACTOR TO FURNISH AND INSTALL JUNCTION BOX, CONDUIT, AND 120V WIRING TO LOW VOLTAGE TRANSFORMERS. COORDINATE WITH HVAC. REFER TO HVAC DRAWINGS. TYPICAL.

10 – AUTOMATIC TOILET TRANSFORMER FURNISHED BY PLUMBING, INSTALLED AND WIRED BY ELECTRICAL. ELECTRICAL CONTRACTOR TO PROVIDE 120-VOLT CIRCUIT FROM NEAREST TOILET RECEPTACLE CIRCUIT. REFER TO WIRING DIAGRAMS, DWG 10.3.12. TYPICAL FOR ALL.

11 – HVP OUTLET AND ASSOCIATED RECEPTACLE TO BE LOCATED AT WHITE BOARD. EXACT LOCATION AND MOUNTING HEIGHT BY ARCHITECT.

12 – IN OFFICES, OUTLET BOXES SHALL BE STAGGERED SO THAT OUTLET BOXES FROM TWO ROOMS ARE NOT INSTALLED IN THE SAME WALL CAVITY AND SHALL BE A MINIMUM OF 2'-0" ON CENTER.

13 – ELECTRICAL CONTRACTOR TO FIRE PROOF PENETRATIONS THROUGH FIRE RATED ASSEMBLIES. REFER TO ARCHITECTURAL PLANS FOR LOCATIONS OF ALL FIRE RATED WALLS AND CEILINGS. REFER TO GENERAL NOTE ON DWG. 10.0.01.

14 – ELECTRICAL CONTRACTOR TO FURNISH AND INSTALL EXPANSION FITTINGS FOR ALL CONDUITS PASSING THROUGH EXPANSION JOINTS. REFER TO ARCHITECTURAL DRAWINGS FOR EXPANSION JOINTS.

AMESBURY ELEMENTARY SCHOOL

AMESBURY, MA

DINISCO DESIGN
architects + planners
99 Chauncy Street, Suite 901
Boston, MA 02111
(617) 426-2858

GENERATOR DOCKING STATION.

REFER TO ENLARGED KITCHEN PLAN, DWG 10.2.14

LOCATION FOR PV CONDUITS.

CONNECT TO HAND DRYER. TYPICAL.

CONNECT TO EWC

FLATSCREEN DISPLAY.

PROJECTION SCREEN AND PLATFORM MOTORIZED CURTAIN CONTROL KEY SWITCHES. COORDINATE EXACT LOCATION WITH ARCHITECT.

CAFETERIA SHADE CONTROLS. COORDINATE EXACT LOCATION WITH ARCHITECT.

SOUND RACK

REAR PROJECTOR.

REFER TO SHADE WIRING DIAGRAM DWG 10.3.12

REFER TO DATA ROOM LAYOUT DWG 10.3.6

CORD REEL

COPIER.

REFRIG.

COFFEE.

MICRO.

TREADMILL.

BIKE.

CHARGING CART.

PRINTER.

CONNECT TO EWC.

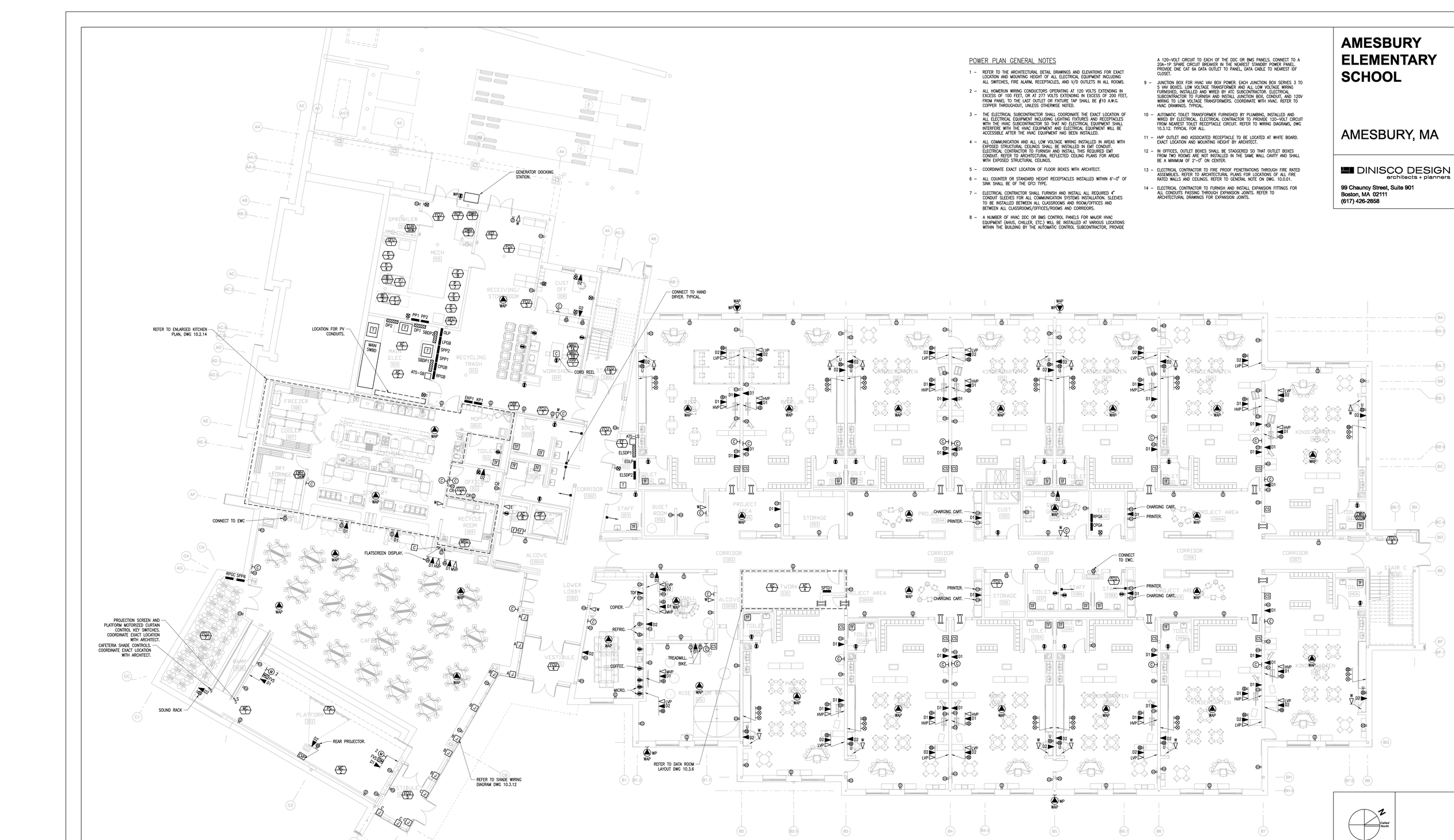

NORTH ARROW

STAMP

Date: 21 August 2020

Drawn By: JM, TD, EG

Scale: 0 8 16

Revisions

Number	Date	Description

90% COST ESTIMATE SET

Ground Floor Power Plan

10.2.02

© 2020 DiNisco Design - [36" x 48"] - 3/22/20

I:\1821 - Amesbury Elementary School\10.2.02.dwg, 8/4/2020 1:42:21 PM

AMESBURY ELEMENTARY SCHOOL

AMESBURY, MA

DINISCO DESIGN
architects + planners
99 Chauncy Street, Suite 901
Boston, MA 02111
(617) 426-2858

NOTES

1 – WALL WITH TRANSOM GLASS ABOVE. ROUTE CONDUIT IN WALL TO STRUCTURAL COLUMN. COORDINATE WITH ARCHITECTURAL PLANS.

2 – DEVICE TO BE INSTALLED ON FACE OF STOREFRONT CURTAIN WALL STRUCTURAL SYSTEM. WIRING TO BE INSTALLED CONCEALED WITHIN STRUCTURAL MEMBERS. COORDINATE WITH ARCHITECTURAL DETAILS.

3 – DISPLAY CASE LIGHTING – FOR EACH 3'-6" +/- DISPLAY CASE, ELECTRICAL CONTRACTOR SHALL FURNISH AND INSTALL THREE 1'-0" S9-1 LIGHTING FIXTURES. TYPICAL FOR TEN DISPLAY CASES. ALL DISPLAY CASE LIGHTING FIXTURES SHALL BE CONNECTED TO PANEL LP1C #100, CONTROL LEG ZZ. PROVIDE ALL REQUIRED CONNECTORS AND ACCESSORIES. REFER TO ARCHITECTURAL DETAILS.

LIGHTING PLAN GENERAL NOTES

1 – REFER TO THE ARCHITECTURAL DETAIL DRAWINGS AND ELEVATIONS FOR EXACT LOCATION AND MOUNTING HEIGHT OF ALL ELECTRICAL EQUIPMENT INCLUDING ALL LIGHTING FIXTURES AND SWITCHES IN ALL ROOMS.

2 – ALL HOMERUN WIRING CONDUCTORS OPERATING AT 120 VOLTS EXTENDING IN EXCESS OF 100 FEET, OR AT 277 VOLTS EXTENDING IN EXCESS OF 200 FEET, FROM PANEL TO THE LAST OUTLET OR FIXTURE TAP SHALL BE #10 A.W.G. COPPER THROUGHOUT, UNLESS OTHERWISE NOTED.

3 – ALL EXIT SIGNS SHALL BE CONNECTED TO A DEDICATED 20A-1P CIRCUIT IN NEAREST 277/480V LIFE SAFETY EMERGENCY PANEL WITH 2#12 & 1#12 MC CABLE.

4 – ALL CORRIDOR AND STAIR LIGHTING SHALL BE CONTROLLED BY BUILDING LIGHTING CONTROL SYSTEM. LIGHTING IN GYM, LIBRARY, AND CAFETERIA WILL ALSO BE CONTROLLED BY BUILDING LIGHTING CONTROL SYSTEM. REFER TO LIGHTING CONTROL DETAILS 10.3.07.

5 – ALL 120V LIGHTING SHALL BE CONNECTED TO A SPARE 20A-1P CIRCUIT BREAKER IN NEAREST 120V RECEPTACLE PANEL UNLESS OTHERWISE NOTED.



GYMNASIUM LIGHTING PLAN NOTES

1 – IN GYMNASIUM, ELECTRICAL SUBCONTRACTOR SHALL FURNISH AND INSTALL WIRE GUARDS ON ALL OF THE FOLLOWING DEVICES: FIRE ALARM SYSTEM DEVICES, OCCUPANCY SENSORS, CLOCKS, SECURITY SYSTEM DEVICES, PHOTOCELLS, LIGHTING CONTROL STATIONS, WIRELESS ACCESS POINTS, AND SECURITY CAMERAS.

2 – ALL FIRE ALARM SYSTEM DEVICES, LIGHTING CONTROL STATIONS, RECEPTACLES, TEL/DATA OUTLETS, ETC SHALL BE LOCATED OUTSIDE OF THE AREAS TO BE PROVIDED WITH WALL PADS TO THE EXTENT POSSIBLE. REFER TO ARCHITECTURAL GYMNASIUM INTERIOR ELEVATIONS DRAWINGS FOR THE EXTENT OF THE WALL PADS. COORDINATE WITH ARCHITECT.

NORTH ARROW | STAMP

Date: 21 August 2020

Drawn By: JM, TD, EG

Scale: 0 8 16

Revisions

Number	Date	Description

90% COST ESTIMATE SET

First Floor Lighting Plan

10.2.03

© 2020 DiNisco Design - [36" x 48"] - 3/22/20

AMESBURY ELEMENTARY SCHOOL

AMESBURY, MA

DINISCO DESIGN
architects + planners
99 Chauncy Street, Suite 901
Boston, MA 02111
(617) 426-2858

POWER PLAN GENERAL NOTES

1 – REFER TO THE ARCHITECTURAL DETAIL DRAWINGS AND ELEVATIONS FOR EXACT LOCATION AND MOUNTING HEIGHT OF ALL ELECTRICAL EQUIPMENT INCLUDING ALL SWITCHES, FIRE ALARM, RECEPTACLES, AND V/D OUTLETS IN ALL ROOMS.

2 – ALL HOMERUN WIRING CONDUCTORS OPERATING AT 120 VOLTS EXTENDING IN EXCESS OF 100 FEET, OR AT 277 VOLTS EXTENDING IN EXCESS OF 200 FEET, FROM PANEL TO THE LAST OUTLET OR FIXTURE TAP SHALL BE #10 A.W.G. COPPER THROUGHOUT, UNLESS OTHERWISE NOTED.

3 – THE ELECTRICAL SUBCONTRACTOR SHALL COORDINATE THE EXACT LOCATION OF ALL ELECTRICAL EQUIPMENT INCLUDING LIGHTING FIXTURES AND RECEPTACLES WITH THE HVAC SUBCONTRACTOR SO THAT NO ELECTRICAL EQUIPMENT SHALL INTERFERE WITH THE HVAC EQUIPMENT AND ELECTRICAL EQUIPMENT WILL BE ACCESSIBLE AFTER THE HVAC EQUIPMENT HAS BEEN INSTALLED.

4 – ALL COMMUNICATION AND ALL LOW VOLTAGE WIRING INSTALLED IN AREAS WITH EXPOSED STRUCTURAL CEILINGS SHALL BE INSTALLED IN EMT CONDUIT. ELECTRICAL CONTRACTOR TO FURNISH AND INSTALL THIS REQUIRED EMT CONDUIT. REFER TO ARCHITECTURAL REFLECTED CEILING PLANS FOR AREAS WITH EXPOSED STRUCTURAL CEILINGS.

5 – COORDINATE EXACT LOCATION OF FLOOR BOXES WITH ARCHITECT.

6 – ALL COUNTER OR STANDARD HEIGHT RECEPTACLES INSTALLED WITHIN 6'-0" OF SINK SHALL BE OF THE GFCI TYPE.

7 – ELECTRICAL CONTRACTOR SHALL FURNISH AND INSTALL ALL REQUIRED 4" CONDUIT SLEEVES FOR ALL COMMUNICATION SYSTEMS INSTALLATION. SLEEVES TO BE INSTALLED BETWEEN ALL CLASSROOMS AND ROOM/OFFICES AND BETWEEN ALL CLASSROOMS/OFFICES/ROOMS AND CORRIDORS.

8 – A NUMBER OF HVAC DDC OR BMS CONTROL PANELS FOR MAJOR HVAC EQUIPMENT (AHUS, CHILLER, ETC.) WILL BE INSTALLED AT VARIOUS LOCATIONS WITHIN THE BUILDING BY THE AUTOMATIC CONTROL SUBCONTRACTOR, PROVIDE A 120-VOLT CIRCUIT TO EACH OF THE DDC OR BMS PANELS. CONNECT TO A 20A-1P SPARE CIRCUIT BREAKER IN THE NEAREST STANDBY POWER PANEL. PROVIDE ONE CAT 6A DATA OUTLET TO PANEL DATA CABLE TO NEAREST IDF CLOSET.

9 – JUNCTION BOX FOR HVAC VAV BOX POWER. EACH JUNCTION BOX SERVES 3 TO 5 VAV BOXES. LOW VOLTAGE TRANSFORMER AND ALL LOW VOLTAGE WIRING FURNISHED, INSTALLED AND WIRED BY ATC SUBCONTRACTOR. ELECTRICAL SUBCONTRACTOR TO FURNISH AND INSTALL JUNCTION BOX, CONDUIT, AND 120V WIRING TO LOW VOLTAGE TRANSFORMERS. COORDINATE WITH HVAC. REFER TO HVAC DRAWINGS. TYPICAL.

10 – AUTOMATIC TOILET TRANSFORMER FURNISHED BY PLUMBING, INSTALLED AND WIRED BY ELECTRICAL. ELECTRICAL CONTRACTOR TO PROVIDE 120-VOLT CIRCUIT FROM NEAREST TOILET RECEPTACLE CIRCUIT. REFER TO WIRING DIAGRAMS, DWG 10.3.12. TYPICAL FOR ALL.

11 – HVP OUTLET AND ASSOCIATED RECEPTACLE TO BE LOCATED AT WHITE BOARD. EXACT LOCATION AND MOUNTING HEIGHT BY ARCHITECT.

12 – IN OFFICES, OUTLET BOXES SHALL BE STAGGERED SO THAT OUTLET BOXES FROM TWO ROOMS ARE NOT INSTALLED IN THE SAME WALL CAVITY AND SHALL BE A MINIMUM OF 2'-0" ON CENTER.

13 – ELECTRICAL CONTRACTOR TO FIRE PROOF PENETRATIONS THROUGH FIRE RATED ASSEMBLIES. REFER TO ARCHITECTURAL PLANS FOR LOCATIONS OF ALL FIRE RATED WALLS AND CEILINGS. REFER TO GENERAL NOTE ON DWG. 10.0.01.

14 – ELECTRICAL CONTRACTOR TO FURNISH AND INSTALL EXPANSION FITTINGS FOR ALL CONDUITS PASSING THROUGH EXPANSION JOINTS. REFER TO ARCHITECTURAL DRAWINGS FOR EXPANSION JOINTS.

GYMNASIUM POWER PLAN NOTES

1 – IN GYMNASIUM, ELECTRICAL SUBCONTRACTOR SHALL FURNISH AND INSTALL WIRE GUARDS ON ALL OF THE FOLLOWING DEVICES: FIRE ALARM SYSTEM DEVICES, OCCUPANCY SENSORS, CLOCKS, SECURITY SYSTEM DEVICES, PHOTOCELLS, LIGHTING CONTROL STATIONS, WIRELESS ACCESS POINTS, AND SECURITY CAMERAS.

2 – ALL FIRE ALARM SYSTEM DEVICES, LIGHTING CONTROL STATIONS, RECEPTACLES, TEL/DATA OUTLETS, ETC. SHALL BE LOCATED OUTSIDE OF THE AREAS TO BE PROVIDED WITH WALL PADS TO THE EXTENT POSSIBLE. REFER TO ARCHITECTURAL GYMNASIUM INTERIOR ELEVATIONS DRAWINGS FOR THE EXTENT OF THE WALL PADS. COORDINATE WITH ARCHITECT.

3 – BASKETBALL MOTORIZED BACKBOARDS, MOTORS, CONTROLS, LIMIT SWITCHES AND KEY OPERATED CONTROL SWITCHES FURNISHED BY THE EQUIPMENT SUPPLIER. DISCONNECT SWITCHES, POWER WIRING, KEY SWITCH WIRING INCLUDING CONNECTIONS TO THE LIMIT SWITCHES SHALL BE FURNISHED AND INSTALLED BY THE ELECTRICAL SUBCONTRACTOR.

4 – FURNISH AND INSTALL ONE DAKTRONICS #BB-2101 SCOREBOARD WITH WIRELESS 5000 ALLSPORT CONTROL CONSOLE WITH BATTERY PACK OR APPROVED EQUAL. FURNISH AND INSTALL ONE SET OF DAKTRONICS BB-2115 SHOT/TIME CLOCKS WITH MOUNTING BRACKETS AND WIRELESS OPTION OR APPROVED EQUAL. REFER TO SPECIFICATIONS.

5 – ALL CONDUITS AND WIRING FOR ELECTRICAL EQUIPMENT ON EXTERIOR WALLS OF GYMNASIUM SHALL BE COORDINATED WITH THE STRUCTURAL STEEL INCLUDING CORING THROUGH STEEL FOR CONDUITS. COORDINATE WITH ARCHITECT.

NORTH ARROW (Called North) | STAMP

Date: 21 August 2020

Drawn By: JM, TD, EG

Scale: 0 8 16

Revisions

Number	Date	Description

90% COST ESTIMATE SET

First Floor Power Plan

10.2.04

© 2020 DiNisco Design - [36" x 48"] - 3/22/20

I:\1911 - Amesbury Elementary 2020\02 CD Set.dwg, 8/14/2020 2:48:25 PM

AMESBURY ELEMENTARY SCHOOL

AMESBURY, MA

DINISCO DESIGN
architects + planners
99 Chauncy Street, Suite 901
Boston, MA 02111
(617) 426-2858

NOTES

1 – WALL WITH TRANSOM GLASS ABOVE. ROUTE CONDUIT IN WALL TO STRUCTURAL COLUMN. COORDINATE WITH ARCHITECTURAL PLANS.

2 – DEVICE TO BE INSTALLED ON FACE OF STOREFRONT CURTAIN WALL STRUCTURAL SYSTEM. WIRING TO BE INSTALLED CONCEALED WITHIN STRUCTURAL MEMBERS. COORDINATE WITH ARCHITECTURAL DETAILS.

3 – DISPLAY CASE LIGHTING – FOR EACH 3'-6"+/– DISPLAY CASE, ELECTRICAL CONTRACTOR SHALL FURNISH AND INSTALL THREE 1'-0" S9-1 LIGHTING FIXTURES. TYPICAL FOR TEN DISPLAY CASES. ALL DISPLAY CASE LIGHTING FIXTURES SHALL BE CONNECTED TO PANEL LP1C #100, CONTROL LEG ZZ. PROVIDE ALL REQUIRED CONNECTORS AND ACCESSORIES. REFER TO ARCHITECTURAL DETAILS.

LIGHTING PLAN GENERAL NOTES

1 – REFER TO THE ARCHITECTURAL DETAIL DRAWINGS AND ELEVATIONS FOR EXACT LOCATION AND MOUNTING HEIGHT OF ALL ELECTRICAL EQUIPMENT INCLUDING ALL LIGHTING FIXTURES AND SWITCHES IN ALL ROOMS.

2 – ALL HOMERUN WIRING CONDUCTORS OPERATING AT 120 VOLTS EXTENDING IN EXCESS OF 100 FEET, OR AT 277 VOLTS EXTENDING IN EXCESS OF 200 FEET, FROM PANEL TO THE LAST OUTLET OR FIXTURE TAP SHALL BE #10 A.W.G. COPPER THROUGHOUT, UNLESS OTHERWISE NOTED.

3 – ALL EXIT SIGNS SHALL BE CONNECTED TO A DEDICATED 20A-1P CIRCUIT IN NEAREST 277/480V LIFE SAFETY EMERGENCY PANEL WITH 2#12 & 1#12 MC CABLE.

4 – ALL CORRIDOR AND STAIR LIGHTING SHALL BE CONTROLLED BY BUILDING LIGHTING CONTROL SYSTEM. LIGHTING IN GYM, LIBRARY, AND CAFETERIA WILL ALSO BE CONTROLLED BY BUILDING LIGHTING CONTROL SYSTEM. REFER TO LIGHTING CONTROL DETAILS 10.3.07.

5 – ALL 120V LIGHTING SHALL BE CONNECTED TO A SPARE 20A-1P CIRCUIT BREAKER IN NEAREST 120V RECEPTACLE PANEL UNLESS OTHERWISE NOTED.

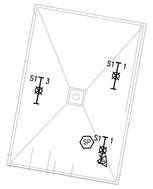

2 ROOF ACCESS STAIR LIGHTING PLAN
SCALE: 1/8" = 1'-0"



NORTH ARROW

STAMP

Date: 21 August 2020

Drawn By: JM, TD, EG

Scale: 0 8 16

Revisions

Number	Date	Description

90% COST ESTIMATE SET

Second Floor Lighting Plan

10.2.05

© 2020 DiNisco Design - [36" x 48"] - 3/22/20

POWER PLAN GENERAL NOTES

1 – REFER TO THE ARCHITECTURAL DETAIL DRAWINGS AND ELEVATIONS FOR EXACT LOCATION AND MOUNTING HEIGHT OF ALL ELECTRICAL EQUIPMENT INCLUDING ALL SWITCHES, FIRE ALARM, RECEPTACLES, AND V/D OUTLETS IN ALL ROOMS.

2 – ALL HOMERUN WIRING CONDUCTORS OPERATING AT 120 VOLTS EXTENDING IN EXCESS OF 100 FEET, OR AT 277 VOLTS EXTENDING IN EXCESS OF 200 FEET, FROM PANEL TO THE LAST OUTLET OR FIXTURE TAP SHALL BE #10 A.W.G. COPPER THROUGHOUT, UNLESS OTHERWISE NOTED.

3 – THE ELECTRICAL SUBCONTRACTOR SHALL COORDINATE THE EXACT LOCATION OF ALL ELECTRICAL EQUIPMENT INCLUDING LIGHTING FIXTURES AND RECEPTACLES WITH THE HVAC SUBCONTRACTOR SO THAT NO ELECTRICAL EQUIPMENT SHALL INTERFERE WITH THE HVAC EQUIPMENT AND ELECTRICAL EQUIPMENT WILL BE ACCESSIBLE AFTER THE HVAC EQUIPMENT HAS BEEN INSTALLED.

4 – ALL COMMUNICATION AND ALL LOW VOLTAGE WIRING INSTALLED IN AREAS WITH EXPOSED STRUCTURAL CEILINGS SHALL BE INSTALLED IN EMT CONDUIT. ELECTRICAL CONTRACTOR TO FURNISH AND INSTALL THIS REQUIRED EMT CONDUIT. REFER TO ARCHITECTURAL REFLECTED CEILING PLANS FOR AREAS WITH EXPOSED STRUCTURAL CEILINGS.

5 – COORDINATE EXACT LOCATION OF FLOOR BOXES WITH ARCHITECT.

6 – ALL COUNTER OR STANDARD HEIGHT RECEPTACLES INSTALLED WITHIN 6'-0" OF SINK SHALL BE OF THE GFCI TYPE.

7 – ELECTRICAL CONTRACTOR SHALL FURNISH AND INSTALL ALL REQUIRED 4" CONDUIT SLEEVES FOR ALL COMMUNICATION SYSTEMS INSTALLATION. SLEEVES TO BE INSTALLED BETWEEN ALL CLASSROOMS AND ROOM/OFFICES AND BETWEEN ALL CLASSROOMS/OFFICES/ROOMS AND CORRIDORS.

8 – A NUMBER OF HVAC DDC OR BMS CONTROL PANELS FOR MAJOR HVAC EQUIPMENT (AHUS, CHILLER, ETC.) WILL BE INSTALLED AT VARIOUS LOCATIONS WITHIN THE BUILDING BY THE AUTOMATIC CONTROL SUBCONTRACTOR, PROVIDE A 120-VOLT CIRCUIT TO EACH OF THE DDC OR BMS PANELS. CONNECT TO A 20A-1P SPARE CIRCUIT BREAKER IN THE NEAREST STANDBY POWER PANEL. PROVIDE ONE CAT 6A DATA OUTLET TO PANEL DATA CABLE TO NEAREST IDF CLOSET.

9 – JUNCTION BOX FOR HVAC VAV BOX POWER. EACH JUNCTION BOX SERVES 3 TO 5 VAV BOXES. LOW VOLTAGE TRANSFORMER AND ALL LOW VOLTAGE WIRING FURNISHED, INSTALLED AND WIRED BY ATC SUBCONTRACTOR. ELECTRICAL SUBCONTRACTOR TO FURNISH AND INSTALL JUNCTION BOX, CONDUIT, AND 120V WIRING TO LOW VOLTAGE TRANSFORMERS. COORDINATE WITH HVAC. REFER TO HVAC DRAWINGS. TYPICAL.

10 – AUTOMATIC TOILET TRANSFORMER FURNISHED BY PLUMBING, INSTALLED AND WIRED BY ELECTRICAL. ELECTRICAL CONTRACTOR TO PROVIDE 120-VOLT CIRCUIT FROM NEAREST TOILET RECEPTACLE CIRCUIT. REFER TO WIRING DIAGRAMS, DWG 10.3.12. TYPICAL FOR ALL.

11 – HVP OUTLET AND ASSOCIATED RECEPTACLE TO BE LOCATED AT WHITE BOARD. EXACT LOCATION AND MOUNTING HEIGHT BY ARCHITECT.

12 – IN OFFICES, OUTLET BOXES SHALL BE STAGGERED SO THAT OUTLET BOXES FROM TWO ROOMS ARE NOT INSTALLED IN THE SAME WALL CAVITY AND SHALL BE A MINIMUM OF 2'-0" ON CENTER.

13 – ELECTRICAL CONTRACTOR TO FIRE PROOF PENETRATIONS THROUGH FIRE RATED ASSEMBLIES. REFER TO ARCHITECTURAL PLANS FOR LOCATIONS OF ALL FIRE RATED WALLS AND CEILINGS. REFER TO GENERAL NOTE ON DWG. 10.0.01.

14 – ELECTRICAL CONTRACTOR TO FURNISH AND INSTALL EXPANSION FITTINGS FOR ALL CONDUITS PASSING THROUGH EXPANSION JOINTS. REFER TO ARCHITECTURAL DRAWINGS FOR EXPANSION JOINTS.



2 **ROOF ACCESS STAIR POWER PLAN**
SCALE: 1/8" = 1'-0"

AMESBURY ELEMENTARY SCHOOL

AMESBURY, MA

DINISCO DESIGN
architects + planners
99 Chauncy Street, Suite 901
Boston, MA 02111
(617) 426-2858

NORTH ARROW (Called North) | STAMP

Date: 21 August 2020

Drawn By: JM, TD, EG

Scale: 0 8 16

Revisions

Number	Date	Description

90% COST ESTIMATE SET

Second Floor Power Plan

10.2.06

© 2020 DiNisco Design - [36" x 48"] - 3/22/20

I:\18011 - Amesbury Elementary School\12 CAD files\Arch\10.2.06.dwg, 8/14/2020 2:48:02 PM



FIRE ALARM PLAN NOTES

1 – REFER TO THE ARCHITECTURAL DETAIL DRAWINGS AND ELEVATIONS FOR EXACT LOCATION AND MOUNTING HEIGHT OF ALL ELECTRICAL EQUIPMENT INCLUDING ALL FIRE ALARM DEVICES.

2 – FIRE ALARM WIRING INSTALLED IN AREAS WITH EXPOSED STRUCTURAL CEILINGS SHALL BE INSTALLED IN EMT CONDUIT. ELECTRICAL CONTRACTOR TO FURNISH AND INSTALL THIS REQUIRED EMT CONDUIT. REFER TO ARCHITECTURAL REFLECTED CEILING PLANS FOR AREAS WITH EXPOSED STRUCTURAL CEILINGS.

3 – COORDINATE ALL DUCT SMOKE DETECTOR LOCATIONS WITH HVAC. COORDINATE REMOTE ALARM AND TEST SWITCH LOCATIONS WITH ARCHITECT AND FIRE DEPARTMENT.

4 – ZONE ADDRESSABLE MODULE TO CONTROL SUPPLY AND RETURN SMOKE AND FIRE DAMPERS. PROVIDE 20A/1P CIRCUIT FROM NEAREST 208V LIFE SAFETY EMERGENCY PANEL FOR DAMPER POWER. PROVIDE 24V CONTROL TRANSFORMER FOR POWER TO EACH DAMPER. REFER TO HVAC DRAWINGS FOR EXACT LOCATION AND QUANTITY. COORDINATE WITH HVAC.

5 – ZONE ADDRESSABLE MODULE TO SHUNT AV SOUND SYSTEMS.

6 – ZONE ADDRESSABLE MODULE TO RELEASE ALL SECURITY LOCKED DOORS DURING ALARM CONDITION. ELECTRICAL CONTRACTOR TO FURNISH AND INSTALL A 20A-1P CIRCUIT FROM NEAREST 208V LIFE SAFETY EMERGENCY POWER PANEL TO THE SECURITY LOCK POWER SUPPLY AT EACH DOOR.

AMESBURY ELEMENTARY SCHOOL

AMESBURY, MA

DINISCO DESIGN
architects + planners
99 Chauncy Street, Suite 901
Boston, MA 02111
(617) 426-2858

NORTH ARROW (Called North) | STAMP

Date: 21 August 2020

Drawn By: JM, TD, EG

Scale: 0 8 16

Revisions

Number	Date	Description

90% COST ESTIMATE SET

Ground Floor Fire Alarm Plan

10.2.07

© 2020 DiNisco Design - [36" x 48"] - 3/22/20

I:\18011 - Amesbury Elementary School\12-20 Dwg Fire\2020 Fire.rvt 8/4/2020 2:48:13 PM

AMESBURY ELEMENTARY SCHOOL

AMESBURY, MA

DINISCO DESIGN
architects + planners
99 Chauncy Street, Suite 901
Boston, MA 02111
(617) 426-2858

FIRE ALARM PLAN NOTES

1 – REFER TO THE ARCHITECTURAL DETAIL DRAWINGS AND ELEVATIONS FOR EXACT LOCATION AND MOUNTING HEIGHT OF ALL ELECTRICAL EQUIPMENT INCLUDING ALL FIRE ALARM DEVICES.

2 – FIRE ALARM WIRING INSTALLED IN AREAS WITH EXPOSED STRUCTURAL CEILINGS SHALL BE INSTALLED IN EMT CONDUIT. ELECTRICAL CONTRACTOR TO FURNISH AND INSTALL THIS REQUIRED EMT CONDUIT. REFER TO ARCHITECTURAL REFLECTED CEILING PLANS FOR AREAS WITH EXPOSED STRUCTURAL CEILINGS.

3 – COORDINATE ALL DUCT SMOKE DETECTOR LOCATIONS WITH HVAC. COORDINATE REMOTE ALARM AND TEST SWITCH LOCATIONS WITH ARCHITECT AND FIRE DEPARTMENT.

4 – ZONE ADDRESSABLE MODULE TO CONTROL SUPPLY AND RETURN SMOKE AND FIRE DAMPERS. PROVIDE 20A/1P CIRCUIT FROM NEAREST 208V LIFE SAFETY EMERGENCY PANEL FOR DAMPER POWER. PROVIDE 24V CONTROL TRANSFORMER FOR POWER TO EACH DAMPER. REFER TO HVAC DRAWINGS FOR EXACT LOCATION AND QUANTITY. COORDINATE WITH HVAC.

5 – ZONE ADDRESSABLE MODULE TO SHUNT AV SOUND SYSTEMS.

6 – ZONE ADDRESSABLE MODULE TO RELEASE ALL SECURITY LOCKED DOORS DURING ALARM CONDITION. ELECTRICAL CONTRACTOR TO FURNISH AND INSTALL A 20A-1P CIRCUIT FROM NEAREST 208V LIFE SAFETY EMERGENCY POWER PANEL TO THE SECURITY LOCK POWER SUPPLY AT EACH DOOR.

GYMNASIUM SOUND SYSTEM CONTROL MODULE. REFER TO NOTE #5.

EXTERIOR BEACON. COORDINATE EXACT LOCATION WITH ARCHITECT.

REFER TO NOTES #4. TYPICAL

REFER TO NOTES #6. TYPICAL

MONITOR MODULE FOR AED CABINET. COORDINATE EXACT LOCATION WITH ARCHITECT.

MUSIC ROOM SOUND SYSTEM CONTROL MODULE. REFER TO NOTE #5.

SNAC PANELS

GYMNASIUM FIRE ALARM PLAN NOTES

1 – IN GYMNASIUM, ELECTRICAL SUBCONTRACTOR SHALL FURNISH AND INSTALL WIRE GUARDS ON ALL OF THE FOLLOWING DEVICES: FIRE ALARM SYSTEM DEVICES, OCCUPANCY SENSORS, CLOCKS, SECURITY SYSTEM DEVICES, PHOTOCELLS, LIGHTING CONTROL STATIONS, WIRELESS ACCESS POINTS, AND SECURITY CAMERAS.

2 – ALL FIRE ALARM SYSTEM DEVICES, LIGHTING CONTROL STATIONS, RECEPTACLES, TEL/DATA OUTLETS, ETC SHALL BE LOCATED OUTSIDE OF THE AREAS TO BE PROVIDED WITH WALL PADS TO THE EXTENT POSSIBLE. REFER TO ARCHITECTURAL GYMNASIUM INTERIOR ELEVATIONS DRAWINGS FOR THE EXTENT OF THE WALL PADS. COORDINATE WITH ARCHITECT.

NORTH ARROW

STAMP

Date: 21 August 2020

Drawn By: JM, TD, EG

Scale: 0 8 16

Revisions

Number	Date	Description

90% COST ESTIMATE SET

First Floor Fire Alarm Plan

10.2.08

© 2020 DiNisco Design - [36" x 48"] - 3/22/20

I:\18021 - Amesbury Elementary School\10.2.08.dwg, 8/14/2020 7:46:19 PM

FIRE ALARM PLAN NOTES

1 – REFER TO THE ARCHITECTURAL DETAIL DRAWINGS AND ELEVATIONS FOR EXACT LOCATION AND MOUNTING HEIGHT OF ALL ELECTRICAL EQUIPMENT INCLUDING ALL FIRE ALARM DEVICES.

2 – FIRE ALARM WIRING INSTALLED IN AREAS WITH EXPOSED STRUCTURAL CEILINGS SHALL BE INSTALLED IN EMT CONDUIT. ELECTRICAL CONTRACTOR TO FURNISH AND INSTALL THIS REQUIRED EMT CONDUIT. REFER TO ARCHITECTURAL REFLECTED CEILING PLANS FOR AREAS WITH EXPOSED STRUCTURAL CEILINGS.

3 – COORDINATE ALL DUCT SMOKE DETECTOR LOCATIONS WITH HVAC. COORDINATE REMOTE ALARM AND TEST SWITCH LOCATIONS WITH ARCHITECT AND FIRE DEPARTMENT.

4 – ZONE ADDRESSABLE MODULE TO CONTROL SUPPLY AND RETURN SMOKE AND FIRE DAMPERS. PROVIDE 20A/1P CIRCUIT FROM NEAREST 208V LIFE SAFETY EMERGENCY PANEL FOR DAMPER POWER. PROVIDE 24V CONTROL TRANSFORMER FOR POWER TO EACH DAMPER. REFER TO HVAC DRAWINGS FOR EXACT LOCATION AND QUANTITY. COORDINATE WITH HVAC.

5 – ZONE ADDRESSABLE MODULE TO SHUNT AV SOUND SYSTEMS.

6 – ZONE ADDRESSABLE MODULE TO RELEASE ALL SECURITY LOCKED DOORS DURING ALARM CONDITION. ELECTRICAL CONTRACTOR TO FURNISH AND INSTALL A 20A-1P CIRCUIT FROM NEAREST 208V LIFE SAFETY EMERGENCY POWER PANEL TO THE SECURITY LOCK POWER SUPPLY AT EACH DOOR.

2 **ROOF ACCESS STAIR FIRE ALARM PLAN**
SCALE: 1/8" = 1'-0"

CONTROL MODULES FOR BI-DIRECTIONAL AMPLIFIER SYSTEM EQUIPMENT. REFER TO DETAIL, DRAWING 10.3.04.

REFER TO NOTES #4. TYPICAL

REFER TO NOTES #6. TYPICAL

MONITOR MODULE FOR AED CABINET. COORDINATE EXACT LOCATION WITH ARCHITECT.

ON WALL BELOW AT 6'-0" AFF

SNAC PANEL

AMESBURY ELEMENTARY SCHOOL

AMESBURY, MA

DINISCO DESIGN
architects + planners
99 Chauncy Street, Suite 901
Boston, MA 02111
(617) 426-2858

NORTH ARROW (Called North) | STAMP

Date: 21 August 2020

Drawn By: JM, TD, EG

Scale: 0 8 16

Revisions

Number	Date	Description

90% COST ESTIMATE SET

Second Floor Fire Alarm Plan

10.2.09

© 2020 DiNisco Design - [36" x 48"] - 3/22/20

C:\Users\jmorrison\Documents\19817 - Amesbury Elementary School_central_jmorrison.rvt 8/14/2020 9:46:27 PM

SECURITY PLAN NOTES

1 – THE SECURITY SYSTEM EQUIPMENT AND CABLING SHALL BE FURNISHED AND INSTALLED BY THE SECURITY SYSTEM CONTRACTOR DIVISION 281000.

2 – THE ELECTRICAL CONTRACTOR SHALL FURNISH AND INSTALL ALL REQUIRED CONDUIT AND BACKBOXES INCLUDING PULL LINES AND BUSHINGS AS REQUIRED FOR THE SECURITY EQUIPMENT. THE ELECTRICAL CONTRACTOR SHALL FURNISH AND INSTALL ALL REQUIRED 120-VOLT BRANCH CIRCUITS FOR SECURITY SYSTEM CONTROL PANELS, STANDBY POWER, AND POWER SUPPLIES.

3 – COORDINATE WORK IN VOICE/DATA MDF AND IDF CLOSETS WITH TECHNOLOGY CONTRACTOR.

4 – REFER TO THE ARCHITECTURAL DETAIL DRAWINGS AND ELEVATIONS FOR EXACT LOCATION AND MOUNTING HEIGHT OF ALL SECURITY EQUIPMENT.

5 – THE ELECTRICAL CONTRACTOR SHALL FURNISH AND INSTALL A DEDICATED 20/1P, 120V CIRCUIT FROM NEAREAST OPTIONAL STANDBY POWER PANEL TO EACH POWER SUPPLY FOR ALL EXTERIOR DOORS AND ALL DOORS WITH CARD READERS AND ELECTRIC TRIMS/STRIKES. POWER SUPPLY FURNISHED AND INSTALLED BY DIVISION 28 SUBCONTRACTOR. REFER TO DIVISION 28 AND DOOR HARDWARE SPECIFICATIONS.

DOOR OPERATOR PUSH BUTTON. REFER TO WIRING DIAGRAM, DWG 10.3.12. TYPICAL.

AMESBURY ELEMENTARY SCHOOL

AMESBURY, MA

DINISCO DESIGN
architects + planners
99 Chauncy Street, Suite 901
Boston, MA 02111
(617) 426-2858

NORTH ARROW (Called North) | STAMP

Date: 21 August 2020

Drawn By: JM, TD, EG

Scale: 0 8 16

Revisions

Number	Date	Description

90% COST ESTIMATE SET

Ground Floor Security Plan

10.2.10

© 2020 DiNisco Design - [36" x 48"] - 3/22/20

I:\2021\...\Amesbury Elementary School\10.2.10.dwg, 8/14/2020 2:48:43 PM

AMESBURY ELEMENTARY SCHOOL

AMESBURY, MA

DINISCO DESIGN
architects + planners
99 Chauncy Street, Suite 901
Boston, MA 02111
(617) 426-2858

SECURITY PLAN NOTES

1 – THE SECURITY SYSTEM EQUIPMENT AND CABLING SHALL BE FURNISHED AND INSTALLED BY THE SECURITY SYSTEM CONTRACTOR DIVISION 281000.

2 – THE ELECTRICAL CONTRACTOR SHALL FURNISH AND INSTALL ALL REQUIRED CONDUIT AND BACKBOXES INCLUDING PULL LINES AND BUSHINGS AS REQUIRED FOR THE SECURITY EQUIPMENT. THE ELECTRICAL CONTRACTOR SHALL FURNISH AND INSTALL ALL REQUIRED 120-VOLT BRANCH CIRCUITS FOR SECURITY SYSTEM CONTROL PANELS, STANDBY POWER, AND POWER SUPPLIES.

3 – COORDINATE WORK IN VOICE/DATA MDF AND IDF CLOSETS WITH TECHNOLOGY CONTRACTOR.

4 – REFER TO THE ARCHITECTURAL DETAIL DRAWINGS AND ELEVATIONS FOR EXACT LOCATION AND MOUNTING HEIGHT OF ALL SECURITY EQUIPMENT.

5 – THE ELECTRICAL CONTRACTOR SHALL FURNISH AND INSTALL A DEDICATED 20/1P, 120V CIRCUIT FROM NEAREAST OPTIONAL STANDBY POWER PANEL TO EACH POWER SUPPLY FOR ALL EXTERIOR DOORS AND ALL DOORS WITH CARD READERS AND ELECTRIC TRIMS/STRIKES. POWER SUPPLY FURNISHED AND INSTALLED BY DIVISION 28 SUBCONTRACTOR. REFER TO DIVISION 28 AND DOOR HARDWARE SPECIFICATIONS.



GYMNASIUM SECURITY PLAN NOTES

1 – IN GYMNASIUM, ELECTRICAL SUBCONTRACTOR SHALL FURNISH AND INSTALL WIRE GUARDS ON ALL OF THE FOLLOWING DEVICES: FIRE ALARM SYSTEM DEVICES, OCCUPANCY SENSORS, CLOCKS, SECURITY SYSTEM DEVICES, PHOTOCELLS, LIGHTING CONTROL STATIONS, WIRELESS ACCESS POINTS, AND SECURITY CAMERAS.

2 – ALL SECURITY DEVICES, FIRE ALARM SYSTEM DEVICES, LIGHTING CONTROL STATIONS, RECEPTACLES, TEL/DATA OUTLETS, ETC SHALL BE LOCATED OUTSIDE OF THE AREAS TO BE PROVIDE WITH WALL PADS TO THE EXTENT POSSIBLE. REFER TO ARCHITECTURAL GYMNASIUM INTERIOR ELEVATIONS DRAWINGS FOR THE EXTENT OF THE WALL PADS. COORDINATE WITH ARCHITECT.

NORTH ARROW (Called North) | STAMP

Date: 21 August 2020

Drawn By: JM, TD, EG

Scale: 0 8 16

Revisions

Number	Date	Description

90% COST ESTIMATE SET

First Floor Security Plan

10.2.11

© 2020 DiNisco Design - [36" x 48"] - 3/22/20

I:\18011 - Amesbury Elementary School\12-1 Final_8***

AMESBURY ELEMENTARY SCHOOL

AMESBURY, MA

DINISCO DESIGN
architects + planners
99 Chauncy Street, Suite 901
Boston, MA 02111
(617) 426-2858

SECURITY PLAN NOTES

1 – THE SECURITY SYSTEM EQUIPMENT AND CABLING SHALL BE FURNISHED AND INSTALLED BY THE SECURITY SYSTEM CONTRACTOR DIVISION 281000.

2 – THE ELECTRICAL CONTRACTOR SHALL FURNISH AND INSTALL ALL REQUIRED CONDUIT AND BACKBOXES INCLUDING PULL LINES AND BUSHINGS AS REQUIRED FOR THE SECURITY EQUIPMENT. THE ELECTRICAL CONTRACTOR SHALL FURNISH AND INSTALL ALL REQUIRED 120-VOLT BRANCH CIRCUITS FOR SECURITY SYSTEM CONTROL PANELS, STANDBY POWER, AND POWER SUPPLIES.

3 – COORDINATE WORK IN VOICE/DATA MDF AND IDF CLOSETS WITH TECHNOLOGY CONTRACTOR.

4 – REFER TO THE ARCHITECTURAL DETAIL DRAWINGS AND ELEVATIONS FOR EXACT LOCATION AND MOUNTING HEIGHT OF ALL SECURITY EQUIPMENT.

5 – THE ELECTRICAL CONTRACTOR SHALL FURNISH AND INSTALL A DEDICATED 20/1P, 120V CIRCUIT FROM NEAREAST OPTIONAL STANDBY POWER PANEL TO EACH POWER SUPPLY FOR ALL EXTERIOR DOORS AND ALL DOORS WITH CARD READERS AND ELECTRIC TRIMS/STRIKES. POWER SUPPLY FURNISHED AND INSTALLED BY DIVISION 28 SUBCONTRACTOR. REFER TO DIVISION 28 AND DOOR HARDWARE SPECIFICATIONS.



2 ROOF ACCESS STAIR SECURITY PLAN
SCALE: 1/8" = 1'-0"

NORTH ARROW

STAMP

Date: 21 August 2020

Drawn By: JM, TD, EG

Scale: 0 8 16

Revisions

Number	Date	Description

90% COST ESTIMATE SET

Second Floor Security Plan

10.2.12

© 2020 DiNisco Design - [36" x 48"] - 3/22/20

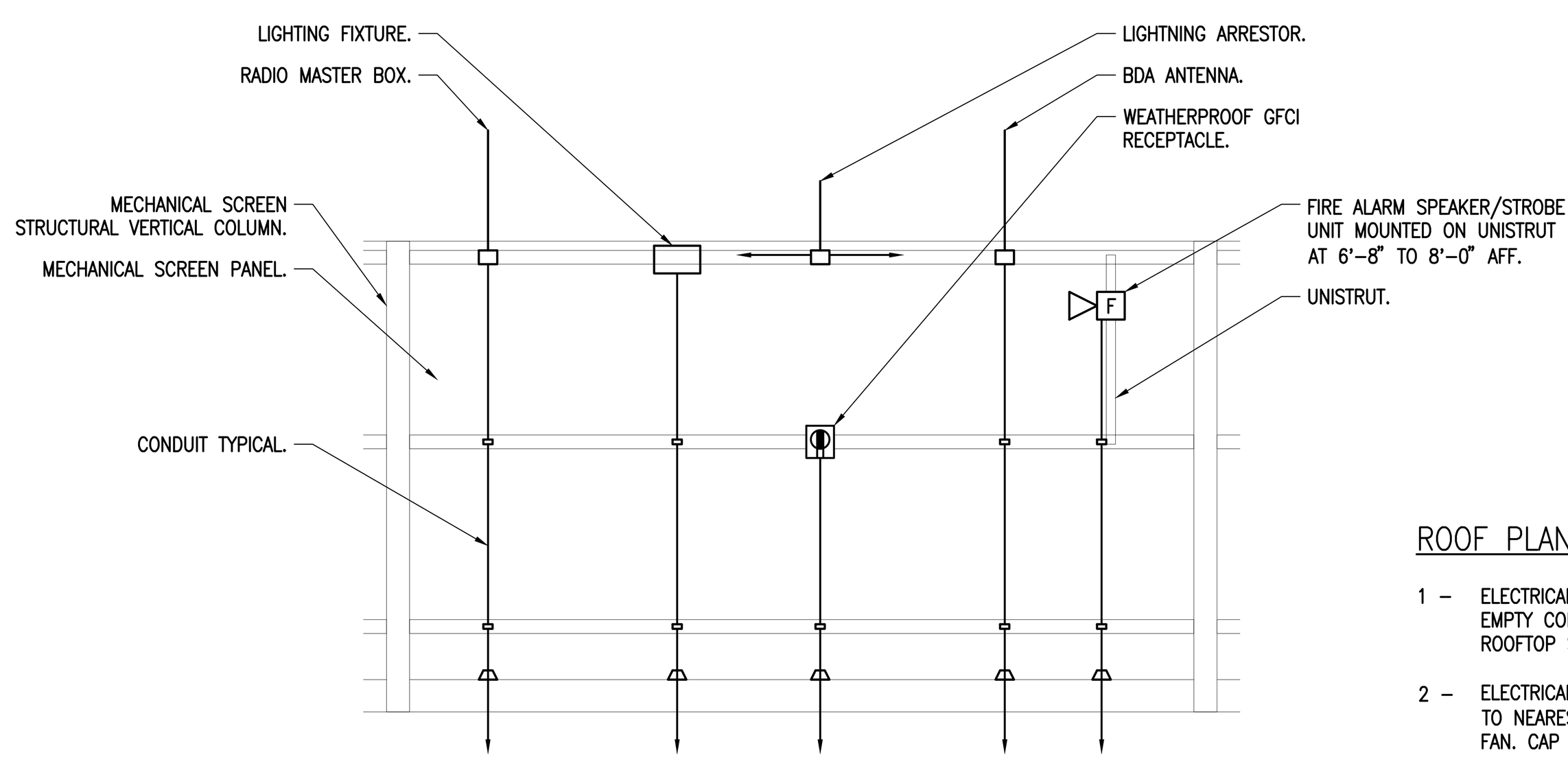

ROOF MECHANICAL SCREEN DETAIL
N.T.S.

NOTES

1 – NO ELECTRICAL EQUIPMENT OR CONDUIT SHALL BE MOUNTED ON THE STRUCTURAL VERTICAL COLUMNS. THERE CANNOT BE ANY PENETRATIONS IN THE VERTICAL COLUMNS.

2 – ALL ELECTRICAL EQUIPMENT AND CONDUIT SHALL BE MOUNTED OR SECURED TO PANEL HORIZONTAL STEEL MEMBERS.

3 – ALL PENETRATIONS SHALL BE SEALED WITH CAULKING.

4 – ALL PENETRATIONS IN PANEL HORIZONTAL STEEL MEMBER SHALL BE ON THE SIDE OR BOTTOM OF STEEL. NO PENETRATIONS OR THE TOP OF THE STEEL MEMBER.

5 – ANTENNAS, LIGHTNING ARRESTORS, AND ASSOCIATED CABLING CHALL BE MOUNTED TO THE SIDE OF THE HORIZONTAL STEEL MEMBER USING A SIDE WALL BRACKET.

6 – ELECTRICAL CONTRACTOR TO FURNISH AND INSTALL ALL REQUIRED SUPPORTS, BOXES, AND ADDITIONAL UNI STRUT REQUIRED.

7 – REFER TO ARCHITECTURAL DETAILS.

8 – COORDINATE INSTALLATION WITH ARCHITECT.

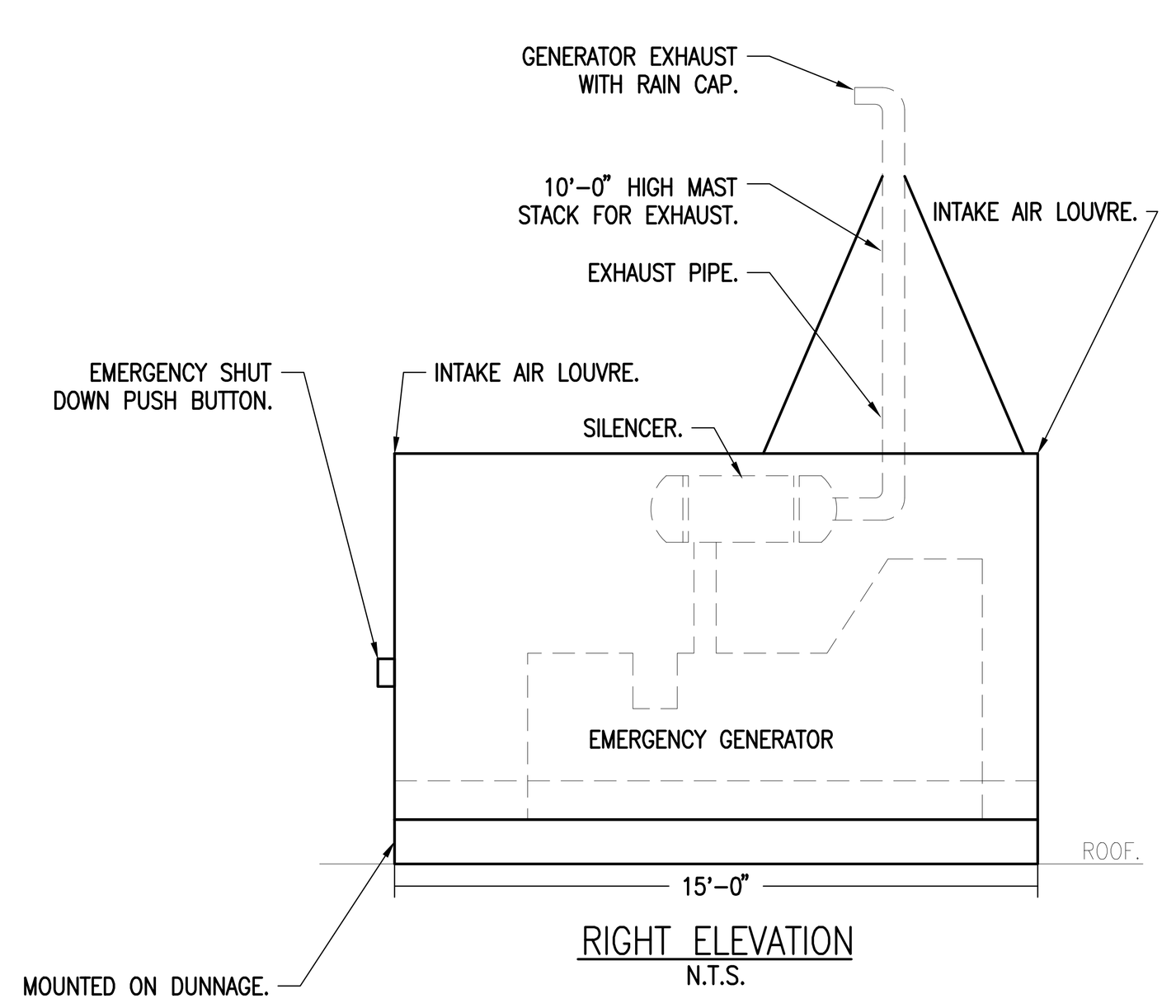

RIGHT ELEVATION
N.T.S.

DETAILS OF NEW GENERATOR HOUSING
N.T.S.
NOTE – DIMENSIONAL DATA SHOWN IS APPROXIMATE.

NOTE

1 – GENERATOR SOUND ATTENUATING HOUSING TO BE FURNISHED AND INSTALLED WITH A WEATHERPROOF FLOOR. FLOOR TO BE MOUNTED TO GENERATOR AND HOUSING TO PROVIDE A WEATHERPROOF SEAL. GENERATOR TO BE MOUNTED ON DUNNAGE.

ROOF PLAN NOTES

1 – ELECTRICAL CONTRACTOR TO FURNISH AND INSTALL ONE 4" AND ONE 1" EMPTY CONDUITS WITH PULL LINE TO MAIN ELECTRICAL ROOM FOR FUTURE ROOFTOP SOLAR EQUIPMENT. CAP AND MAKE WATER–TIGHT.

2 – ELECTRICAL CONTRACTOR TO FURNISH AND INSTALL ONE 3/4" EMPTY CONDUIT TO NEAREST 120V HVAC POWER PANEL LOCATION FOR FUTURE RADON SYSTEM FAN. CAP AND MAKE WATER–TIGHT. COORDINATE ALL LOCATIONS WITH HVAC.

3 – ALL DISCONNECT SWITCHES (FUSED AND UNFUSED), THERMAL SWITCHES AND GROUND FAULT RECEPTACLES INSTALLED ON THE ROOF SHALL BE WEATHERPROOF.

4 – ALL WEATHERPROOF THERMAL SWITCHES SHALL BE MOUNTED INSIDE OF THE FAN HOUSING.

5 – STARTERS FOR ALL HVAC UNITS ON THE ROOF SHALL BE REMOTELY MOUNTED IN THE ELECTRIC CLOSET OR ABOVE CEILING DIRECTLY BELOW THE EQUIPMENT SERVED. EXACT LOCATION SHALL BE DETERMINED ON THE JOB. COORDINATE THE LOCATION OF THE STARTERS WITH THE HVAC AND KITCHEN EQUIPMENT SUBCONTRACTOR. EACH STARTER SHALL BE FURNISHED WITH A SCREW FASTENED NAMEPLATE. REMOVE STARTER FOR HVAC EQUIPMENT MOUNTED ON THE ROOF SHALL BE FURNISHED AND INSTALLED BY ELECTRICAL SUBCONTRACTOR.

6 – THE ELECTRICAL SUBCONTRACTOR SHALL INSTALL AND WIRE ALL LIGHTING FIXTURES AND RECEPTACLES LOCATED INSIDE ALL ROOF TOP UNITS. RECEPTACLES AND LIGHTING FIXTURES FURNISHED BY HVAC.

7 – THE ELECTRICAL SUBCONTRACTOR SHALL COORDINATE THE EXACT LOCATION OF HVAC EQUIPMENT AND REFRIGERATION EQUIPMENT LOCATED ON THE ROOF WITH THE HVAC AND REFRIGERATION SUBCONTRACTORS.

8 – COORDINATE EXACT LOCATION OF DUCT SMOKE DETECTORS WITH HVAC SUBCONTRACTOR. DUCT SMOKE DETECTORS TO BE INSTALLED BELOW ROOF. IF DUCT SMOKE DETECTORS NEED TO BE INSTALLED ON THE ROOF, THE ELECTRICAL CONTRACTOR SHALL INSTALL THE DUCT DETECTORS IN A NEMA 3R ENCLOSURE WITH A HEATING ELEMENT WITH THERMOSTAT. CONNECT THE HEATING ELEMENT TO THE NEAREST LIFE SAFETY EMERGENCY PANEL WITH THE REQUIRED CONDUIT AND WIRE.

9 – ALL EXTERIOR EXPOSED RACEWAYS SHALL BE RIGID STEEL CONDUIT. FINAL CONNECTIONS TO MOTOR–DRIVEN EQUIPMENT SHALL BE LIQUID–TIGHT FLEXIBLE METAL CONDUIT.

10 – ALL SPARE CONDUIT FOR FUTURE USE SHALL BE PROPERLY CAPPED AND MADE WATERTIGHT. PROVIDE PULL LINE IN CONDUITS FOR FUTURE USE.

11 – FURNISH AND INSTALL GFCI RECEPTACLES EVERY 50'–0'' ALONG MECHANICAL SCREEN OR WITHIN 25'–0" OF ANY HVAC UNIT. PROVIDE 20A–1P CIRCUIT FROM NEAREST 120/208V PANEL WITH THE REQUIRED CONDUIT AND WIRE.

12 – FURNISH AND INSTALL A WALL MOUNTED UTILITY LIGHTING FIXTURE EVERY 50'–0'' ALONG MECHANICAL SCREEN. PROVIDE 20A–1P CIRCUIT VIA SINGLE POLE SWITCH LOCATED IN STAIR FROM NEAREST EMERGENCY LIFE SAFETY PANEL PANEL WITH THE REQUIRED CONDUIT AND WIRE.

13 – FURNISH AND INSTALL A WALL MOUNTED WEATHERPROOF FIRE ALARM SPEAKER/ STROBE UNIT EVERY 50'–0'' ALONG MECHANICAL SCREEN. CONNECT TO THE NEAREST SPEAKER CIRCUIT AND STROBE CIRCUIT REQUIRED CONDUIT AND WIRE.

14 – AT THE TOP OF EACH STAIRWELL ON ROOF. FURNISH AND INSTALL ONE SMOKE DETECTOR. FURNISH AND INSTALL ONE FIRE ALARM PULL STATION. FURNISH AND INSTALL ONE INTRUSION ALARM MOTION DETECTOR. FURNISH AND INSTALL ONE INTRUSION ALARM DOOR CONTACT AT EACH DOOR. FURNISH AND INSTALL ONE SECURITY CAMERA. FURNISH AND INSTALL STAIR LIGHTING FIXTURES. PROVIDE THE REQUIRED CONDUIT AND WIRE FOR EACH RESPECTIVE SYSTEM.

15 – FURNISH AND INSTALL THE BDA SYSTEM ANTENNA ON TOP OF THE MECHANICAL SCREEN. FURNISH AND INSTALL TWO 3" CONDUIT FROM BDA ROOM TO THE BDA ANTENNA LOCATION. FURNISH AND INSTALL THE ANTENNA CABLE FROM BDA TO ANTENNA LOCATION.

16 – FURNISH AND INSTALL THE WIRELESS MASTER BOX ANTENNA ON TOP OF THE MECHANICAL SCREEN. FURNISH AND INSTALL ONE 3" CONDUIT FROM THE MASTERBOX LOCATION TO THE ANTENNA LOCATION. FURNISH AND INSTALL THE ANTENNA CABLE FROM THE MASTERBOX TO ANTENNA LOCATION.

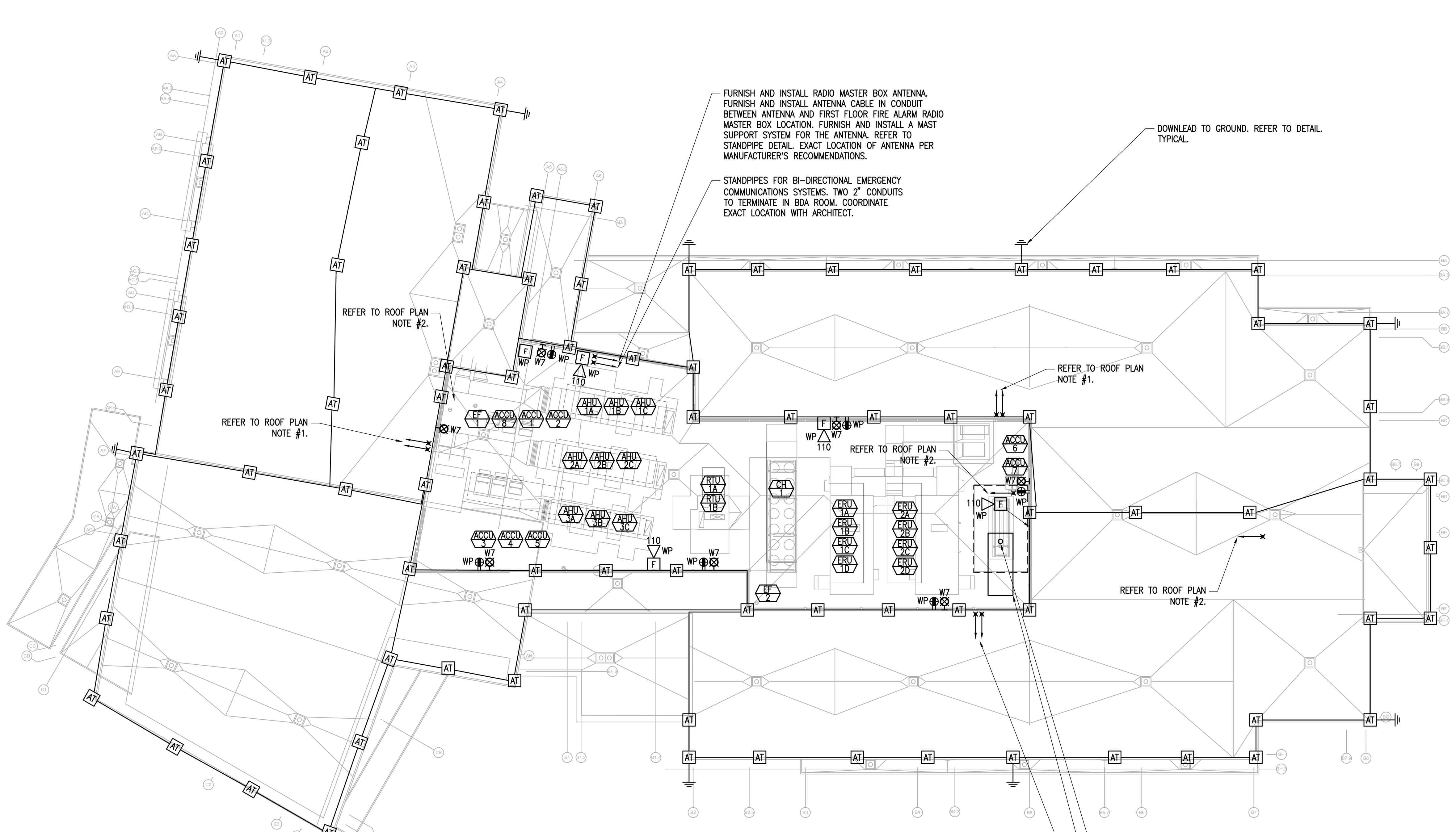

ROOF ELECTRICAL AND LIGHTNING PROTECTION PLAN
1/16"=1'–0"

LIGHTNING PROTECTION STANDARD NOTES

1 – FURNISH AND INSTALL A COMPLETE UL MASTER LABEL CERTIFICATE LIGHTNING PROTECTION SYSTEM. ALL MATERIALS SHOWN ARE MANUFACTURED BY EAST COAST LIGHTNING CO OR APPROVED EQUAL.

2 – A GROUND RESISTANCE TEST SHALL BE PERFORMED IMMEDIATELY AFTER DRIVING GROUND RODS. THE TEST RESULTS AND TEST DATE SHALL BE INCLUDED ON THE FINAL AS–BUILT DRAWING, AND THEN FORWARDED TO THE LIGHTNING PROTECTION EQUIPMENT MANUFACTURER.

3 – CONDUCTORS SHALL MAINTAIN A HORIZONTAL OR DOWNWARD COURSE, FREE FROM "U" OR "V" (DOWN AND UP) POCKETS.

4 – NO BEND OF CONDUCTOR SHALL FORM AN ANGLE OF LESS THAN 90° NOR SHALL HAVE A RADIUS OF BEND LESS THAN 8 INCHES.

5 – AIR TERMINALS SHALL BE PLACED 20'–0" MAXIMUM SPACING AROUND THE ROOF PERIMETER OR ALONG ROOF RIDGES AND WITHIN 2'–0" OF OUTSIDE CORNER EDGE. MID ROOF AIR TERMINALS SHALL BE PLACED 50'–0" MAXIMUM SPACING.

6 – ACTUAL JOBSITE CONDITIONS MAY REQUIRE ALTERATIONS IN AIR TERMINAL, DOWN CONDUCTOR AND GROUND ROD LOCATIONS.

7 – BARE COPPER MATERIALS SHALL NOT BE INSTALLED ON ALUMINUM SURFACES AND ALUMINUM MATERIALS SHALL NOT BE INSTALLED ON COPPER SURFACES.

8 – ALL LIGHTNING PROTECTION CONDUCTORS SHALL BE FASTENED HORIZONTALLY AND VERTICALLY NOT MORE THAN 3'–0" O.C. MAXIMUM SPACING.

9 – METALLIC BODIES OF INDUCTANCE SITUATED WITHIN 6'–0" OF A LIGHTNING CONDUCTOR OR ANOTHER BONDED METAL BODY SHALL BE INTERCONNECTED TO THE LIGHTNING CONDUCTOR SYSTEM, UNLESS INHERENTLY GROUNDED.

10 – BOND TO ALL METAL BODIES OF CONDUCTANCE WITHIN 6'–0" OF THE MAIN LIGHTNING CONDUCTOR SUCH AS EXHAUST FANS, ROOF VENTS, METAL COOLING TOWERS, H.V.A.C. UNITS, LADDERS, RAILINGS, ANTENNAS, SKYLIGHTS, METAL STACKS AND ANY OTHERS LARGE METAL BODY WHOSE HEIGHT EXCEEDS THAT OF THE AIR TERMINALS IN USE, UNLESS PROTECTED BY HIGHER ROOF ELEVATIONS. ALL METAL BODIES ON THE ROOF SHALL BE PROPERLY PROTECTED REGARDLESS IF BONDING IS SHOWN ON THIS DRAWING.

11 – CONNECTIONS TO GROUND ROD SHALL BE MADE AT A POINT NOT LESS THAN 1'–0" BELOW FINISHED GRADE AND 2'–0" AWAY FROM FOUNDATION WALL.

12 – BOND SYSTEM TO WATERLINES (DOMESTIC & FIRE).

13 – ALL ADHESIVE CABLE FASTENERS SHALL BE SECURED TO THE ROOF WITH AN ADHESIVE COMPOUND OR PITCH THAT COMPILES WITH THE ROOFING BOND REQUIREMENTS PER THE ROOF MANUFACTURER'S GUARANTEE. ADHESIVE COMPOUND SHALL BE FURNISHED BY THE ROOFING CONTRACTOR.

14 – ALL PROPER ROOF FLASHINGS SHALL BE FURNISHED, INSTALLED AND WEATHERPROOFED BY THE ROOFING CONTRACTOR PER THE ROOF MANUFACTURER'S GUARANTEE.

15 – ALL PVC CONDUIT SHALL BE FURNISHED, INSTALLED, WEATHERPROOFED AND MAINTAINED FREE FROM OBSTRUCTIONS BY THE ELECTRICAL CONTRACTOR.

16 – CONTRACTOR SHALL PERFORM OHMS RESISTANT TESTING FOR ALL GROUND ROD LOCATIONS PRIOR TO INSTALLATION. GROUND GRID LOCATIONS SHALL MEET ALL NFPA 780 REQUIRED OHMS RATINGS.

17 – LIGHTNING PROTECTION COMPONENT MATERIALS SHALL BE GALVANICALLY COMPATIBLE WITH METAL COPING. COPPER COMPONENTS SHALL NOT BE INSTALLED ON ALUMINUM SURFACES.

18 – ALL VERTICAL DOWN COMPONENTS SHALL BE INSTALLED RECESSED IN WALL.

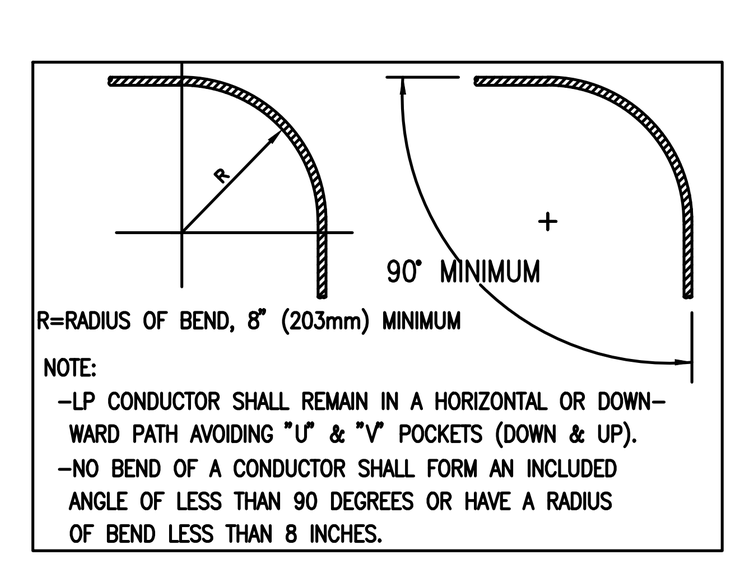

LIGHTNING PROTECTION MATERIALS LIST

——	COPPER LIGHTNING PROTECTION MAIN CONDUCTOR	C32
	ALUMINUM LIGHTNING PROTECTION CONDUCTOR (AT ALUM. MECH. EQUIP. ONLY)	A28
	COPPER LIGHTNING PROTECTION SECONDARY CABLE*	C29
	BIMETAL CONNECTOR	BF100B
	CABLE FASTENERS (FASTEN CABLE EVERY 3FT. MAX.)	BF15B, BF16B
AT	⅜" x 12" COPPER AIR TERMINAL AND ADHESIVE BASE	ATC12C, BB3B
AT	⅜" x 12" COPPER AIR TERMINAL AND SADDLE STRAP	AT12C, BB20B
AT	⅜" x 12" COPPER AIR TERMINAL AND BASE	ATC12C, TSI
•	ROOF PENETRATION AND COPPER DOWN CONDUCTOR IN 1" PVC CONDUIT WITHIN BUILDING CONSTRUCTION TO LOWER ROOF.	
•	ROOF PENETRATION AND COPPER DOWN CONDUCTOR IN 1" PVC CONDUIT WITHIN BUILDING CONSTRUCTION TO GROUND ROD.	
	SECONDARY BONDING: *FLASHING CONNECTOR *METAL ROOF DRAIN / GUTTER CONNECTOR *METAL VENT PIPE CONNECTOR	 BF SERIES BF SERIES BF SERIES
	ALUMINUM BONDING PLATE (AT ALUM. RTU & FANS)	AP
	COPPER BONDING PLATE (TO BASE OF STEEL AT EACH DOWNLEAD)	GP
	PIPE CLAMP (ANTENNAS, RAILINGS, ETC.)	BB13B, BB12B
	"C" CLAMP (LADDERS)	BB
	CABLE CONNECTOR	PF3C
	STRAIGHT SPLICER	CF1B, PF3C
	CROSSOVER CABLE CONNECTOR	PF
	WATERLINE CONNECTOR (FIRE WATER & DOMESTIC WATER)	CMHB–97
——|||	⅝" x 10'–0" COPPERWELD GROUND ROD AND CONNECTOR	GR4S

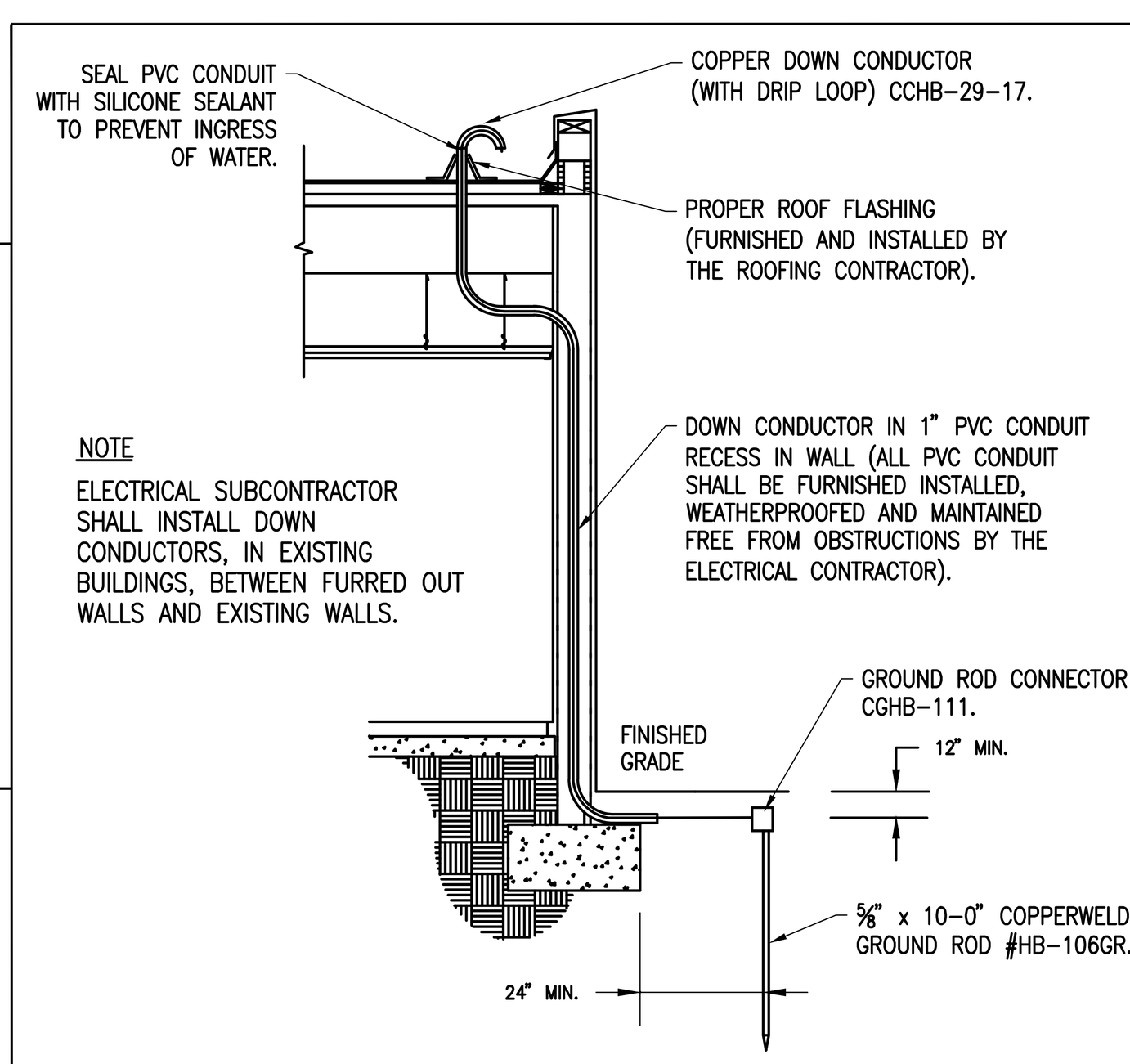

NOTE
ELECTRICAL SUBCONTRACTOR SHALL INSTALL DOWN CONDUCTORS, IN EXISTING BUILDINGS, BETWEEN FURRED OUT WALLS AND EXISTING WALLS.

DOWNLEAD TO GROUND
N.T.S.

NOTE: AIR TERMINALS ARE REQUIRED ON ROOF VENTILATORS/EXH. FANS THAT ARE NOT WITHIN A ZONE OF PROTECTION OR WHEN HIGHER THAN ADJACENT AIR TERMINALS.

NOTE: LIGHTNING PROTECTION COMPONENT MATERIALS SHALL BE GALVANICALLY COMPATIBLE WITH METAL BODIES. ELECTRICAL ENGINEER MUST VERIFY.

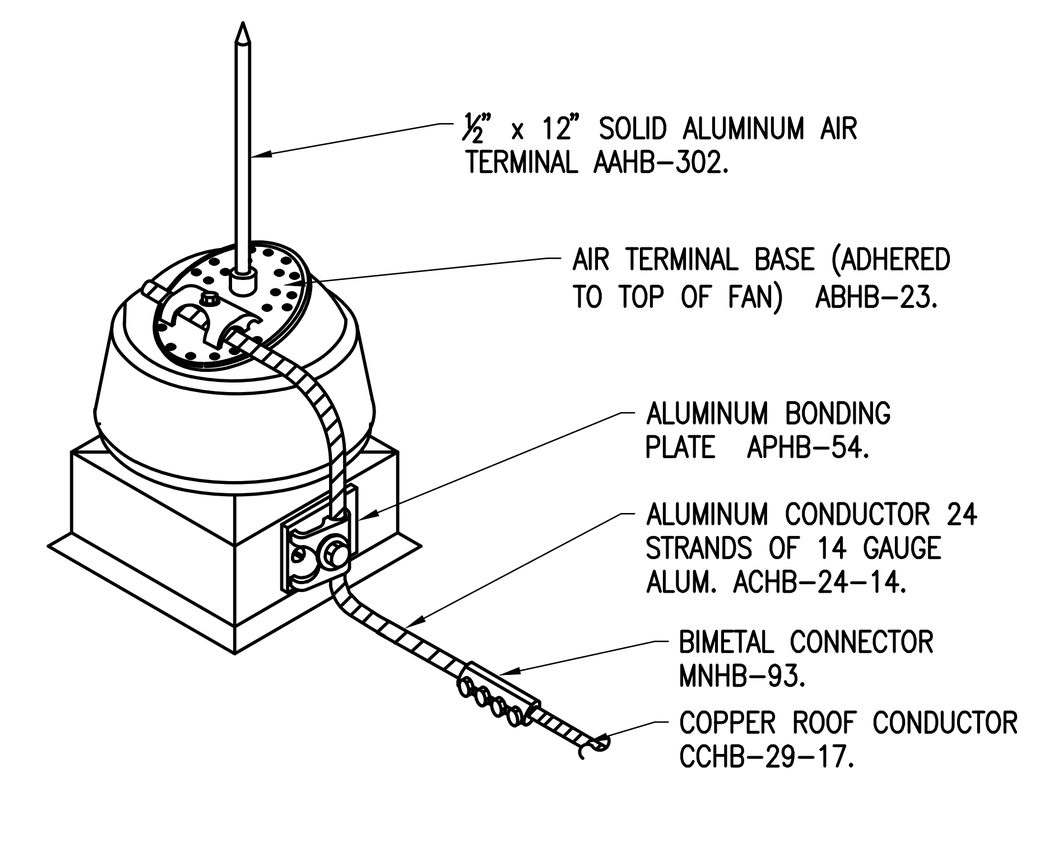

AIR TERMINAL AT EXHAUST FAN
N.T.S.

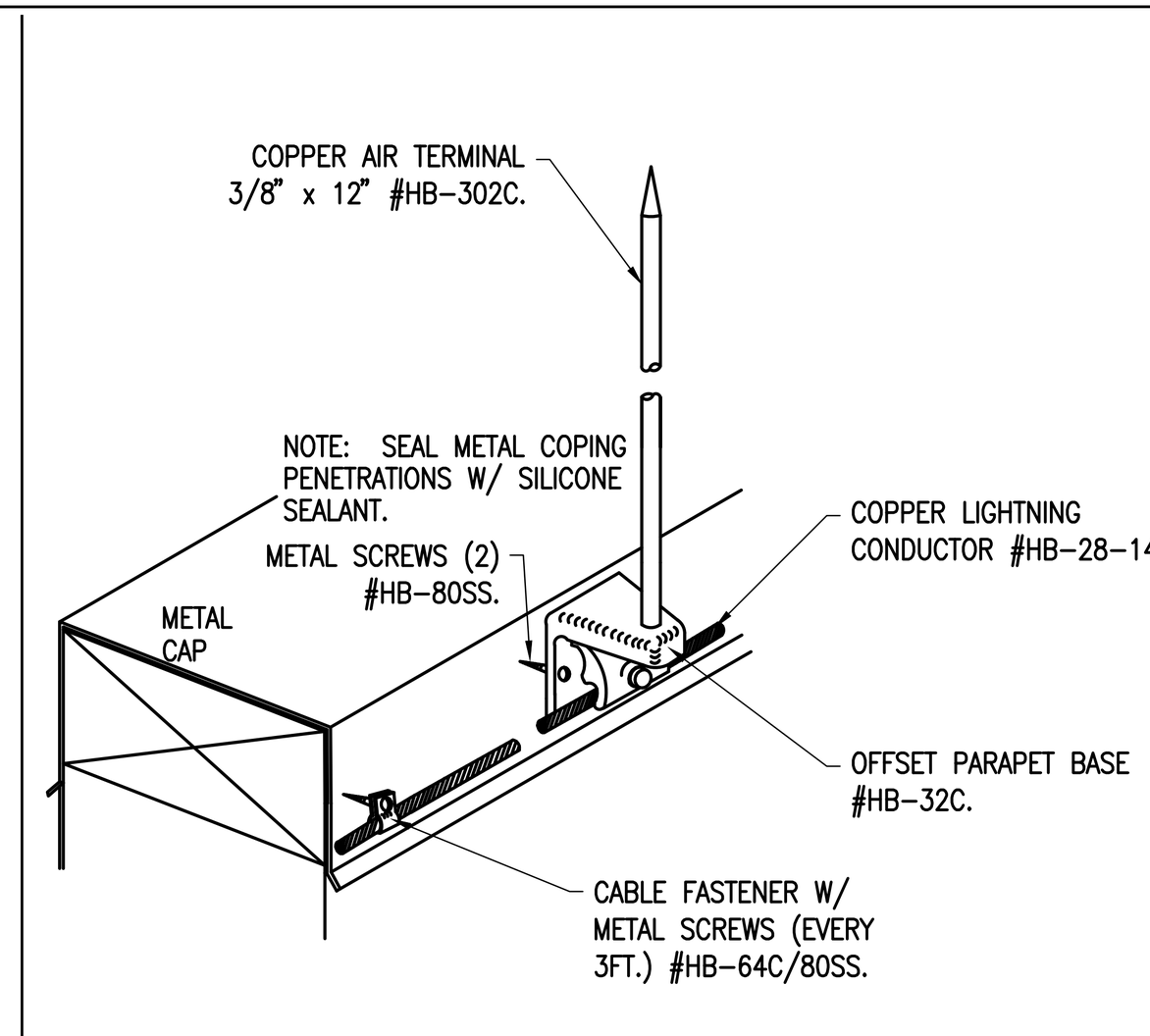

OFFSET PARAPET AND MECHANICAL SCREE AIR TERMINAL BASE DETAIL
N.T.S.

NOTE

1 – LIGHTNING PROTECTION COMPONENT MATERIALS SHALL BE GALVANICALLY COMPATIBLE WITH METAL COPING. COPPER COMPONENTS SHALL NOT BE INSTALLED ON ALUMINUM SURFACES.

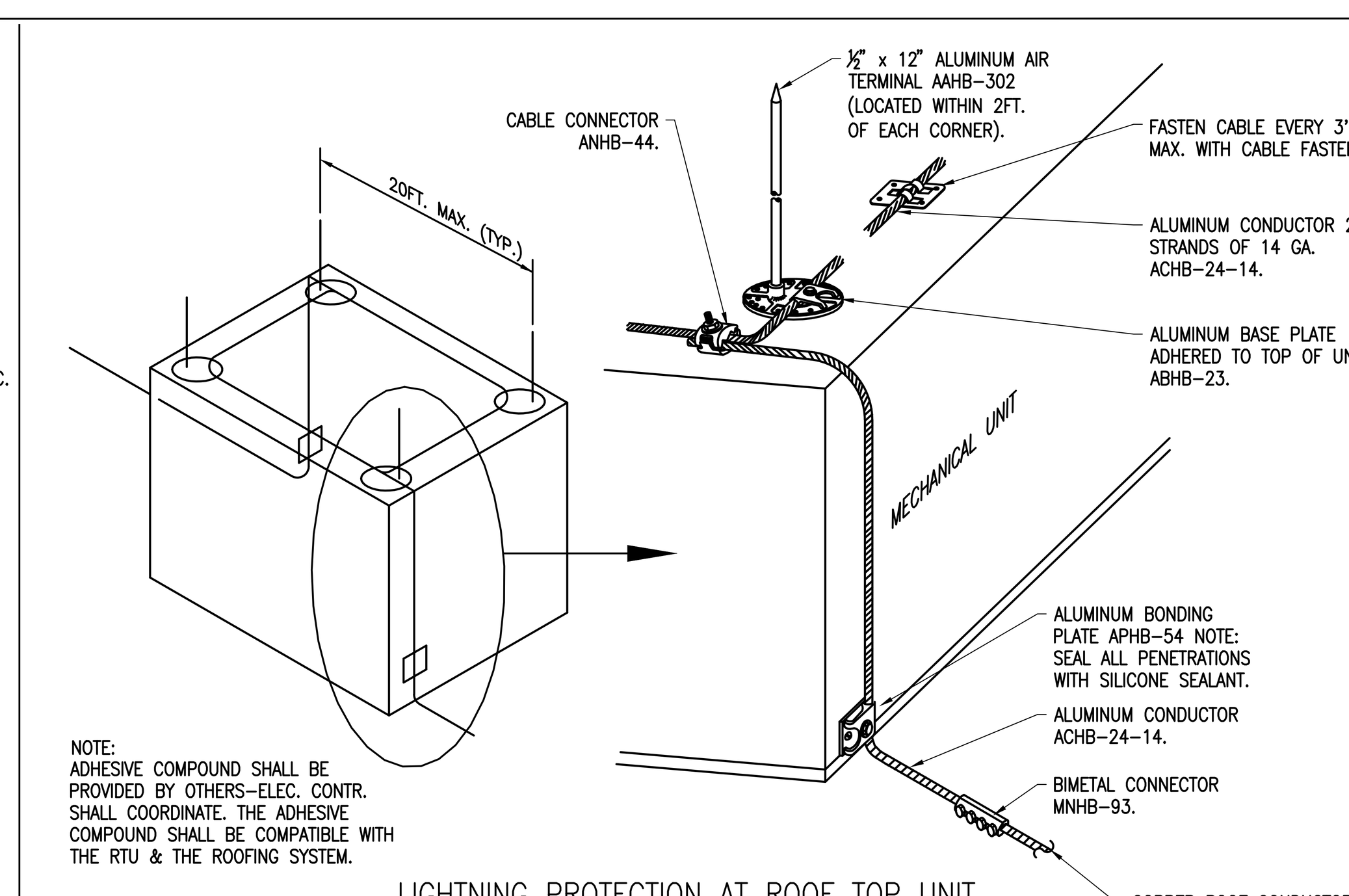

NOTE:
ADHESIVE COMPOUND SHALL BE PROVIDED BY OTHERS–ELEC. CONTR. SHALL COORDINATE. THE ADHESIVE COMPOUND SHALL BE COMPATIBLE WITH THE RTU & THE ROOFING SYSTEM.

LIGHTNING PROTECTION AT ROOF TOP UNIT
N.T.S.

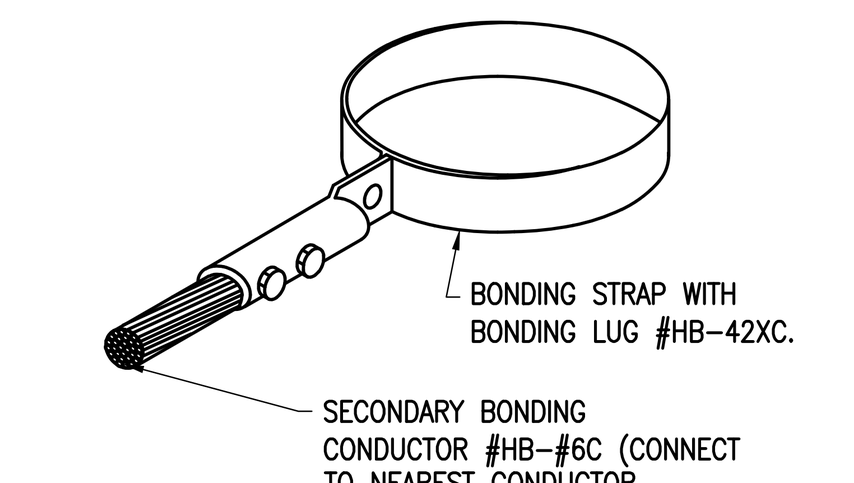

BONDING STRAPS AT (VENT PIPES)
N.T.S.

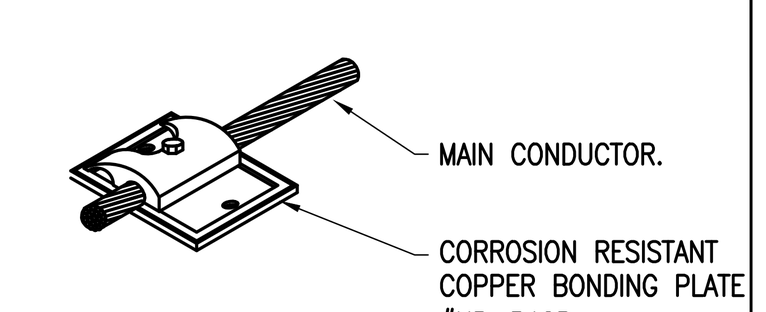

BONDING PLATE
N.T.S.

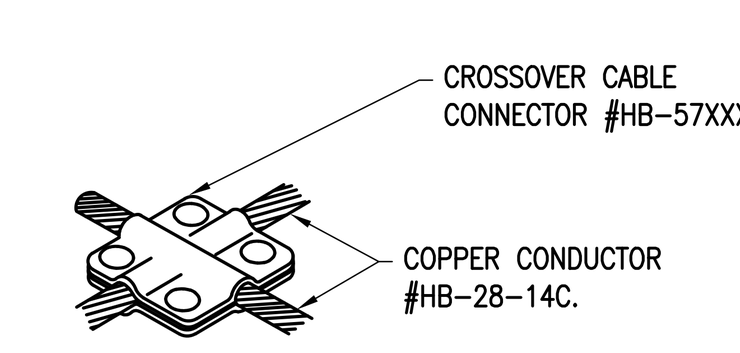

CROSSOVER CABLE CONNECTOR
N.T.S.

NOTE:
PROVIDE BONDING CONNECTION TO METAL FLASHING AT EACH DOWNLEAD LOCATION.

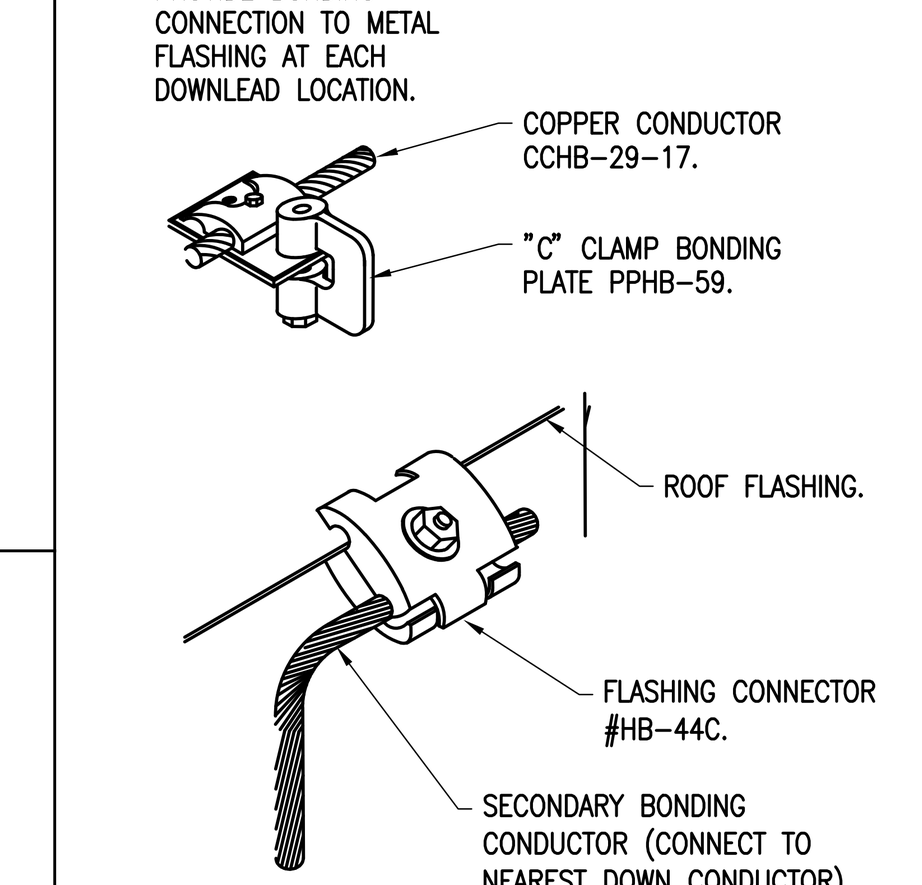

FLASHING CONNECTOR
N.T.S.

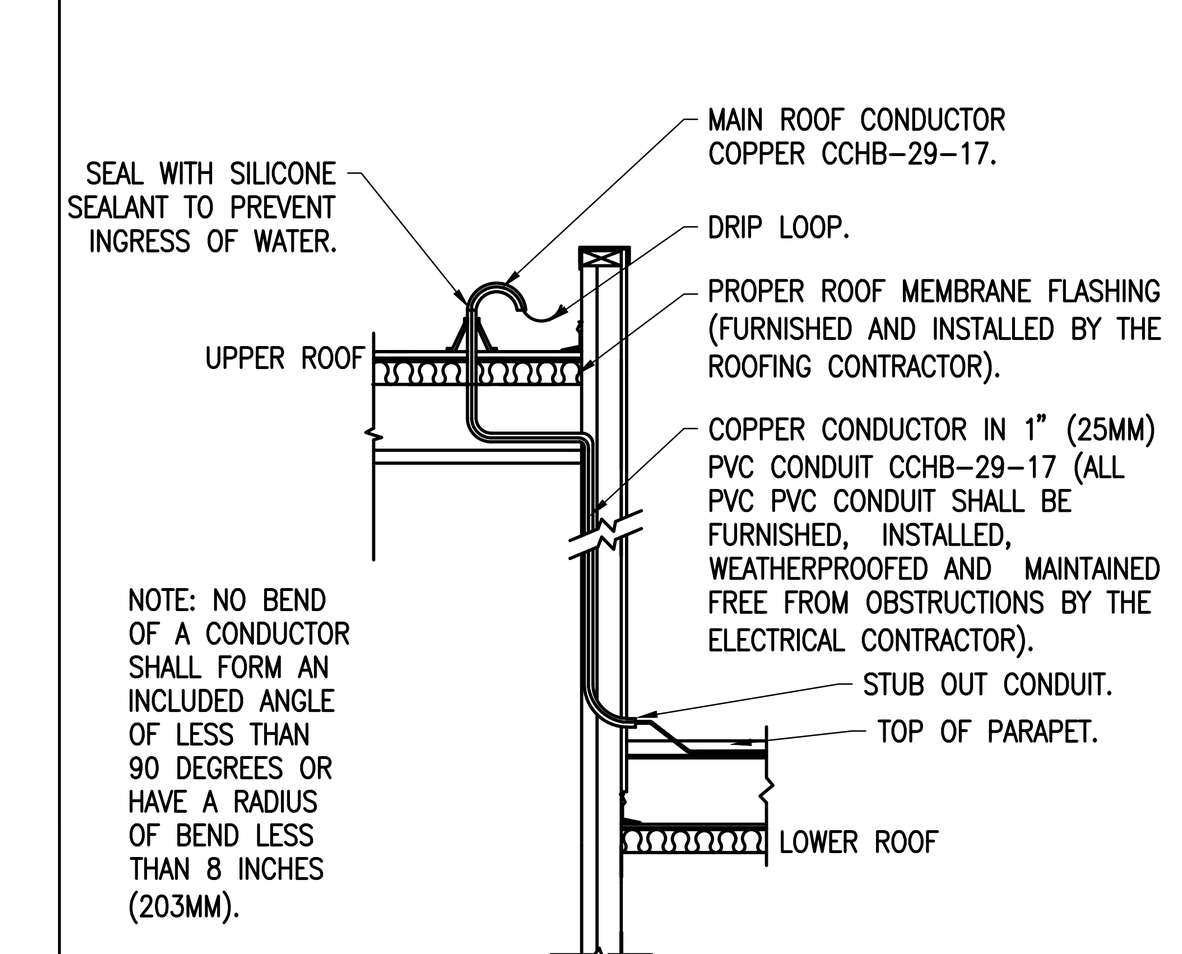

NOTE: NO BEND OF A CONDUCTOR SHALL FORM AN INCLUDED ANGLE OF LESS THAN 90 DEGREES OR HAVE A RADIUS OF BEND LESS THAN 8 INCHES (203MM).

DOWNLEAD TO LOWER ROOF
N.T.S.

NOTE: ADHESIVE COMPOUND SHALL BE PROVIDED BY OTHERS–ELEC. CONTR. SHALL COORDINATE. THE ADHESIVE COMPOUND SHALL BE COMPATIBLE WITH THE ROOFING SYSTEM.

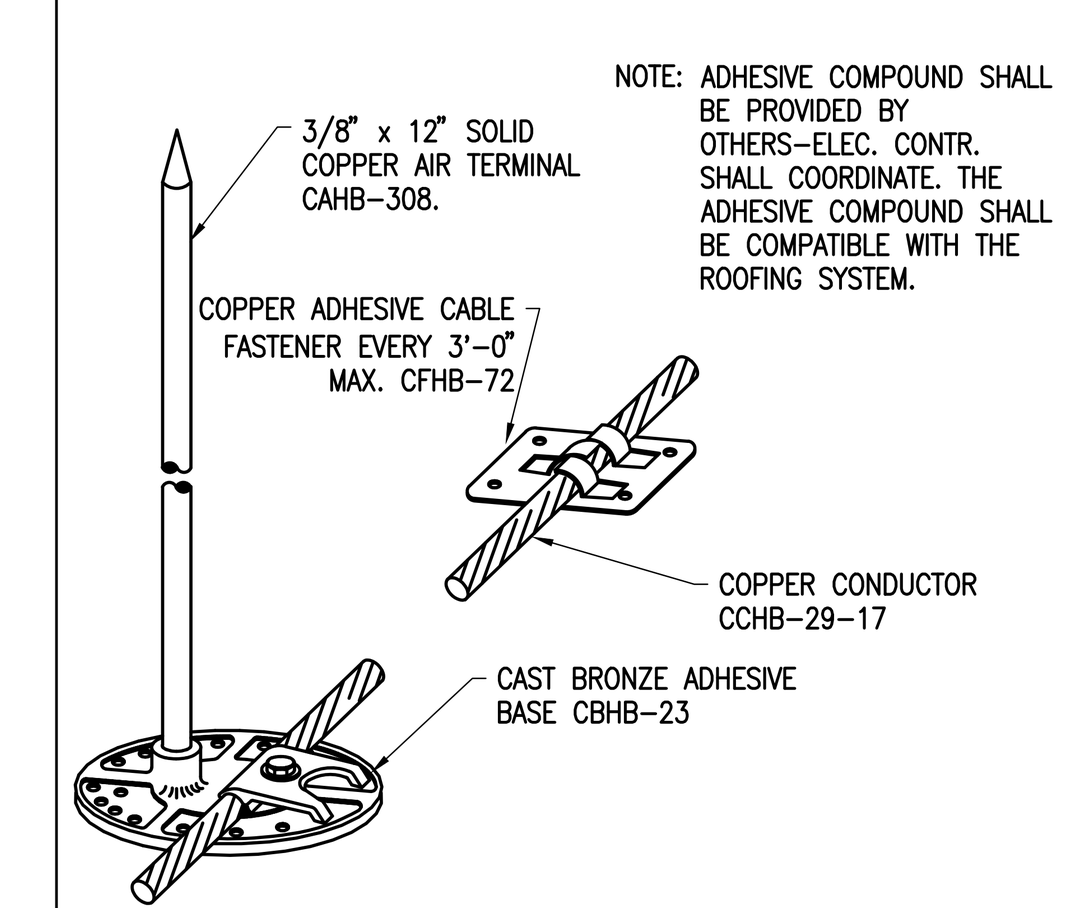

ADHESIVE AIR TERMINAL BASE
N.T.S.

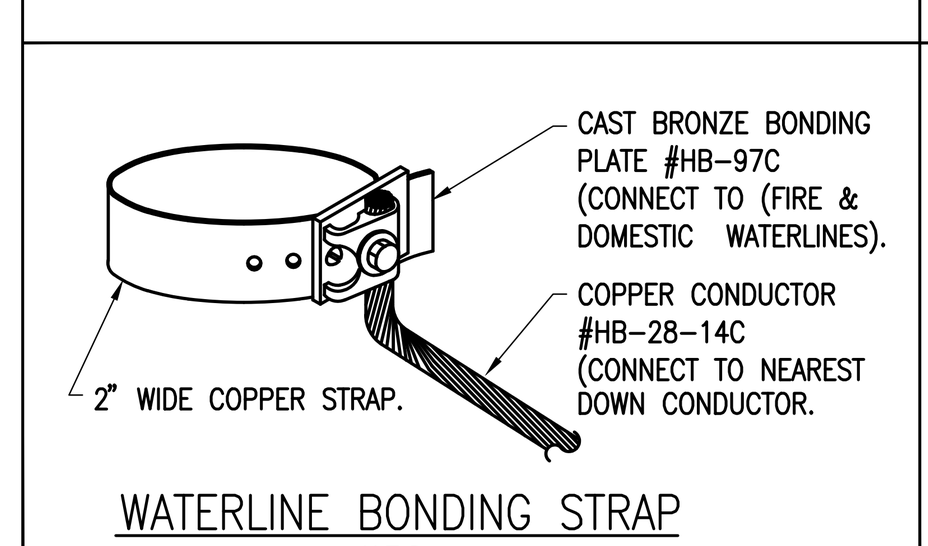

WATERLINE BONDING STRAP
N.T.S.

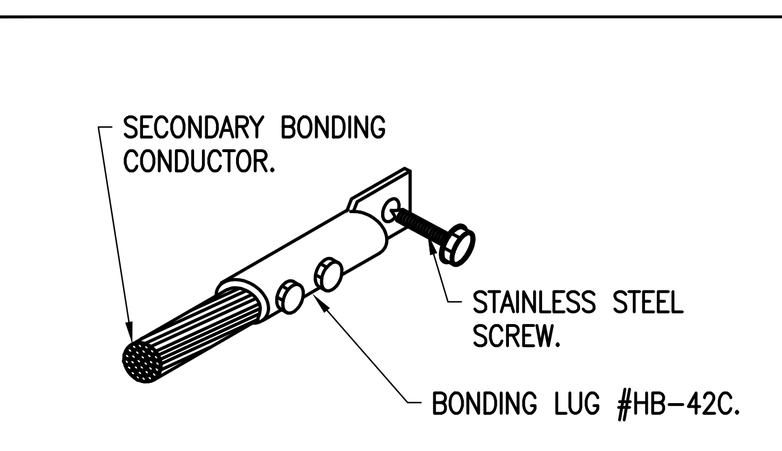

BONDING LUG (ROOF DRAINS)
N.T.S.

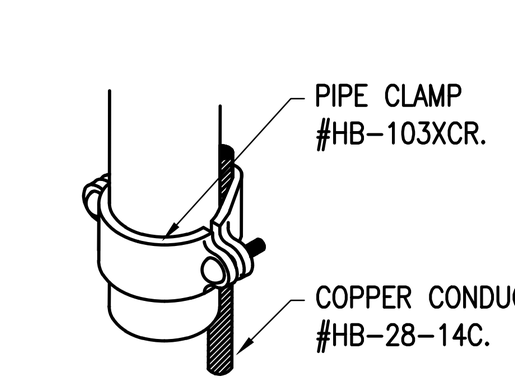

PIPE CLAMP
N.T.S.

AMESBURY ELEMENTARY SCHOOL

AMESBURY, MA

DINISCO DESIGN
architects + planners
99 Chauncy Street, Suite 901
Boston, MA 02111
(617) 426-2858

DGT Associates
Surveying & Engineers
1071 Worcester Road
Framingham, MA 01701
(508) 879-0030

Brown Sardina, Inc.
Landscape Architects
24 Roland Street
Boston, MA 02129
(617) 482-4703

Foley Buhl Roberts & Assoc., Inc.
Structural Engineers
2150 Washington Street
Newton, MA 02462
(617) 527-9600

Crabtree McGrath Assoc., Inc.
Food Service Consultants
161 West Main Street
Georgetown, MA 01833
(978) 352-8500

VAV International, Inc.
Mechanical Engineers
400 West Cummings Park S. 4700
Woburn, MA 01801
(781) 935-7228

Thompson Engineering Company, Inc.
Electrical Engineers
89 Newbury Street, Suite 103
Danvers, MA 01923
(617) 866-9066

EdVance Technology Design, Inc.
Technology Consultants
300 Brickstone Square, Suite 201
Andover, MA 01880
(978) 256-9900

KEY PLAN

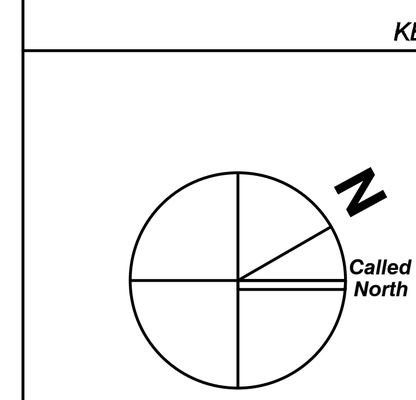

NORTH ARROW

STAMP

Date: 21 August 2020

Drawn By: **JM, TD, EG**

Scale: 0 16 32

Revisions

Number	Date	Description

90% COST ESTIMATE SET

Roof Electrical And Lightning Protection Plan

10.2.13

© 2020 DiNisco Design

I:\18011 - Amesbury Elementary School\10.2.13.dwg / 8/14/2020 3:49:57 PM

KITCHEN NOTES

1 – PROVIDE SHUNT TRIP CIRCUIT BREAKERS FOR ALL EQUIPMENT UNDER EXHAUST VENTILATOR HOOD.

2 – HOOD FIRE SUPPRESSION SYSTEM. CONNECT TO SHUNT TRIP CIRCUIT BREAKERS IN KITCHEN PANELS, AND CONNECT TO FIRE ALARM CONTROL PANEL. REFER TO FIRE ALARM RISER DIAGRAM.

3 – FURNISH AND INSTALL START–STOP CONTROL STATIONS WITH PILOT LIGHT TO CONTROL HOOD EXHAUST FAN. CONNECT TO STARTERS WITH 5#12 IN ½" CONDUIT. EXACT SEQUENTIAL OPERATION OF FANS SHALL BE DETERMINED BY THE BUILDING AUTOMATION SUBCONTRACTOR.

4 – CONNECT HOOD EXHAUST LIGHTS AND EXHAUST VENTILATOR TO CONTROL SWITCH. COMBINATION PILOT LIGHT AND SWITCH FURNISHED AND INSTALLED BY ELECTRICAL SUBCONTRACTOR. HOOD LIGHTS FURNISHED BY KITCHEN EQUIPMENT SUBCONTRACTOR. INSTALLED AND WIRED BY ELECTRICAL SUBCONTRACTOR.

5 – COORDINATE THE EXACT LOCATION OF ELECTRICAL OUTLETS FOR KITCHEN EQUIPMENT WITH THE KITCHEN EQUIPMENT SUBCONTRACTOR.

6 – ALL DISCONNECT SWITCHES (FUSED AND NON–FUSED) IN THE KITCHEN AREA SHALL BE OF THE WEATHERPROOF TYPE.

7 – ON EACH OF WALK–IN FREEZER AND WALK–IN COOLER, FURNISH 6#12 IN ½" CONDUIT. BETWEEN EVAPORATOR COIL AND CONDENSER UNIT, FOR 24V CONTROL.

8 – ALL HOOD LIGHTING FIXTURES ARE FURNISHED BY THE KITCHEN EQUIPMENT SUBCONTRACTOR. INSTALLED AND WIRED BY THE ELECTRICAL SUBCONTRACTOR.

9 – ALL RECEPTACLES IN THE KITCHEN SHALL BE OF THE GFCI TYPE RECEPTACLE. IF RECEPTACLE CAN NOT BE OF THE GFCI TYPE, THEN CIRCUIT BREAKER THAT SERVES THAT RECEPTACLE SHALL BE OF THE GFCI TYPE.

10 – PROVIDE EMERGENCY WIRING CONNECTION TO FREEZER CONDENSER ON ROOF WITH 6#12 IN 1½" CONDUIT FOR CONTROL WIRING. PROVIDE EMERGENCY POWER WIRING CONNECTION TO FREEZER EVAPORATOR, FREEZER HEAT TRACE, AND REFRIGERATION ALARM SYSTEM CONTROL PANEL.

11 – PROVIDE EMERGENCY WIRING CONNECTION TO COOLER CONDENSER ON ROOF WITH 6#12 IN 1½" CONDUIT FOR CONTROL WIRING. PROVIDE EMERGENCY POWER WIRING CONNECTION TO COOLER EVAPORATOR AND REFRIGERATION ALARM SYSTEM CONTROL PANEL.

12 – COORDINATE EXACT LOCATIONS OF FREEZER AND COOLER CONDENSER UNITS WITH FOOD SERVICE.

13 – FURNISH AND INSTALL THREE 1" CONDUITS FROM EACH PANEL TUB TO ACCESSIBLE CEILING CAVITY ABOVE FOR FUTURE.

14 – RECEPTACLES ON EMERGENCY POWER SHALL BE RED.

15 – ELECTRICAL CONTRACTOR TO FURNISH AND INSTALL THE REQUIRED WIRING FROM THE UTILITY DISTRIBUTION SYSTEM ITEM #46 TO THE FOLLOWING ITEMS:

- A – PROVIDE 20A/1P CIRCUIT TO FOUR BURNER RANGE WITH OVEN #32.
- B – PROVIDE 20A/1P CIRCUIT TO THIRTY–GALLON BRAISING PAN #34.
- C – PROVIDE(2) 20A/1P CIRCUITS TO TWELVE–PAN STEAMER #40.
- D – PROVIDE(2) 20A/1P CIRCUITS TO DOUBLE CONVECTION OVEN #41.
- E – PROVIDE(2) 20A/1P CIRCUITS TO DOUBLE CONVECTION OVEN #41.
- F – PROVIDE 20A/1P CIRCUIT TO EXHAUST VENTILATOR LIGHTS #44.

16 – ELECTRICAL CONTRACTOR TO FURNISH AND INSTALL THE REQUIRED WIRING FOR VENTILATOR DEMAND CONTROL SYSTEM, ITEM #45:

- A – 20A/1P CIRCUIT – DROP FROM ABOVE FOR CONNECTION TO VENTILATOR CONTROL AND HOOD LIGHTS AT ITEM #44.
- B – ELECTRICAL CONTRACTOR TO PROVIDE CAT5 CONNECTION TO REMOTE TOUCH SCREEN (CABLE SUPPLIED WITH SYSTEM).
- C – ELECTRICAL CONTRACTOR TO PROVIDE HIGH VOLTAGE CONNECTIONS FROM VFDS TO EXHAUST FAN.
- D – ELECTRICAL CONTRACTOR TO PROVIDE WIRING TO TEMPERATURE SENSORS AT HOOD.
- E – ELECTRICAL CONTRACTOR TO PROVIDE WIRING TO ROOM TEMPERATURE SENSORS.
- F – ELECTRICAL CONTRACTOR TO PROVIDE A CAT 6A DATA CABLE FROM BUILDING MANAGEMENT SYSTEM REMOTE CONTROL.

17 – ELECTRICAL CONTRACTOR TO FURNISH AND INSTALL FEEDER TO JUNCTION BO FOR FUTURE CONNECT TO WAREWASHER AND BOOSTER HEATER. COORDINATE EXACT LOCATION WITH KITCHEN EQUIPMENT CONTRACTOR AND ARCHITECT.

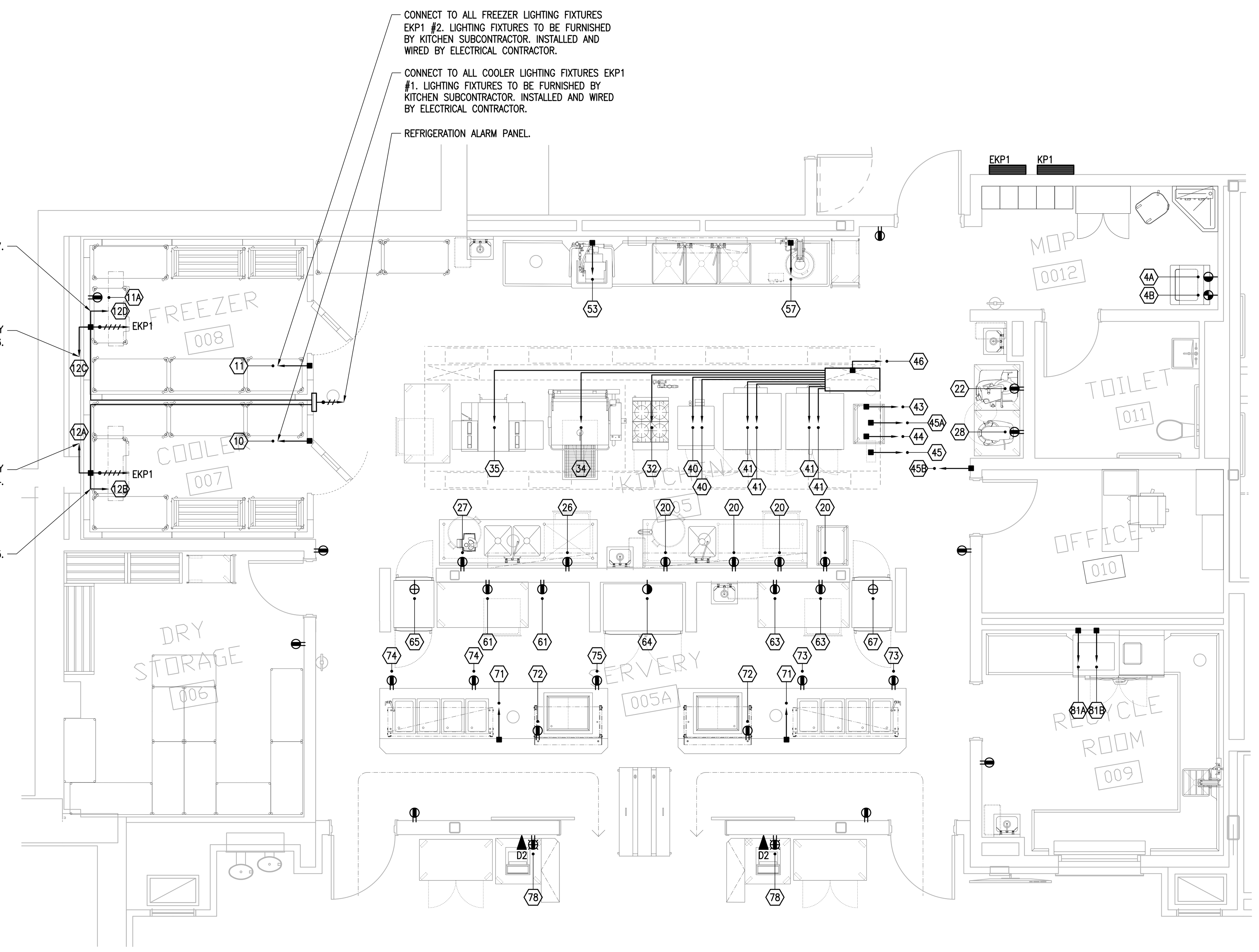

GROUND FLOOR
ENLARGED KITCHEN PLAN
SCALE: ¼" = 1'-0"

SCHEDULE OF STANDBY KITCHEN PANEL – EKP1

120/208–VOLTS 3–PHASE 4–WIRE WITH EQUIPMENT GROUND TERMINAL BUS – DOOR–IN–DOOR TRIM – RECESSED MOUNTED – 22KA A I.C.

POS. NO.	ITEM TAG	BREAKER FRAME–TRIP–POLE	PROTECTS FEEDER TO	CIRCUIT BREAKER GENERAL ELECTRIC OR APPROVED EQUAL	FEEDER	REMARKS
		100/100/3P	MAIN CIRCUIT BREAKER		--	--
1	10	100/20/1P	WALK IN COOLER (LIGHTS, ETC.)	THQB	2	--
2	11	100/20/1P	WALK IN FREEZER (LIGHTS, ETC.)	THQB	2	--
3	11A	100/20/1P	FREEZER HEAT TRACE	THQB	2	--
4	12A	100/20/3P	COOLER CONDENSING UNIT (REMOTE)	THQB	2	--
5	12B	100/20/1P	COOLER EVAPORATOR	THQB	2	--
6	12C	100/20/3P	FREEZER CONDENSING UNIT (REMOTE)	THQB	2	--
7	12D	100/20/2P	FREEZER EVAPORATOR	THQB	2	--
8	20	100/20/1P	COOK'S TABLE	THQB	2	--
9	20	100/20/1P	COOK'S TABLE	THQB	2	--
10	22	100/20/1P	AUTOMATIC SLICER	THQB	2	--
11	43	100/20/1P	FIRE SUPPRESSION SYSTEM	THQB	2	--
12	64	100/20/1P	PASS–THRU REFRIGERATOR	THQB	2	--
13	65	100/20/2P	PASS–THRU HEATED CABINET	THQB	2	NEMA 6–20R RECEPTACLE
14	67	100/20/2P	PASS–THRU HEATED CABINET	THQB	2	NEMA 6–20R RECEPTACLE
15	75	100/20/1P	MILK COOLER	THQB	2	--
16	78	100/20/1P	CASHIER TERMINALS	THQB	2	--
17		100/20/1P	GAS VALVE CONTROL PANEL	THQB	2	--
18–37		100/20/3P	SPARES	THQB		--

UTILITY DISTRIBUTION SYSTEM

ITEM NO	CIRCUIT SIZE	EQUIPMENT	FEEDER	REMARKS
32	20A/1P	FOUR BURNER RANGE WITH OVEN	2	POWERED FROM ITEM #46.
34	20A/1P	FORTY–GALLON BRAISING PAN	2	POWERED FROM ITEM #46.
35	20A/1P	CONVEYOR OVEN WITH MOBILE STAND	2	POWERED FROM ITEM #46.
40	20A/1P	TWELVE–PAN STEAMER	2	POWERED FROM ITEM #46.
40	20A/1P	TWELVE–PAN STEAMER	2	POWERED FROM ITEM #46.
41	20A/1P	DOUBLE CONVECTION OVEN	2	POWERED FROM ITEM #46.
41	20A/1P	DOUBLE CONVECTION OVEN	2	POWERED FROM ITEM #46.
41	20A/1P	DOUBLE CONVECTION OVEN	2	POWERED FROM ITEM #46.
41	20A/1P	DOUBLE CONVECTION OVEN	2	POWERED FROM ITEM #46.

SCHEDULE OF NORMAL KITCHEN PANEL – KP1

120/208–VOLTS 3–PHASE 4–WIRE WITH EQUIPMENT GROUND TERMINAL BUS – DOOR–IN–DOOR TRIM – RECESSED MOUNTED – 22KA A I.C.

POS. NO.	ITEM TAG	BREAKER FRAME–TRIP–POLE	PROTECTS FEEDER TO	CIRCUIT BREAKER GENERAL ELECTRIC OR APPROVED EQUAL	FEEDER	REMARKS
		400/400/3P	MAIN CIRCUIT BREAKER	TQD	--	--
1	4A	100/20/1P	STACKED CLOTHES WASHER	THQB	2	--
2	4B	100/30/2P	STACKED CLOTHES DRYER	THQB	3	--
3	26	100/20/1P	PREP COUNTER	THQB	2	--
4	27	100/20/1P	FOOD PROCESSOR	THQB	2	--
5	28	100/20/1P	MIXER	THQB	2	--
6	44	100/20/1P	EXHAUST VENTILATOR LIGHTS	THQB	2	--
7	46	100/50/3P	UTILITY DISTRIBUTION SYSTEM	THQB	5	--
8	53	100/60/3P	WAREWASHER – MACHINE	THQB	6	--
9	57	100/20/3P	DIPSOSER	THQB	2	--
10	61	100/20/1P	MOBILE WORK TABLE	THQB	2	--
11	61	100/20/1P	MOBILE WORK TABLE	THQB	2	--
12	63	100/20/1P	MOBILE WORK TABLE	THQB	2	--
13	63	100/20/1P	MOBILE WORK TABLE	THQB	2	--
14	71	100/20/2P	HOT FOOD WELLS (GROUP OF 4)	THQB	2	--
15	71	100/20/2P	HOT FOOD WELLS (GROUP OF 4)	THQB	2	--
16	72	100/20/1P	DROP–IN COLD PAN	THQB	2	--
17	72	100/20/1P	DROP–IN COLD PAN	THQB	2	--
18	73	100/20/1P	SERVING COUNTER	THQB	2	--
19	73	100/20/1P	SERVING COUNTER	THQB	2	--
20	74	100/20/1P	SERVING COUNTER	THQB	2	--
21	74	100/20/1P	SERVING COUNTER	THQB	2	--
22	81A	100/100/3P	WAREWASHER – MACHINE	THQB	10	INSTALLED UNDER TRAY WASH/RECYCLE ROOM ADD ALTERNATE. REFER TO NOTE #17.
23	81B	100/80/3P	WAREWASHER – BOOSTER HEATER	THQB	8	INSTALLED UNDER TRAY WASH/RECYCLE ROOM ADD ALTERNATE. REFER TO NOTE #17.
24		100/20/1P	CONVENIENCE RECEPTACLES	THQB	3	--
25		100/20/1P	CONVENIENCE RECEPTACLES	THQB	3	--
26–50		100/20/1P	SPARES	THQB	2	--

NOTES
1 – REFER TO KITCHEN DRAWINGS FOR ELECTRICAL SCOPE OF WORK.
2 – REFER TO BRANCH CIRCUIT AND FEEDER SCHEDULES, DWG 10.3.01.

AMESBURY ELEMENTARY SCHOOL

AMESBURY, MA

DINISCO DESIGN
architects + planners
99 Chauncy Street, Suite 901
Boston, MA 02111
(617) 426-2858

DGT Associates
Surveying & Engineers
1071 Worcester Road
Framingham, MA 01701
(508) 879-0030

Brown Sardina, Inc.
Landscape Architects
24 Roland Street
Boston, MA 02129
(617) 482-4703

Foley Buhl Roberts & Assoc., Inc.
Structural Engineers
2150 Washington Street
Newton, MA 02462
(617) 527-9600

Crabtree McGrath Assoc., Inc.
Food Service Consultants
161 West Main Street
Georgetown, MA 01833
(978) 352-8500

VAV International, Inc.
Mechanical Engineers
400 West Cummings Park S. 4700
Woburn, MA 01801
(781) 935-7228

Thompson Engineering Company, Inc.
Electrical Engineers
89 Newbury Street, Suite 103
Danvers, MA 01923
(617) 866-9066

EdVance Technology Design, Inc.
Technology Consultants
300 Brickstone Square, Suite 201
Andover, MA 01880
(978) 256-9900

KEY PLAN

NORTH ARROW Called North

STAMP

Date: 21 August 2020

Drawn By: **JM, TD, EG**

Scale: 0 4 8

Revisions
Number Date Description

90% COST ESTIMATE SET

Enlarged Kitchen Electrical Plan

10.2.14

© 2020 DiNisco Design

I:\18011 - Amesbury Elementary School\10.2.14.dwg / 8/14/2020 3:50:07 PM

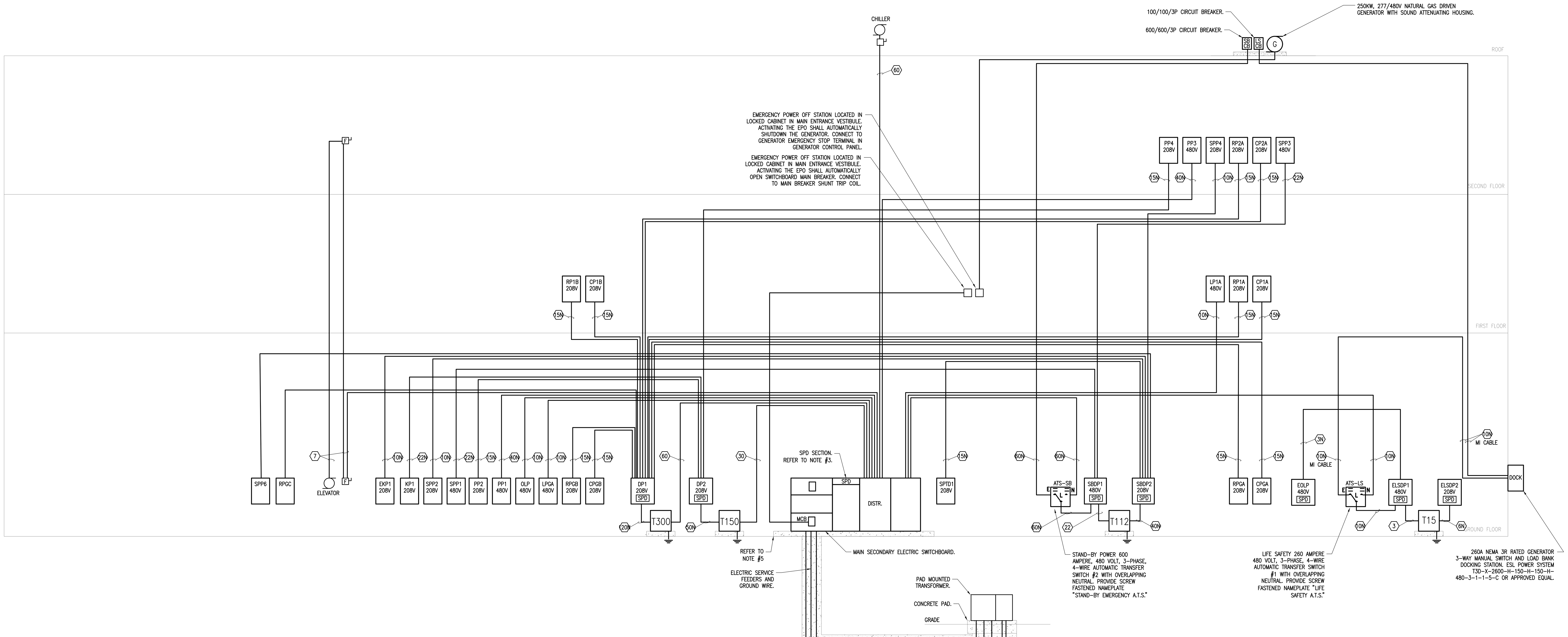

208 & 480-VOLT NORMAL AND EMERGENCY LIGHT AND POWER RISER DIAGRAM

N.T.S.

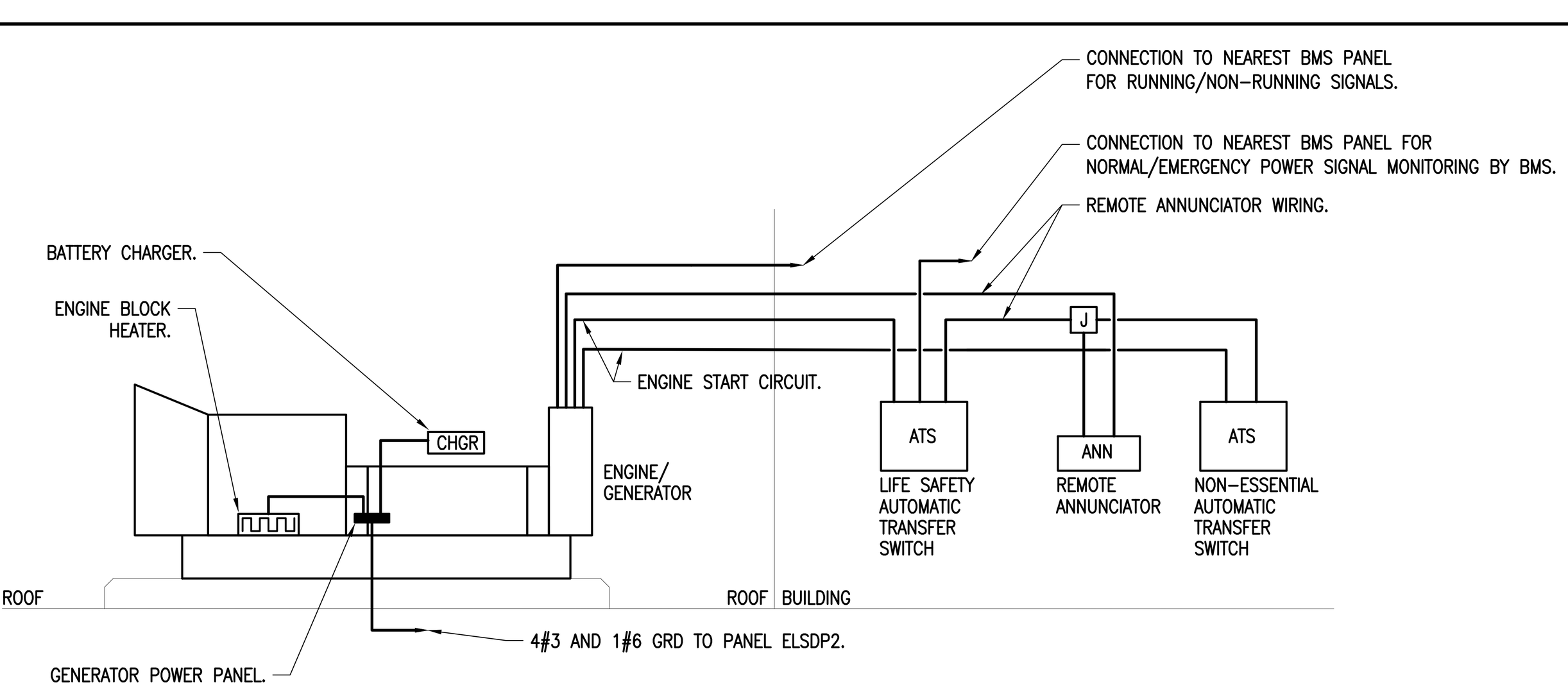

GENERATOR AUXILIARIES WIRING DETAIL

N.T.S.

GENERATOR WIRING DIAGRAM NOTES

1 – ALL GENERATOR CONTROL WIRING BETWEEN THE GENERATOR AND AUTOMATIC TRANSFER SWITCHES SHALL BE INSTALLED COMPLETELY INDEPENDENT OF ALL WIRING PER MEC 700.10.D.4.

DRY TYPE TRANSFORMER SCHEDULE

480-VOLT PRIMARY – 120/208-VOLT 3-PHASE 4-WIRE SECONDARY – NEMA TP-1 RATED

TAG NO.	KVA	PRIMARY AMPS	480V OVER CURRENT	480V FEEDER	SECONDARY AMPS	120/208V OVER CURRENT	120/208V FEEDER (IF K-13, ADD SECOND NEUTRAL)
T9	9	11	20A-3P	3#12 & 1#12 GRD ¾" CONDUIT	25	40A-3P	4#8 & 1#10 GRD ¾" CONDUIT
T15	15	18	30A-3P	3#10 & 1#10 GRD ¾" CONDUIT	42	60A-3P	4#6 & 1#10 GRD 1" CONDUIT
T30	30	36	70A-3P	3#4 & 1#8 GRD 1" CONDUIT	83	100A-3P	4#3 & 1#8 GRD 1¼" CONDUIT
T45	45	54	90A-3P	3#3 & 1#8 GRD 1¼" CONDUIT	125	150A-3P	4#1/0 & 1#6 GRD 2" CONDUIT
T75	75	90	150A-3P	3#1/0 & 1#6 GRD 1½" CONDUIT	208	225A-3P	4#4/0 & 1#4 GRD 2½" CONDUIT
T112	112.5	135	225A-3P	3#4/0 & 1#4 GRD 2" CONDUIT	313	400A-3P	4#600MCM & 1#3 GRD 4" CONDUIT
T150	150	181	300A-3P	3#350MCM & 1#4 GRD 3" CONDUIT	417	500A-3P	TWO SETS OF 4#250MCM & 1#2 GRD – 3" CONDUIT
T225	225	271	400A-3P	3#600MCM & 1#3 GRD 4" CONDUIT	625	800A-3P	TWO SETS OF 4#600MCM & 1#1/0 GRD – 4" CONDUIT
T300	300	362	500A-3P	TWO SETS OF 3#250MCM & 1#2 GRD – 2½" CONDUIT	833	1200A-3P	THREE SETS OF 4#600MCM & 1#3/0 GRD – 4" CONDUIT
T400	400	482	600A-3P	TWO SETS OF 3-#350MCM & 1#1 GRD – 2½" CONDUIT	1112	1600A-3P	FOUR SETS OF 4#600MCM & 1#4/0 GRD – 4" CONDUIT
T500	500	602	800A-3P	TWO SETS OF 3#600MCM & 1#1/0 GRD – 4" CONDUIT	1390	2000A-3P	FIVE SETS OF 4#600MCM & 1#250MCM GRD – 4" CONDUIT

3-PHASE BRANCH CIRCUIT & FEEDER SCHEDULE – EMT CONDUIT					1-PHASE BRANCH CIRCUIT & FEEDER SCHEDULE – EMT CONDUIT			
TAG	FOUR (4) COPPER WIRE – 75° RATING	TAG	THREE (3) COPPER WIRE – 75° RATING	CIRCUIT RATING	TAG	THREE (3) COPPER WIRE – 75° RATING	TAG	TWO (2) COPPER WIRE – 75° RATING
2N	4#12 & 1#12 GRD – ¾"C	2	3#12 & 1#12 GRD – ¾"C	20A	2N	3#12 & 1#12 GRD – ¾"C	2	2#12 & 1#12 GRD – ¾"C
3N	4#10 & 1#10 GRD – ¾"C	3	3#10 & 1#10 GRD – ¾"C	30A	3N	3#10 & 1#10 GRD – ¾"C	3	2#10 & 1#10 GRD – ¾"C
4N	4#8 & 1#10 GRD – ¾"C	4	3#8 & 1#10 GRD – ¾"C	40A	4N	3#8 & 1#10 GRD – ¾"C	4	2#8 & 1#10 GRD – ¾"C
5N	4#8 & 1#10 GRD – ¾"C	5	3#8 & 1#10 GRD – ¾"C	50A	5N	3#8 & 1#10 GRD – ¾"C	5	2#8 & 1#10 GRD – ¾"C
6N	4#6 & 1#10 GRD – 1"C	6	3#6 & 1#10 GRD – ¾"C	60A	6N	3#6 & 1#10 GRD – ¾"C	6	2#6 & 1#10 GRD – ¾"C
7N	4#4 & 1#8 GRD – 1¼"C	7	3#4 & 1#8 GRD – 1"C	70A	7N	3#4 & 1#8 GRD – 1"C	7	2#4 & 1#8 GRD – 1"C
8N	4#4 & 1#8 GRD – 1¼"C	8	3#4 & 1#8 GRD – 1"C	80A	8N	2#3 & 1#8 GRD – 1¼"C	8	2#3 & 1#8 GRD – 1¼"C
9N	4#3 & 1#8 GRD – 1¼"C	9	3#3 & 1#8 GRD – 1¼"C	90A	9N	3#3 & 1#8 GRD – 1¼"C	9	2#3 & 1#8 GRD – 1¼"C
10N	4#1 & 1#6 GRD – 1½"C	10	3#1 & 1#6 GRD – 1½"C	100A	10N	3#1 & 1#6 GRD – 1½"C	10	2#1 & 1#6 GRD – 1¼"C
12N	4#1 & 1#6 GRD – 1½"C	12	3#1 & 1#6 GRD – 1½"C	125A	12N	3#1 & 1#6 GRD – 1½"C	12	2#1 & 1#6 GRD – 1¼"C
15N	4#1/0 & 1#6 GRD – 2"C	15	3#1/0 & 1#6 GRD – 1½"C	150A	15N	3#1/0 & 1#6 GRD – 1½"C	15	2#1/0 & 1#6 GRD – 1¼"C
17N	4#2/0 & 1#6 GRD – 2"C	17	3#2/0 & 1#6 GRD – 2"C	175A	17N	3#2/0 & 1#6 GRD – 2"C	17	2#2/0 & 1#6 GRD – 1½"C
20N	4#3/0 & 1#6 GRD – 2"C	20	3#3/0 & 1#6 GRD – 2"C	200A	20N	3#3/0 & 1#6 GRD – 2"C	20	2#3/0 & 1#6 GRD – 1½"C
22N	4#4/0 & 1#4 GRD – 2½"C	22	3#4/0 & 1#4 GRD – 2"C	225A	22N	3#4/0 & 1#4 GRD – 2"C	22	2#4/0 & 1#4 GRD – 2"C
25N	4#250MCM & 1#4 GRD – 2½"C	25	3#250MCM & 1#4 GRD – 2½"C	250A	25N	3#250MCM & 1#4 GRD – 2½"C	25	2#250MCM & 1#4 GRD – 2"C
27N	4#300MCM & 1#4 GRD – 2½"C	27	3#300MCM & 1#4 GRD – 2½"C	275A	27N	3#300MCM & 1#4 GRD – 2½"C	27	2#300MCM & 1#4 GRD – 2"C
30N	4#350MCM & 1#4 GRD – 3"C	30	3#350MCM & 1#4 GRD – 3"C	300A	30N	3#350MCM & 1#4 GRD – 3"C	30	2#350MCM & 1#4 GRD – 2½"C
35N	4#500MCM & 1#3 GRD – 3½"C	35	3#500MCM & 1#3 GRD – 3½"C	350A	35N	3#500MCM & 1#3 GRD – 3½"C	35	2#500MCM & 1#3 GRD – 2½"C
40N	4#600MCM & 1#3 GRD – 4"C	40	3#600MCM & 1#3 GRD – 4"C	400A	40N	3#600MCM & 1#3 GRD – 4"C	40	2#600MCM & 1#3 GRD – 3"C
50N	TWO SETS 4#250MCM & 1#2 GRD – 3"C	50	TWO SETS 3#250MCM & 1#2 GRD – 2½"C	500A	50N	TWO SETS 3#250MCM & 1#2 GRD – 2½"C	50	TWO SETS 2#250MCM & 1#2 GRD – 2"C
60N	TWO SETS 4#350MCM & 1#1 GRD – 3"C	60	TWO SETS 3#350MCM & 1#1 GRD – 2½"C	600A	60N	TWO SETS 3#350MCM & 1#1 GRD – 2½"C	60	TWO SETS 2#350MCM & 1#1 GRD – 2½"C
70N	TWO SETS 4#500MCM & 1#1/0 GRD – 3½"C	70	TWO SETS 3#500MCM & 1#1/0 GRD – 3½"C	700A				
80N	TWO SETS 4#600MCM & 1#1/0 GRD – 4"C	80	TWO SETS 3#600MCM & 1#1/0 GRD – 4"C	800A				
120N	THREE SETS 4#600MCM & 1#3/0 GRD – 4"C	120	THREE SETS 3#600MCM & 1#3/0 GRD – 4"C	1200A				
160N	FOUR SETS 4#600MCM & 1#4/0 GRD – 4"C	160	FOUR SETS 3#600MCM & 1#4/0 GRD – 4"C	1600A				

NOTES

1 – UNLESS OTHERWISE INDICATED, CONDUCTOR SIZING SHALL MATCH THE SIZE INDICATED ABOVE FOR THE APPLICABLE OVERCURRENT DEVICE. PROVIDE LARGER CIRCUIT WHERE INDICATED.

2 – PROVIDE MINIMUM SIZE CONDUIT INDICATED IN THE SPECIFICATIONS OR ON THE DRAWINGS.

3 – MINIMUM SIZE CONDUIT UNDERGROUND IS ONE STANDARD ELECTRICAL SIZE LARGER THAN INDICATED IN THE SCHEDULE. PROVIDE LARGER CONDUIT WHERE SPECIFICALLY INDICATED OTHERWISE.

4 – PROVIDE TYPE OF RACEWAY OR CABLE AS INDICATED IN SPECIFICATION OR ON DRAWINGS.

GENERAL NOTES FOR GROUNDING AND BONDING

1 – IT IS INTENDED THAT ALL CODE REQUIRED GROUNDING AND BONDING OF EQUIPMENT SHALL BE EXECUTED IN ACCORDANCE WITH THE MASSACHUSETTS ELECTRIC CODE.

2 – THE GROUNDING/BONDING REQUIRED FOR THIS PROJECT SHALL INCLUDE, BUT NOT BE LIMITED TO THE FOLLOWING EQUIPMENT:

A – ELECTRIC SERVICE GROUND MINIMUM OF TWO(2) LOCATIONS FOR CONNECTION TO THE GROUNDING ELECTRODE.

B – BOND SWITCHBOARD NEUTRAL/GROUND TO LINE SIDE OF WATER MAIN.

C – ALL ELECTRIC SERVICE EQUIPMENT; ALL DISTRIBUTION EQUIPMENT INCLUDING SWITCHBOARDS, TRANSFORMERS, PANELBOARDS AND ALL OTHER ELECTRICAL APPURTENANCES SUCH AS DISCONNECT SWITCHES, STARTERS ETC.

D – ALL ELECTRICAL POWERED EQUIPMENT SPECIFIED UNDER OTHER SECTIONS OF THE CONTRACT INCLUDING HVAC AND PLUMBING EQUIPMENT.

E – AUDIO/VIDEO RACKS, VOICE RACKS, CABLE TV RACKS, DATA RACKS, CABLE TRAY AND ALL ASSOCIATED CABLES.

F – ROOF ANTENNAS.

G – EMERGENCY GENERATOR AND NATURAL GAS PIPING. INCLUDING THE BONDING OF THE NORMAL EMERGENCY SYSTEM POWER DISTRIBUTION EQUIPMENT.

H – EXTERIOR LIGHTS

I – GROUND BUILDING STEEL AND CONCRETE SLAB REBAR TO MAIN ELECTRIC SERVICE GROUND BUS.

J – PROPERLY GROUND ALL INCOMING TELEPHONE, DATA, AND CATV SERVICES.

K – FURNISH AND INSTALL A 1'-0" LONG ¼" THICK COPPER GROUND BUS IN ALL VOICE/DATA MDF ROOMS AND IDF CLOSETS. CONNECT EACH GROUND BUS TO THE ELECTRIC SERVICE GROUND BUS IN THE MAIN ELECTRIC ROOM WITH 1#6 AWG GROUND IN ½" CONDUIT.

L – AT EXPANSION JOINTS, PROVIDE BONDING JUMPER BETWEEN BUILDING STEEL TO ENSURE THAT THE ENTIRE STRUCTURE IS BONDED.

M – BONDING INCOMING GAS SERVICE TO BUILDING GROUND.

N – BOND ALL CABLE TRAYS.

O – BOND EACH END OF THE 4" CONDUITS BETWEEN THE MDF ROOM AND THE IDF ROOM.

3 – THE PRECEDING IS INTENDED AS A GUIDE ONLY AND DOES NOT ABSOLVE THE CONTRACTOR FROM PROVIDING ALL THE CODE REQUIRED GROUNDING AND BONDING FOR THIS PROJECT.

GENERAL NOTES

1 – ALL EMERGENCY ELECTRICAL SYSTEM ARTICLE 700 FEEDERS LOCATED OUTSIDE OF THE EMERGENCY ELECTRICAL ROOM SHALL HAVE A TWO (2) HOUR FIRE RATING. THE WIRING METHOD FOR EMERGENCY SYSTEM FEEDERS SHALL BE FIRE RATED, MINERAL INSULATED TYPE MI CABLE.

2 – BECAUSE OF THE MANY AREAS IN THE BUILDING THAT DO NOT HAVE CEILINGS, IT IS IMPERATIVE THAT ALL CONDUIT ROUTES IN AREAS THAT DO NOT HAVE CEILINGS BE REVIEWED WITH THE ARCHITECT BEFORE INSTALLATION. REFER TO GENERAL NOTE #3 ON DRAWING 10.0.01.

3 – FURNISH AND INSTALL AN INTEGRAL SERVICE ENTRANCE RATED SPD SURGE PROTECTION TYPE 1 SECTION IN SWITCHBOARD. SPD SHALL BE RATED FOR 320KA PEAK AMPACITY, 277/480-VOLT, WYE 3-PHASE. SPD SHALL BE FURNISHED WITH THERMAL 320KA CAPACITY, FAULT CURRENT FUSING, SINE WAVE TRACKING, LED/AUDIBLE ALARMS AND SHALL BE GENERAL ELECTRIC SPD OR APPROVED EQUAL.

4 – FURNISH AND INSTALL AN INTEGRAL SPD SURGE PROTECTION TYPE 2 DEVICE IN EACH PANEL. SPD DEVICE SHALL BE RATED AT 100KA PEAK AMPACITY, 120/208-VOLT, WYE, 3-PHASE. SPD SHALL BE FURNISHED WITH THERMAL FUSING, 100KA CAPACITY, FAULT CURRENT FUSING, SINE WAVE TRACKING, LED/AUDIBLE ALARMS AND SHALL BE GENERAL ELECTRIC SPD OR APPROVED EQUAL.

5 – GENERAL CONTRACTOR TO FURNISH AND INSTALL ALL REQUIRED CONCRETE PADS FOR PAD MOUNTED TRANSFORMERS, GENERATORS, SWITCHBOARD, PANELBOARDS, AND STEP DOWN TRANSFORMERS.

6 – IN MAIN ELECTRIC ROOM WITH SWITCHBOARD, ELECTRICAL CONTRACTOR SHALL FURNISH AND INSTALL ONE EXIT SIGN OVER EVERY EGRESS DOOR AND ANOTHER EXIT SIGN AT 1'-6" AFF NEXT TO EACH EGRESS DOOR. CONNECT EXIT SGNS TO EXIT SIGN EMERGENCY CIRCUIT WITH THE REQUIRED CONDUIT AND WIRE.

AMESBURY ELEMENTARY SCHOOL

AMESBURY, MA

DINISCO DESIGN
architects + planners
99 Chauncy Street, Suite 901
Boston, MA 02111
(617) 426-2858

DGT Associates
Surveying & Engineers
1071 Worcester Road
Framingham, MA 01701
(508) 879-0030

Brown Sardina, Inc.
Landscape Architects
24 Roland Street
Boston, MA 02129
(617) 482-4703

Foley Buhl Roberts & Assoc., Inc.
Structural Engineers
2150 Washington Street
Newton, MA 02462
(617) 527-9600

Crabtree McGrath Assoc., Inc.
Food Service Consultants
161 West Main Street
Georgetown, MA 01833
(978) 352-8500

VAV International, Inc.
Mechanical Engineers
400 West Cummings Park S. 4700
Woburn, MA 01801
(781) 935-7228

Thompson Engineering Company, Inc.
Electrical Engineers
89 Newbury Street, Suite 103
Danvers, MA 01923
(617) 866-9066

EdVance Technology Design, Inc.
Technology Consultants
300 Brickstone Square, Suite 201
Andover, MA 01880
(978) 256-9900

KEY PLAN

NORTH ARROW

STAMP

Date: 21 August 2020

Drawn By: **JM, TD, EG**

Scale: N.T.S.

Revisions

Number	Date	Description

90% COST ESTIMATE SET

Power Riser Diagram

10.3.01

© 2020 DiNisco Design

I:\18011 - Amesbury Elementary School\10.3.01.dwg / 8/14/2020 3:50:15 PM

SCHEDULE OF MAIN SECONDARY SWITCHBOARD

3000-AMP BUSSING 277/480-VOLTS 3-PHASE 4-WIRE WITH EQUIPMENT GROUND TERMINAL BUS 65,000 A.I.C.

POS. NO.	BREAKER FRAME-TRIP-POLE	PROTECTS FEEDER TO	CIRCUIT BREAKER GENERAL ELECTRIC CO OR APPROVED EQUAL
1		METERING OWNER ELECTRONIC MULTI-METER	--
2	3000/2500/3P	MAIN INSULATED CASE FIXED WITH LT, ST, I, GF CIRCUIT BREAKER WITH 120V SHUNT TRIP	SS
3		OWNER METERING TRANSFORMERS	--
4		ELECTRONIC POWER METER FOR MISCELLANEOUS	
5		ELECTRONIC POWER METER FOR LIGHTING	
6		ELECTRONIC POWER METER FOR HVAC	
7	600/500/3P	PANEL DP1 VIA 300KVA TRANSFORMER	SGL6
8	225/225/3P	SPARE	SFL
9	150/70/3P	20 HP ELEVATOR	SEL
10	400/300/3P	FUTURE PV	SGL4
11	400/300/3P	FUTURE BATTERY	SGL4
12	150/100/3P	SPARE	SEL
13	150/150/3P	SPACE & BUS	SEL
14	150/100/3P	LIGHTING PANEL LP1A	SEL
15	150/100/3P	LIGHTING PANEL LPGB	SEL
16	150/100/3P	OUTSIDE LIGHTING PANEL	OCP
17	150/100/3P	ELSDP1 VIA A.T.S.	SEL
18	150/100/3P	SPARE	SEL
19	150/100/3P	SPARE	SEL
20-21	150/--/3P	SPACE & BUS	SEL
22	400/300/3P	PANEL DP2 VIA 150KVA TRANSFORMER	SGL4
23	400/400/3P	PANEL PP1	SFL
24	400/400/3P	PANEL PP3	SFL
25	800/600/3P	PANEL SBDP1 VIA A.T.S.	SGL8
26	600/600/3P	CHILLER	SGL8
27	400/400/3P	--	SEL
28-30	250/250/3P	SPARES	SFL
31	250/--/3P	SPACE & BUS	SFL

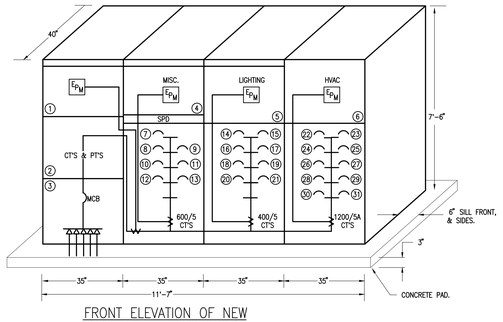

FRONT ELEVATION OF NEW SECONDARY SWITCHBOARD

N.T.S.

SWITCHBOARD NOTES

1 – NEUTRAL AND GROUND BUS SHALL RUN THE ENTIRE LENGTH OF SWITCHBOARD.

2 – ALL CONCRETE FLOORS INCLUDING CONCRETE PADS IN ALL ELECTRIC ROOMS SHALL BE SEALED PRIOR TO THE INSTALLATION OF THE SWITCHBOARD. THE SEALING OF THE CONCRETE FLOORS SHALL BE DONE BY THE CONCRETE SUBCONTRACTOR.

SWITCHBOARD LEGEND

— MAIN CIRCUIT BREAKER. REFER TO SPECIFICATIONS MANUALLY OPERATED.

15 — MOLDED CASE CIRCUIT BREAKER NUMERAL INDICATES POSITION NUMBER. REFER TO SCHEDULE.

SCHEDULE OF NORMAL DISTRIBUTION PANEL DP1

120/208-VOLTS 3-PHASE 4-WIRE 22,000 A.I.C.

EQUIPMENT GROUND TERMINAL BUS – INTEGRAL SPD – DOOR-IN-DOOR TRIM

POS. NO.	BREAKER FRAME-TRIP-POLE	PROTECTS FEEDER	CB TYPE GE OR APPROVED EQUAL
	1200/1200/3P	MAIN CIRCUIT BREAKER	SKHB
1	150/150/3P	PANEL CPGA	SEH
2	150/150/3P	PANEL CPGB	SEH
3	150/150/3P	PANEL CP1A	SEH
4	150/150/3P	PANEL CP1B	SEH
5	150/150/3P	PANEL CP2A	SEH
6	150/150/3P	PANEL RPGA	SEH
7	150/150/3P	PANEL RPGB	SEH
8	150/150/3P	PANEL RP1A	SEH
9	150/150/3P	PANEL RP1B	SEH
10	150/150/3P	PANEL RP2A	SEH
11	100/100/3P	SPARE	SEH
12	100/100/3P	SPARE	SEH
13	100/100/3P	SPARE	SEH
14	100/100/3P	SPARE	SEH

SCHEDULE OF NORMAL DISTRIBUTION PANEL DP2

120/208-VOLTS 3-PHASE 4-WIRE 22,000 A.I.C.

EQUIPMENT GROUND TERMINAL BUS – INTEGRAL SPD – DOOR-IN-DOOR TRIM

POS. NO.	BREAKER FRAME-TRIP-POLE	PROTECTS FEEDER	CB TYPE GE OR APPROVED EQUAL
	600/500/3P	MAIN CIRCUIT BREAKER	SGL6
1	150/150/3P	PANEL PP2	SEH
2	150/150/3P	PANEL PP4	SEH
3	150/150/3P	SPARE	SEH
4	150/150/3P	SPARE	SEH
5-10	100/40/2P	CAR CHARGING STATION	SEH
12	225/225/3P	PANEL KP1	SFL
13-14	100/100/3P	SPARES	SEL

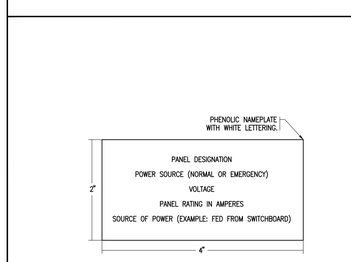

TYPICAL ELECTRICAL EQUIPMENT NAMEPLATE

N.T.S.

1 – FURNISH AND INSTALL ENGRAVED PHENOLIC NAMEPLATES ON ALL PANELBOARDS.

SCHEDULE OF STANDBY DISTRIBUTION PANEL SBDP1

277/480-VOLTS 3-PHASE 4-WIRE 65,000 A.I.C.

EQUIPMENT GROUND TERMINAL BUS – INTEGRAL SPD – DOOR-IN-DOOR TRIM

POS. NO.	BREAKER FRAME-TRIP-POLE	PROTECTS FEEDER	CB TYPE GE OR APPROVED EQUAL
	800/600/3P	MAIN CIRCUIT BREAKER	SGL8
1	400/300/3P	PANEL SBDP2 VIA 150KVA TRANSFORMER	SEL
2	150/150/3P	PANEL SPP1	SEL
3	225/225/3P	PANEL SPP3	SFL
4	100/20/3P	SPARE	SEL
5	100/20/3P	SPARE	SEL
6	100/20/3P	SPARE	SEL
7	100/20/3P	SPARE	SEL
8-14	100/--/3P	SPACE & BUS	SEL

SCHEDULE OF STANDBY DISTRIBUTION PANEL SBDP2

120/208-VOLTS 3-PHASE 4-WIRE 22,000 A.I.C.

EQUIPMENT GROUND TERMINAL BUS – INTEGRAL SPD – DOOR-IN-DOOR TRIM

POS. NO.	BREAKER FRAME-TRIP-POLE	PROTECTS FEEDER	CB TYPE GE OR APPROVED EQUAL
	400/400/3P	MAIN CIRCUIT BREAKER	SGL6
1-19	100/20/1P	RECEPTACLES	SEH
20	100/100/3P	PANEL EKP1	SEH
21	150/150/3P	PANEL SPTD1	SEH
22	100/100/3P	PANEL SPP2	SEH
23	100/100/3P	PANEL SPP4	SEH
24	100/100/3P	SPARE	SEH
25	100/20/1P	SPARE	SEH
26-32	100/20/1P	SPARES	SEH

SCHEDULE OF EMERG. LIFE SAFETY DISTRIBUTION PANEL ELSDP1

277/480-VOLTS 3-PHASE 4-WIRE 65,000 A.I.C.

EQUIPMENT GROUND TERMINAL BUS – INTEGRAL SPD – DOOR-IN-DOOR TRIM

POS. NO.	BREAKER FRAME-TRIP-POLE	PROTECTS FEEDER	CB TYPE GE OR APPROVED EQUAL
	100/100/3P	MAIN CIRCUIT BREAKER	SEL
1-22	100/20/1P	EMERGENCY LIGHTING	TEYL
23	100/30/3P	PANEL ELSDP2 VIA 15KVA TRANSFORMER	TEYL
24	100/30/3P	EMERGENCY OUTSIDE LIGHTING PANEL	TEYL
25-40	100/20/1P	SPARES	TEYL

SCHEDULE OF EMERG. LIFE SAFETY DISTRIBUTION PANEL ELSDP2

120/208-VOLTS 3-PHASE 4-WIRE 10,000 A.I.C.

EQUIPMENT GROUND TERMINAL BUS – INTEGRAL SPD – DOOR-IN-DOOR TRIM

POS. NO.	BREAKER FRAME-TRIP-POLE	PROTECTS FEEDER	CB TYPE GE OR APPROVED EQUAL
	100/60/3P	MAIN CIRCUIT BREAKER	TEYL
1	100/20/1P	FIRE ALARM CONTROL PANEL	TEYL
2-8	100/20/1P	FIRE ALARM EQUIPMENT	TEYL
9	100/20/1P	SPRINKLER BELL	TEYL
10	100/20/2P	GENERATOR BLOCK HEATER	TEYL
11	100/20/1P	GENERATOR BATTERY CHARGER	TEYL
12	100/20/1P	BDA	TEYL
13	100/20/1P	BDA DMP	TEYL
15	100/20/1P	PANEL ERP1A	TEYL
14-19	100/20/1P	SPARES	TEYL
20-29	100/--/1P	SPACE & BUS	--

SCHEDULE OF NORMAL COMPUTER PANELS

PANEL DESIG.	LOCATION	MOUNT	VOLTAGE	A.I.C RATING	MAINS BUS SIZE	MAINS MCB	NUMBER & CAPACITY OF CIRCUIT BREAKERS 1-POLE 15A	1-POLE 20A	1-POLE 30A	2-POLE 15A	2-POLE 20A	2-POLE 30A	3-POLE 15A	3-POLE 20A	3-POLE 30A	3-POLE 40A	3-POLE 50A	3-POLE 60A	3-POLE 80A	3-POLE 90A	3-POLE 100A	SPACE & BUS	TOTAL POLES	CB TYPE GE OR APPROVED EQUAL	NOTES
CPGA	GROUND FLOOR ELEC	SURF.	120/208V 3PH/4W	22K	225A	150A	--	42	--	--	--	--	--	--	--	--	--	--	--	--	--	--	42	THHQB	INTEGRAL SPD.
CPGB	MAIN ELEC	SURF.	120/208V 3PH/4W	22K	225A	150A	--	42	--	--	--	--	--	--	--	--	--	--	--	--	--	--	42	THHQB	INTEGRAL SPD.
CP1A	FIRST FLOOR ELEC	SURF.	120/208V 3PH/4W	22K	225A	150A	--	42	--	--	--	--	--	--	--	--	--	--	--	--	--	--	42	THHQB	INTEGRAL SPD.
CP1B	FIRST FLOOR ELEC	SURF.	120/208V 3PH/4W	22K	225A	150A	--	42	--	--	--	--	--	--	--	--	--	--	--	--	--	--	42	THHQB	INTEGRAL SPD.
CP2A	SECOND FLOOR ELEC	SURF.	120/208V 3PH/4W	22K	225A	150A	--	42	--	--	--	--	--	--	--	--	--	--	--	--	--	--	42	THHQB	INTEGRAL SPD.

SCHEDULE OF NORMAL & EMERGENCY POWER PANELS

PANEL DESIG.	LOCATION	MOUNT	VOLTAGE	A.I.C RATING	MAINS BUS SIZE	MAINS MCB	NUMBER & CAPACITY OF CIRCUIT BREAKERS 1-POLE 15A	1-POLE 20A	1-POLE 30A	2-POLE 15A	2-POLE 20A	2-POLE 30A	3-POLE 15A	3-POLE 20A	3-POLE 30A	3-POLE 40A	3-POLE 50A	3-POLE 60A	3-POLE 80A	3-POLE 90A	3-POLE 100A	SPACE & BUS	TOTAL POLES	CB TYPE GE OR APPROVED EQUAL	NOTES
RPGA	GROUND FLOOR ELEC	SURF.	120/208V 3PH/4W	22K	225A	150A	--	52	1	--	1	1	--	--	--	1	--	--	--	--	--	--	60	THHQB	-- --
RPGB	MAIN ELEC	SURF.	120/208V 3PH/4W	22K	225A	150A	--	56	--	--	1	1	--	--	--	--	--	--	--	--	--	--	60	THHQB	-- --
RP1A	FIRST FLOOR ELEC	SURF.	120/208V 3PH/4W	22K	225A	150A	--	42	--	--	--	--	--	--	--	--	--	--	--	--	--	--	42	THHQB	-- --
RP1B	FIRST FLOOR ELEC	SURF.	120/208V 3PH/4W	22K	225A	150A	--	56	--	--	1	1	--	--	--	--	--	--	--	--	--	--	60	THHQB	-- --
RP2A	SECOND FLOOR ELEC	SURF.	120/208V 3PH/4W	22K	225A	150A	--	56	--	--	1	1	--	--	--	--	--	--	--	--	--	--	60	THHQB	-- --
RPGC	CAFETERIA STORAGE	SURF	120/208V 3PH/4W	22K	225A	150A	--	56	--	--	1	1	--	--	--	--	--	--	--	--	--	--	60	THHQB	-- --

SCHEDULE OF NORMAL LIGHTING PANELS

PANEL DESIG.	LOCATION	MOUNT	VOLTAGE	A.I.C RATING	MAINS BUS SIZE	MAINS MCB	NUMBER & CAPACITY OF CIRCUIT BREAKERS 1-POLE 15A	1-POLE 20A	1-POLE 30A	2-POLE 15A	2-POLE 20A	2-POLE 30A	3-POLE 15A	3-POLE 20A	3-POLE 30A	3-POLE 40A	3-POLE 50A	3-POLE 60A	3-POLE 80A	3-POLE 90A	3-POLE 100A	SPACE & BUS	TOTAL POLES	CB TYPE GE OR APPROVED EQUAL	NOTES
LP1A	ELECTRIC ROOM	SURF.	277/480V 3PH/4W	65K	100A	100A	--	42	--	--	--	--	--	--	--	--	--	--	--	--	--	--	42	TEYL	-- --
LPGB	ELECTRIC ROOM	SURF.	277/480V 3PH/4W	65K	100A	100A	--	42	--	--	--	--	--	--	--	--	--	--	--	--	--	--	42	TEYL	-- --
OLP	ELECTRIC ROOM	SURF.	277/480V 3PH/4W	65K	100A	100A	--	42	--	--	--	--	--	--	--	--	--	--	--	--	--	--	42	TEYL	-- --

SCHEDULE OF NORMAL POWER PANELS

PANEL DESIG.	LOCATION	MOUNT	VOLTAGE	A.I.C RATING	MAINS BUS SIZE	MAINS MCB	NUMBER & CAPACITY OF CIRCUIT BREAKERS 1-POLE 15A	1-POLE 20A	1-POLE 30A	2-POLE 15A	2-POLE 20A	2-POLE 30A	2-POLE 40A	3-POLE 20A	3-POLE 30A	3-POLE 40A	3-POLE 50A	3-POLE 60A	3-POLE 80A	3-POLE 90A	3-POLE 100A	SPACE & BUS	TOTAL POLES	CB TYPE GE OR APPROVED EQUAL	NOTES
PP1	SERVICES	SURF.	277/480 3PH/4W	65K	400A	400A	--	--	--	2	1	2	2	1	--	2	2	2	2	2	--	42	SEL	FGHFGHFGH
PP2	SERVICES	SURF.	120/208V 3PH/4W	22K	150A	150A	--	26	--	--	2	--	--	1	1	--	1	1	--	--	--	42	THHQB	-- --
PP3	ELEC 225E	SURF.	277/480 3PH/4W	65K	400A	400A	--	--	--	8	2	--	1	1	1	1	--	--	--	--	--	42	SEL	-- --
PP4	ELEC 225E	SURF.	120/208V 3PH/4W	22K	150A	150A	--	31	--	--	2	--	--	--	1	2	--	--	--	--	--	42	THHQB	-- --
KP1	KITCHEN	REC.	120/208V 3PH/4W	REFER TO PANEL SCHEDULE ON ENLARGED KITCHEN ELECTRICAL PLAN, DWG 10.2.26.																					

SCHEDULE OF STANDBY POWER PANELS

PANEL DESIG.	LOCATION	MOUNT	VOLTAGE	A.I.C RATING	MAINS BUS SIZE	MAINS MCB	NUMBER & CAPACITY OF CIRCUIT BREAKERS 1-POLE 30A	1-POLE 20A	1-POLE 25A	2-POLE 25A	2-POLE 20A	2-POLE 30A	3-POLE 15A	3-POLE 20A	3-POLE 30A	3-POLE 40A	3-POLE 50A	3-POLE 60A	3-POLE 80A	3-POLE 90A	3-POLE 100A	SPACE & BUS	TOTAL POLES	CB TYPE GE OR APPROVED EQUAL	NOTES
SPP1	SERVICES	SURF.	277/480 3PH/4W	65K	225A	225A	--	--	--	--	--	--	--	10	2	--	--	2	--	--	--	--	42	SEL	-- --
SPP2	SERVICES	SURF.	120/208V 3PH/4W	10K	100A	100A	--	12	2	--	--	--	--	1	--	1	--	--	--	--	--	10	30	THHQB	-- --
SPP3	ELEC	SURF.	277/480 3PH/4W	65K	225A	225A	--	--	--	--	--	--	8	--	4	--	2	--	--	--	--	--	42	SEL	-- --
SPP4	ELEC	SURF.	120/208V 3PH/4W	22K	100A	100A	--	12	--	2	6	--	--	--	--	--	--	--	--	--	--	10	30	THHQB	-- --
SPP6	CAFETERIA STORAGE	SURF.	120/208V 3PH/4W	22K	100A	100A	--	12	--	2	6	--	--	--	--	--	--	--	--	--	--	10	30	THHQB	-- --
SPTD1	NETWORK	SURF.	120/208V 3PH/4W	10K	150A	150A	16	36	--	--	--	4	--	--	--	--	--	--	--	--	--	--	60	THHQB	INTEGRAL SPD.
EKP1	KITCHEN	REC.	120/208V 3PH/4W	REFER TO PANEL SCHEDULE ON ENLARGED KITCHEN ELECTRICAL PLAN, DWG 10.2.26.																					

SCHEDULE OF EMERGENCY LIGHTING PANELS

PANEL DESIG.	LOCATION	MOUNT	VOLTAGE	A.I.C RATING	MAINS BUS SIZE	MAINS MCB	NUMBER & CAPACITY OF CIRCUIT BREAKERS 1-POLE 15A	1-POLE 20A	1-POLE 30A	2-POLE 15A	2-POLE 20A	2-POLE 30A	3-POLE 15A	3-POLE 20A	3-POLE 30A	3-POLE 40A	3-POLE 50A	3-POLE 60A	3-POLE 80A	3-POLE 90A	3-POLE 100A	SPACE & BUS	TOTAL POLES	CB TYPE GE OR APPROVED EQUAL	NOTES
ELOP	EMERGENCY ELECTRIC ROOM	SURF.	277/480V 3PH/4W	65K	100A	100A	--	42	--	--	--	--	--	--	--	--	--	--	--	--	--	--	42	TEYL	-- --

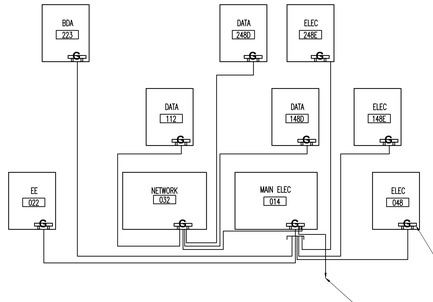

ELECTRIC & VOICE/DATA ROOM GROUNDING BUSBAR WIRING DIAGRAM

N.T.S.

NOTES

1 – FURNISH AND INSTALL AN INSULATED 12"X 2"X ¼" COPPER GROUND BUS ON THE PLYWOOD BACKBOARD IN ALL IDF, MDF, AND ELECTRIC ROOMS. ALL ELECTRICAL EQUIPMENT SHALL BE BONDED TO THE GROUND BUS AS REQUIRED. REFER TO DETAIL, TYPICAL.

2 – FURNISH AND INSTALL A #3 GROUND CONDUCTOR – 1" CONDUIT FROM EACH ELECTRIC ROOM GROUND BUS TO THE MAIN ELECTRIC GROUND BUS.

3 – FURNISH AND INSTALL A #6 GROUND CONDUCTOR – ¾" CONDUIT FROM EACH IDF ROOM GROUND BUS TO THE NETWORK MDF ROOM GROUND BUS.

4 – ALL EQUIPMENT RACKS FOR THE DATA NETWORK, TELECOMMUNICATIONS AND CABLE TV SYSTEM SHALL BE BONDED TO THE GROUND BUS WITH A #8 GROUND CONDUCTORS – ¾" CONDUIT. REFER TO DETAIL, TYPICAL.

EQUIPMENT SCHEDULE NOTES

1 – ELECTRICAL CONTRACTOR TO FURNISH AND INSTALL THERMAL SWITCHES, DISCONNECT SWITCHES (FUSED OR NOT FUSED), STARTERS, AND COMBINATION STARTERS AS SHOWN ON THIS SCHEDULE. VFD'S FURNISHED BY HVAC, INSTALLED AND WIRED BY ELECTRICAL.

2 – CONNECT TO ALL HVAC UNIT LIGHTS AND RECEPTACLES IN EACH HVAC UNIT COMPARTMENT.

3 – ELECTRICAL CONTRACTOR TO COORDINATE HOA OR START-STOP CONTROLS WITH ATC CONTRACTOR FOR ALL STARTERS PROVIDED BY THE ELECTRICAL CONTRACTOR.

4 – REFER TO BRANCH CIRCUIT AND FEEDER SCHEDULES DWG 10.3.01.

5 – PROVIDE RECEPTACLE FOR CONDENSATE PUMP. CONNECT RECEPTACLE TO FCU CIRCUIT.

6 – ELECTRICAL CONTRACTOR TO FURNISH AND INSTALL SHUTOFF SWITCHES FOR ALL BOILERS AND WATER HEATERS OUTSIDE ALL EGRESS DOORS TO MECHANICAL ROOM. SWITCH TO BE INSTALLED AT 76" AFF. SWITCH TO BE FURNISHED WITH RED DEVICE PLATE AND LABEL TO INDICATE EQUIPMENT BEING SHUT OFF. FURNISH AND INSTALL SHUNT TRIP CIRCUIT BREAKERS.

SCHEDULE OF ELECTRICAL RECORDING METERS

METERS	LOAD	FEEDERS MONITORED	METER LOCATION	CT LOCATION	SIZE	DATA CONNECTION
1	MAIN	SWBD	MAIN ELEC RM	SWBD CT ON MAIN BUS	2500A	BMS-CAT6 TO MDF
2	LIGHTING	LP1A, LPGB ELSDP1	MAIN ELEC RM	SWBD CT ON LP1A, LPGB & ELSDP1 FEEDERS	200A	BMS-CAT6 TO MDF
3	MISC/RECEPTACLES	DP1	MAIN ELEC RM	SWBD CT ON DP1, ELEVATOR FEEDERS	800A	BMS-CAT6 TO MDF
4	HVAC – COOLING	CH-1	MAIN ELEC RM	SWBD CT ON CHILLER FEEDERS	800A	BMS-CAT6 TO MDF
5	HVAC	PP1, PP3	MAIN ELEC RM	SWBD CT ON PP1, PP3 FEEDERS	400A	BMS-CAT6 TO MDF
6	HVAC	PP2, PP4	MAIN ELEC RM	DP2 CT ON PP2, PP4 FEEDERS	400A	BMS-CAT6 TO MDF
7	HVAC	SPP1, SPP3	MAIN ELEC RM	SBDP1 CT ON SPP1, SPP3 FEEDERS	400A	BMS-CAT6 TO MDF
8	HVAC	SPP2, SPP4	MAIN ELEC RM	SBDP2 CT ON SPP2, SPP4 FEEDERS	800A	BMS-CAT6 TO MDF
9	KITCHEN	KP1	MAIN ELEC RM	SBDP2 CT ON KP1 FEEDERS	400A	BMS-CAT6 TO MDF
10	KITCHEN	EKP1	MAIN ELEC RM	SWBD CT ON KP2 FEEDERS	400A	BMS-CAT6 TO MDF
11	TECHNOLOGY	SPTD1	MAIN ELEC RM	SBDP2 CT ON SPTD1 FEEDER	200A	BMS-CAT6 TO MDF
12	RECEPTACLES	DP1	MAIN ELEC RM	SWBD CT ON DP1	1200A	BMS-CAT6 TO MDF
13	OUTSIDE LIGHTING	OLP	MAIN ELEC RM	OLP	100A	BMS-CAT6 TO MDF
14	EMERGENCY OUTSIDE LIGHTING	EOLP	EMERGENCY ELEC RM	EOLP	100A	BMS-CAT6 TO MDF

METERING NOTES

1 – RECORDING METER FOR KWH, KW DEMAND. FURNISH AND INSTALL METER WITH CURRENT TRANSFORMER ON FEEDER. PROVIDE BACNET SOFTWARE OPTION, AND A CAT6 DATA CABLE TO BMS SYSTEM. EMON DMON SERIES 5000 OR APPROVED EQUAL. FURNISH AND INSTALL ALL METERS LISTED ABOVE. TYPICAL.

AMESBURY ELEMENTARY SCHOOL

AMESBURY, MA

DINISCO DESIGN architects + planners

99 Chauncy Street, Suite 901
Boston, MA 02111
(617) 426-2858

DGT Associates
Surveying & Engineers
1071 Worcester Road
Framingham, MA 01701
(508) 879-0030

Brown Sardina, Inc.
Landscape Architects
24 Roland Street
Boston, MA 02129
(617) 482-4703

Foley Buhl Roberts & Assoc., Inc.
Structural Engineers
2150 Washington Street
Newton, MA 02462
(617) 527-9600

Crabtree McGrath Assoc., Inc.
Food Service Consultants
161 West Main Street
Georgetown, MA 01833
(978) 352-8500

VAV International, Inc.
Mechanical Engineers
400 West Cummings Park S. 4700
Woburn, MA 01801
(781) 935-7228

Thompson Engineering Company, Inc.
Electrical Engineers
89 Newbury Street, Suite 103
Danvers, MA 01923
(617) 866-9066

EdVance Technology Design, Inc.
Technology Consultants
300 Brickstone Square, Suite 201
Andover, MA 01880
(978) 256-9900

KEY PLAN

NORTH ARROW STAMP

Date: 21 August 2020

Drawn By: JM, TD, EG

Scale: N.T.S.

Revisions

Number	Date	Description

90% COST ESTIMATE SET

Panel Schedules

10.3.02

© 2020 DiNisco Design

I:\18021 - Amesbury Elementary School\10.3.02\10.3.02.dwg 8/4/2020 3:50:22 PM

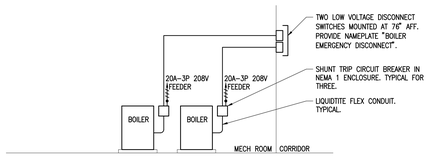

BOILER WIRING DIAGRAM

N.T.S.

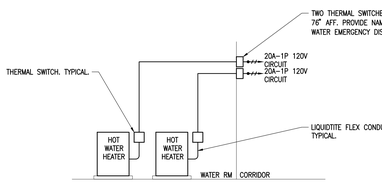

HOT WATER HEATER WIRING DIAGRAM

N.T.S.

SCHEDULE OF MECHANICAL EQUIPMENT

TAG NAME	DESCRIPTION	ROOM NUMBER	HP/FLA	VOLT	PH	EMER PWR	PANEL	CIRCUIT #	CIRCUIT BREAKER	FEEDER	CONNECTIONS $	CONNECTIONS □	CONNECTIONS F	CONNECTIONS S	CONNECTIONS S	CONNECTIONS VFD	REMARKS
MAU-1 1B	MAKEUP AIR UNIT LIGHTS & RECEPTACLES	WORKSHOP 019	--	120	1		--	--	20A/1P	2	✓						--
P-1	PUMP	MECH 015	1.86HP	208	1	✓	--	--	20A/2P	2			✓			✓	--
P-2	PUMP	MECH 015	1.86HP	208	1	✓	--	--	20A/2P	2			✓			✓	--
P-3	PUMP	MECH 015	15HP	480	3	✓	--	--	45A/3P	5			✓			✓	--
P-4	PUMP	MECH 015	15HP	480	3	✓	--	--	45A/3P	5			✓			✓	--
P-5	PUMP	MECH 015	30HP	480	3		--	--	40A/3P	4			✓			✓	--
P-6	PUMP	MECH 015	30HP	480	3		--	--	40A/3P	4			✓			✓	--
P-7	PUMP	MECH 015	7.5HP	480	3		--	--	30A/3P	3			✓			✓	--
P-8	PUMP	MECH 015	7.5HP	480	3		--	--	30A/3P	3			✓			✓	--
HWP-1	HOT WATER RECIRC PUMP	MECH 015	1/3HP	120	1	✓	--	--	20A/1P	2	✓						--
RTU-1A	ROOF TOP UNIT	ROOF – SERVES ADMIN	28.6MCA	480	3	✓	--	--	35A/3P	5			✓		✓		NOTE #3
RTU-1B	ROOF TOP UNIT LIGHTS & RECEPTACLES	ROOF – SERVES ADMIN	--	120	1		--	--	20A/1P	2			✓		✓		NOTE #3,4
SP-1	SUMP PUMP	ELEVATOR PIT	1/2HP	120	1	✓	--	--	20A/1P	2	✓						--
VAV A-1	VAV UNIT	MUSIC 130	--	120	1	✓	--	--	20A/1P	2	✓						--
VAV A-2	VAV UNIT	MUSIC 130	--	120	1	✓	--	--	20A/1P	2	✓						--
VAV B-1	VAV UNIT	ADMIN 105	--	120	1	✓	--	--	20A/1P	2	✓						--
VAV B-2	VAV UNIT	ADMIN 107A	--	120	1	✓	--	--	20A/1P	2	✓						--
VAV C-1	VAV UNIT	ADMIN 110	--	120	1	✓	--	--	20A/1P	2	✓						--
VAV C-2	VAV UNIT	ADMIN 104	--	120	1	✓	--	--	20A/1P	2	✓						--
VAV E-1	VAV UNIT	ADMIN 106	--	120	1	✓	--	--	20A/1P	2	✓						--
VAV E-2	VAV UNIT	ADMIN 107	--	120	1	✓	--	--	20A/1P	2	✓						--
VAV V1-1	VAV UNIT	ADMIN 103	--	120	1	✓	--	--	20A/1P	2	✓						--
VAV V1-2	VAV UNIT	ADMIN C113	--	120	1	✓	--	--	20A/1P	2	✓						--
VAV V2-1	VAV UNIT	TSN 131	--	120	1	✓	--	--	20A/1P	2	✓						--
SP-1	SITE SEWAGE EJECTION PUMP	SITE – NEW SEWER PUMP STA.	--	480	3	✓	SBDP1	--	20A/3P	5	✓						REFER TO SEWAGE PUMP STA. NOTES, DWG 10.1.02
SP-2	SITE SEWAGE EJECTION PUMP	SITE – EXISTING SEWER PUMP STA.	--	480	3	✓	SBDP1	--	20A/3P	6	✓						REFER TO SEWAGE PUMP STA. NOTES, DWG 10.1.02

MECHANICAL EQUIPMENT SCHEDULE NOTES

1 – ELECTRICAL CONTRACTOR TO FURNISH AND INSTALL THERMAL SWITCHES, DISCONNECT SWITCHES (FUSED OR NOT FUSED), STARTERS, AND COMBINATION STARTERS AS SHOWN ON THIS SCHEDULE. VFD'S FURNISHED BY HVAC, INSTALLED AND WIRED BY ELECTRICAL.

2 – ELECTRICAL CONTRACTOR TO COORDINATE H/A OR START–STOP CONTROLS WITH ATC CONTRACTOR FOR ALL STARTERS PROVIDED BY THE ELECTRICAL CONTRACTOR.

3 – ALL EXTERIOR MOUNTED ELECTRICAL CONNECTIONS SHALL BE NEMA 3R WEATHERPROOF HOUSING.

4 – CONNECT TO ALL HVAC UNIT LIGHTS AND RECEPTACLES IN EACH HVAC UNIT COMPARTMENT.

5 – PROVIDE RECEPTACLE FOR CONDENSATE PUMP. CONNECT RECEPTACLE TO FCU/AC UNIT CIRCUIT.

6 – ELECTRICAL CONTRACTOR TO FURNISH AND INSTALL SHUTOFF SWITCHES FOR ALL BOILERS AND WATER HEATERS OUTSIDE ALL EGRESS DOORS TO MECHANICAL ROOM. SWITCH TO BE INSTALLED AT 76" AFF. SWITCH TO BE FURNISHED WITH RED DEVICE PLATE AND LABEL TO INDICATE EQUIPMENT BEING SHUT OFF. FURNISH AND INSTALL SHUNT TRIP CIRCUIT BREAKERS.

7 – VAV POWER. ELECTRICAL CONTRACTOR TO FURNISH AND INSTALL TWO OUTLET BOXES WITH A DEDICATED 120V CIRCUIT ABOVE AN ACCESSIBLE ACT CEILING AT EACH VAV POWER LOCATION. ONE OUTLET BOX WITH A THERMAL DISCONNECT SWITCH AND 120V CIRCUIT AND THE SECOND ADJACENT TO THE FIRST BOX WITH THE 120V CIRCUIT FOR USE BY THE BMS CONTRACTOR. BMS CONTRACTOR TO PROVIDE CLASS 2 TRANSFORMER. ELECTRICAL CONTRACTOR TO INSTALL AND MAKE FINAL CONNECTIONS (120V AND 24V) AT TRANSFORMER. BMS CONTRACTOR TO FURNISH AND INSTALL LOW VOLTAGE WIRING FROM VAV POWER OUTLET BOX TO VAV.

8 – REFER TO BRANCH CIRCUIT AND FEEDER SCHEDULES DWG 10.3.01.

SCHEDULE OF MOTORIZED EQUIPMENT

TAG NAME	DESCRIPTION	ROOM NUMBER	HP/FLA	VOLT	PH	EMER PWR	PANEL	CIRCUIT #	CIRCUIT BREAKER	FEEDER	CONNECTIONS $	CONNECTIONS □	CONNECTIONS F	CONNECTIONS S	CONNECTIONS S	CONNECTIONS VFD	REMARKS
BB-1	BASKETBALL BLACKBOARD	GYMNASIUM 114	1	120	1		--	--	20A/1P	2							PROVIDE TWIST LOCK RECEPTACLE --
BB-2	BASKETBALL BLACKBOARD	GYMNASIUM 114	1	120	1		--	--	20A/1P	2							PROVIDE TWIST LOCK RECEPTACLE --
BB-3	BASKETBALL BLACKBOARD	GYMNASIUM 114	1	120	1		--	--	20A/1P	2							PROVIDE TWIST LOCK RECEPTACLE --
BB-4	BASKETBALL BLACKBOARD	GYMNASIUM 114	1	120	1		--	--	20A/1P	2							PROVIDE TWIST LOCK RECEPTACLE --
BB-5	BASKETBALL BLACKBOARD	GYMNASIUM 114	1	120	1		--	--	20A/1P	2							PROVIDE TWIST LOCK RECEPTACLE --
BB-6	BASKETBALL BLACKBOARD	GYMNASIUM 114	1	120	1		--	--	20A/1P	2							PROVIDE TWIST LOCK RECEPTACLE --
DC-1	GYM DIVIDER CURTAIN	GYMNASIUM 114	1	120	1		--	--	20A/1P	2		✓					PROVIDE TWIST LOCK RECEPTACLE --
K-1	KILN (FURNITURE)	KILN STRG	11kW	208	3		--	--	50A/3P	5		✓					PROVIDE RECEPT. REFER TO DETAIL, DWG 10.3.12.
PS-1	MOTORIZED PROJECTION SCREEN	PLATFORM 003	1A	120	1		--	--	20A/1P	2	✓						INSTALL AND WIRE CONTROL STATION
PS-2	MOTORIZED PROJECTION SCREEN – WALL MOUNTED	GYMNASIUM 114	1A	120	1		--	--	20A/1P	2	✓						INSTALL AND WIRE CONTROL STATION
MC-1	MOTORIZED CURTAIN	PLATFORM 003	½	120	1		--	--	20A/1P	2	✓						INSTALL AND WIRE CONTROL STATION
MC-2	MOTORIZED CURTAIN	PLATFORM 003	½	120	1		--	--	20A/1P	2	✓						INSTALL AND WIRE CONTROL STATION
MRDL-1	MOTORIZED ROLL-UP DOOR	RECYCLE RM 009	1	208	3		--	--	20A/3P	2		✓					INSTALL AND WIRE CONTROL STATION

SCHEDULE OF MECHANICAL EQUIPMENT

TAG NAME	DESCRIPTION	ROOM NUMBER	HP/FLA	VOLT	PH	EMER PWR	PANEL	CIRCUIT #	CIRCUIT BREAKER	FEEDER	CONNECTIONS $	CONNECTIONS □	CONNECTIONS F	CONNECTIONS S	CONNECTIONS S	CONNECTIONS VFD	REMARKS
AC-1	SPLIT SYSTEM INDOOR AC UNIT	MAIN ELECTRIC ROOM 014	1MCA	208	1		--	--	20A/2P	2	✓						CONNECT TO ACCU-1
AC-2	SPLIT SYSTEM INDOOR AC UNIT	MAIN ELECTRIC ROOM 014	1MCA	208	1	✓	--	--	20A/2P	2	✓						CONNECT TO ACCU-2
AC-3	SPLIT SYSTEM INDOOR AC UNIT	NETWORK MDF 032	1MCA	208	1	✓	--	--	20A/2P	2	✓						CONNECT TO ACCU-3
AC-4	SPLIT SYSTEM INDOOR AC UNIT	NETWORK MDF 032	1MCA	208	1	✓	--	--	20A/2P	2	✓						CONNECT TO ACCU-4
AC-5	SPLIT SYSTEM INDOOR AC UNIT	DATA 112	1MCA	208	1	✓	--	--	20A/2P	2	✓						CONNECT TO ACCU-5
AC-6	SPLIT SYSTEM INDOOR AC UNIT	DATA 148D	1MCA	208	1	✓	--	--	20A/2P	2	✓						CONNECT TO ACCU-6
AC-7	SPLIT SYSTEM INDOOR AC UNIT	DATA 248B	1MCA	208	1	✓	--	--	20A/2P	2	✓						CONNECT TO ACCU-7
AC-8	SPLIT SYSTEM INDOOR AC UNIT	ECR 021	1MCA	208	1	✓	--	--	20A/2P	2	✓						CONNECT TO ACCU-8
ACCU-1	AC CONDENSING UNIT	ROOF – SERVES ELECTRIC 014	19MCA	208	1		--	--	25A/2P	4		✓					NOTE #3
ACCU-2	AC CONDENSING UNIT	ROOF – SERVES ELECTRIC 014	19MCA	208	1	✓	--	--	25A/2P	4		✓					NOTE #3
ACCU-3	AC CONDENSING UNIT	ROOF – SERVES NETWORK 032	19MCA	208	1	✓	--	--	25A/2P	4		✓					NOTE #3
ACCU-4	AC CONDENSING UNIT	ROOF – SERVES NETWORK 032	19MCA	208	1	✓	--	--	25A/2P	4		✓					NOTE #3
ACCU-5	AC CONDENSING UNIT	ROOF – SERVES DATA 112	19MCA	208	1	✓	--	--	25A/2P	4		✓					NOTE #3
ACCU-6	AC CONDENSING UNIT	ROOF – SERVES DATA 148D	19MCA	208	1	✓	--	--	25A/2P	4		✓					NOTE #3
ACCU-7	AC CONDENSING UNIT	ROOF – SERVES DATA 248B	19MCA	208	1	✓	--	--	25A/2P	4		✓					NOTE #3
ACCU-8	AC CONDENSING UNIT	ROOF – SERVES ECR 021	11MCA	208	1	✓	--	--	25A/2P	4		✓					NOTE #3
AHU-1A	AIR HANDLING UNIT SUPPLY FAN	ROOF – SERVES GYMNASIUM	27.2MCA	480	3	✓	--	--	35A/3P	5		✓				✓	NOTE #3
AHU-1B	AIR HANDLING UNIT RETURN FAN	ROOF – SERVES GYMNASIUM	13.7MCA	480	3	✓	--	--	15A/3P	3		✓				✓	NOTE #3
AHU-1C	AIR HANDLING UNIT LIGHTS & RECEPTACLES	ROOF – SERVES GYMNASIUM	--	120	1		--	--	20A/1P	2	✓						NOTE #3,4
AHU-2A	AIR HANDLING UNIT SUPPLY FAN	ROOF – SERVES CAFETERIA	27.2MCA	480	3	✓	--	--	35A/3P	5		✓				✓	NOTE #3
AHU-2B	AIR HANDLING UNIT RETURN FAN	ROOF – SERVES CAFETERIA	10.1MCA	480	3	✓	--	--	15A/3P	3		✓				✓	NOTE #3
AHU-2C	AIR HANDLING UNIT LIGHTS & RECEPTACLES	ROOF – SERVES CAFETERIA	--	120	1		--	--	20A/1P	2	✓						NOTE #3,4
AHU-3A	AIR HANDLING UNIT SUPPLY FAN	ROOF – SERVES MEDIA CENTER	27.2MCA	480	3	✓	--	--	35A/3P	5		✓				✓	NOTE #3
AHU-3B	AIR HANDLING UNIT RETURN FAN	ROOF – SERVES MEDIA CENTER	13.7MCA	480	3	✓	--	--	15A/3P	3		✓				✓	NOTE #3
AHU-3C	AIR HANDLING UNIT LIGHTS & RECEPTACLES	ROOF – SERVES MEDIA CENTER	--	120	1		--	--	20A/1P	2	✓						NOTE #3,4
B-1	BOILER (GAS)	MECH 012	16MCA	120	1	✓	--	--	20A/1P	2	✓						NOTE #6
B-2	BOILER (GAS)	MECH 012	16MCA	120	1	✓	--	--	20A/1P	2	✓						NOTE #6
CH-1	CHILLER	ROOF – SERVES BUILDING	532MCA	480	3		SWBD	--	600A/3P	60		✓					NOTE #3
DBF-1	DRYER BOOSTER FAN	RECYCLING TRASH 013	64.8W	120	1		--	--	20A/1P	2	✓						--
DWH-1	DOMESTIC WATER HEATER (GAS)	MECH 012	13A	120	1	✓	--	--	20A/1P	2	✓						NOTE #6
DWH-2	DOMESTIC WATER HEATER (GAS)	MECH 012	13A	120	1	✓	--	--	20A/1P	2	✓						NOTE #6
EF-1	TOILET EXHAUST	ROOF – SERVES TOILET	1HP	120	1		--	--	20A/1P	2	✓						NOTE #3
EF-2	KILN EXHAUST	ROOF – SERVES KILN	1/2HP	120	1		--	--	20A/1P	2	✓						NOTE #3
EF-3	EXHAUST FAN	EE 022	47.0W	120	1		--	--	20A/1P	2	✓						--
ERU-1A	ENERGY RECOVERY UNIT SUPPLY FAN	ROOF – SERVES CLASSROOM	30MCA	480	3	✓	--	--	40A/3P	5		✓				✓	NOTE #3
ERU-1B	ENERGY RECOVERY UNIT EXHAUST FAN	ROOF – SERVES CLASSROOM	23.5FLA	480	3	✓	--	--	40A/3P	5		✓				✓	NOTE #3
ERU-1C	ENERGY RECOVERY UNIT LIGHTS & RECEPTACLES	ROOF – SERVES CLASSROOM	--	120	1		--	--	20A/1P	2	✓						NOTE #3,4
ERU-1D	ENERGY RECOVERY UNIT HEAT WHEEL	ROOF – SERVES CLASSROOM	1/2HP	480	3	✓	--	--	20A/3P	2	✓						NOTE #3
ERU-2A	ENERGY RECOVERY UNIT SUPPLY FAN	ROOF – SERVES CLASSROOM	30FLA	480	3	✓	--	--	40A/3P	5		✓				✓	NOTE #3
ERU-2B	ENERGY RECOVERY UNIT EXHAUST FAN	ROOF – SERVES CLASSROOM	23.5FLA	480	3	✓	--	--	40A/3P	5		✓				✓	NOTE #3
ERU-2C	ENERGY RECOVERY UNIT LIGHTS & RECEPTACLES	ROOF – SERVES CLASSROOM	--	120	1		--	--	20A/1P	2	✓						NOTE #3,4
ERU-2D	ENERGY RECOVERY UNIT HEAT WHEEL	ROOF – SERVES CLASSROOM	1/2HP	480	3	✓	--	--	20A/3P	2	✓						NOTE #3
EWH-1KW	ELECTRIC UNIT HEATER	SPRINKLER 016	3KW	480	3	✓	--	--	20A/3P	2		✓					--
EWH-.5KW	ELECTRIC WALL HEATER	TOILET 044A	.5KW	120	1	✓	--	--	20A/1P	2		✓					--
EWH-.75KW	ELECTRIC WALL HEATER	NURSE TOILET 170B	.75KW	120	1	✓	--	--	20A/1P	2		✓					--
EWH-.75KW	ELECTRIC WALL HEATER	CUST 224	.75KW	120	1		--	--	20A/1P	2		✓					--
EWH-1.5KW	ELECTRIC WALL HEATER	DRY STORAGE 006	1.5KW	120	1		--	--	20A/1P	2		✓					--
EWH-4KW	ELECTRIC WALL HEATER	--	4KW	480	3		--	--	20A/3P	2		✓					--
FCU-1	FAN COIL UNIT	STOR 036	15.3MCA	120	1	✓	--	--	20A/1P	2	✓						NOTE #5
FCU-1	FAN COIL UNIT	STAFF 038B	15.3MCA	120	1	✓	--	--	20A/1P	2	✓						NOTE #5
FCU-1	FAN COIL UNIT	GIRLS 136G	15.3MCA	120	1	✓	--	--	20A/1P	2	✓						NOTE #5
FCU-1	FAN COIL UNIT	TOILET 137	15.3MCA	120	1	✓	--	--	20A/1P	2	✓						NOTE #5
FCU-1	FAN COIL UNIT	GIRLS 236G	15.3MCA	120	1	✓	--	--	20A/1P	2	✓						NOTE #5
FCU-1	FAN COIL UNIT	TOILET 237	15.3MCA	120	1	✓	--	--	20A/1P	2	✓						NOTE #5
FCU-2	FAN COIL UNIT	OFFICE 010	1.3FLA	120	1	✓	--	--	20A/1P	2	✓						NOTE #5
FCU-3	FAN COIL UNIT	STOR 017	1.5FLA	120	1	✓	--	--	20A/1P	2	✓						NOTE #5
FCU-3	FAN COIL UNIT	PE OFFICE 115	1.5FLA	120	1	✓	--	--	20A/1P	2	✓						NOTE #5
FCU-4	FAN COIL UNIT	VEST 001	1.9FLA	120	1	✓	--	--	20A/1P	2	✓						NOTE #5
FCU-5	FAN COIL UNIT	CORR C002	2.4FLA	120	1	✓	--	--	20A/1P	2	✓						NOTE #5
FCU-5	FAN COIL UNIT	VEST 101	2.4FLA	120	1	✓	--	--	20A/1P	2	✓						NOTE #5
FCU-5	FAN COIL UNIT	CORR C102	2.4FLA	120	1	✓	--	--	20A/1P	2	✓						NOTE #5
FCU-10	FAN COIL UNIT	CORR C202	3.9FLA	120	1	✓	--	--	20A/1P	2	✓						NOTE #5
FCU-11	FAN COIL UNIT	UPPER LOBBY C201	3.9FLA	120	1	✓	--	--	20A/1P	2	✓						NOTE #5
FCU-5	FAN COIL UNIT	VEST 002A	2.4FLA	120	1	✓	--	--	20A/1P	2	✓						NOTE #5
FCU-7	FAN COIL UNIT	STOR 004	2.4FLA	120	1	✓	--	--	20A/1P	2	✓						NOTE #5
FCU-7	FAN COIL UNIT	RECYCLING TRASH 013	2.4FLA	120	1	✓	--	--	20A/1P	2	✓						NOTE #5
FCU-8	FAN COIL UNIT	MECH 015	3.9FLA	120	1	✓	--	--	20A/1P	2	✓						NOTE #5
FCU-8	FAN COIL UNIT	STOR 017	3.9FLA	120	1	✓	--	--	20A/1P	2	✓						NOTE #5
FCU-9	FAN COIL UNIT	STAIR B SB00	2.4FLA	120	1	✓	--	--	20A/1P	2	✓						NOTE #5
FCU-9	FAN COIL UNIT	STAIR C SC00	2.4FLA	120	1	✓	--	--	20A/1P	2	✓						NOTE #5
FCU-9	FAN COIL UNIT	STAIR B SB01	2.4FLA	120	1	✓	--	--	20A/1P	2	✓						NOTE #5
FCU-9	FAN COIL UNIT	STAIR C SC01	2.4FLA	120	1	✓	--	--	20A/1P	2	✓						NOTE #5
FCU-12	FAN COIL UNIT	STAIR B SB02	3.9FLA	120	1	✓	--	--	20A/1P	2	✓						NOTE #5
FCU-12	FAN COIL UNIT	STAIR C SC02	3.9FLA	120	1	✓	--	--	20A/1P	2	✓						NOTE #5
FCU-10	FAN COIL UNIT	ROOF ACCESS STAIRS SD02	2.4FLA	120	1	✓	--	--	20A/1P	2	✓						NOTE #5
FPP-1	FREEZE PROTECTION PUMP	WORKSHOP 019	0.24HP	120	1	✓	--	--	20A/1P	2	✓					✓	--
GFU-1	GLYCOL FEED UNIT	MECH 012	1/3HP	120	1	✓	--	--	20A/1P	2	✓						--
GFU-2	GLYCOL FEED UNIT	MECH 012	1/3HP	120	1	✓	--	--	20A/1P	2	✓						--
KEF-1	KITCHEN EXHAUST FAN	STOR 017	5HP	480	3		--	--	20A/3P	3		✓				✓	INTERLOCKED WITH MAU-1
MAU-1 1A	MAKEUP AIR UNIT SUPPLY FAN	WORKSHOP 019	19.8MCA	480	3		--	--	25A/3P	4		✓		✓			--

AMESBURY ELEMENTARY SCHOOL

AMESBURY, MA

DINISCO DESIGN architects + planners
99 Chauncy Street, Suite 901
Boston, MA 02111
(617) 426-2858

DGT Associates
Surveying & Engineers
1071 Worcester Road
Framingham, MA 01701
(508) 879-0030

Brown Sardina, Inc.
Landscape Architects
24 Roland Street
Boston, MA 02129
(617) 482-4703

Foley Buhl Roberts & Assoc., Inc.
Structural Engineers
2150 Washington Street
Newton, MA 02462
(617) 527-9600

Crabtree McGrath Assoc., Inc.
Food Service Consultants
161 West Main Street
Georgetown, MA 01833
(978) 352-8500

VAV International, Inc.
Mechanical Engineers
400 West Cummings Park S. 4700
Woburn, MA 01801
(781) 935-7228

Thompson Engineering Company, Inc.
Electrical Engineers
89 Newbury Street, Suite 103
Danvers, MA 01923
(617) 866-9066

EdVance Technology Design, Inc.
Technology Consultants
300 Brickstone Square, Suite 201
Andover, MA 01880
(978) 256-9900

KEY PLAN

NORTH ARROW | STAMP

Date: 21 August 2020

Drawn By: JM, TD, EG

Scale: N.T.S.

Revisions

Number	Date	Description

90% COST ESTIMATE SET

Mechanical Equipment Schedule

10.3.03

© 2020 DiNisco Design

I:\18211 - Amesbury Elementary School\10.3.03.dwg, 8/14/2020 3:50:24 PM

FIRE ALARM RISER GENERAL NOTES

1 – ALL ADDRESSABLE CIRCUITS SHALL BE CLASS "A", STYLE "Z" AND THE SYSTEM SHALL BE FURNISHED WITH THE REQUIRED ADDRESSABLE LOOPS. MINIMUM ONE ADDRESSABLE LOOP PER FLOOR.

2 – ALL WIRING FOR STROBE LIGHT UNITS SHALL BE #12 AWG AND ALL WIRING FOR SPEAKER CIRCUITS SHALL BE #12 AWG SPEAKER CABLE AND ALL WIRING SHALL BE CLASS "A" STYLE "Z".

3 – ALL CONDUIT SHALL BE ¾" MINIMUM UNLESS OTHERWISE NOTED. CONDUIT SHALL BE SIZED IN ACCORDANCE WITH THE MASSACHUSEETTS ELECTRICAL CODE.

4 – FIRE ALARM SYSTEM SHALL BE INSTALLED IN ACCORDANCE WITH THE MANUFACTURER'S WIRING DIAGRAMS, SHOP DRAWINGS AND RECOMMENDATIONS. THE FIRE ALARM SYSTEM SHALL MEET THE REQUIREMENTS OF THE FIRE DEPARTMENT.

5 – COORDINATE THE EXACT LOCATION AND MOUNTING HEIGHT OF ALL FIRE ALARM DEVICES WITH THE ARCHITECT.

6 – FURNISH, INSTALL AND WIRE A REMOTE ALARM FOR EACH DUCT DETECTOR. REFER TO FLOOR PLANS FOR EXACT LOCATION OF DUCT SMOKE DETECTORS AND REMOTE ALARM TEST SWITCHES. ALL WIRING FOR TEST SWITCHES SHALL BE #14 AWG. PROVIDE ENGRAVED NAMEPLATES FOR REMOTE ALARM AND TEST SWITCHES. PRIOR TO INSTALLATION, COORDINATE LOCATION WITH ARCHITECT, AND FIRE DEPARTMENT.

7 – ALL WIRING FOR MAGNETIC DOOR HOLDERS SHALL BE #14 AWG.

8 – ALL WIRING FOR REMOTE ALARM INDICATING LIGHTS SHALL BE #14 AWG.

9 – THE FIRE ALARM SYSTEM SHALL BE CONNECTED TO THE ELEVATOR EMERGENCY RECALL SYSTEM.

10 – ALL SPEAKERS IN THE BUILDING SHALL USE A TEMPORAL CODE 3 SIGNAL. ALL STROBES SHALL BE OF THE SYNCHRONIZED TYPE. ALL STROBE UNITS SHALL BE FURNISHED TO MEET THE REQUIRED CANDELA RATINGS FOR EACH SPACE PER NFPA 72. THE SYSTEM SHALL MEET THE REQUIRED CANDELA RATINGS FOR EACH SPACE PER NFPA 72.

11 – THE FIRE ALARM SYSTEM IS DESIGNED FOR GENERAL EVACUATION, THEREFORE AN ALARM CONDITION IN ANY SECTOR OF THE BUILDING WILL ACTIVATE ALL A/V NOTIFICATION DEVICES IN THE ENTIRE COMPLEX. TROUBLE ALARM IS SUPERVISORY ONLY, NO EVACUATION OF BUILDING.

12 – THE ELECTRICAL CONTRACTOR SHALL FURNISH AND INSTALL REDUCED SIZE CAD DRAWINGS WITH INITIATING DEVICE/ ADDRESSES IN CABINET WITH LEXAN SHIELD AT THE MAIN ENTRANCE SHOWING THE FIRE ALARM SYSTEM IN THE ENTIRE COMPLEX. SHOP DRAWINGS AND AS-BUILT DRAWINGS SHALL BE INSTALLED IN A PLAN CABINET IN THE MAIN ELECTRIC ROOM. PLANS CABINET FURNISHED AND INSTALLED BY ELECTRICAL CONTRACTOR. COORDINATE WITH ARCHITECT AND FIRE DEPARTMENT.

13 – ALL WIRING SHALL BE CLASS A. ALL ADDRESSABLE LOOP CLASS A RISER WIRING SHALL BE INSTALLED IN SEPARATE EMT CONDUIT. SUPPLY AND RETURN WIRING SHALL BE INSTALLED IN SEPARATE CONDUITS. ALL CLASS A A/V NOTIFICATION CIRCUIT RISER SHALL BE INSTALLED IN SEPARATE EMT CONDUIT, SUPPLY AND RETURN WIRING SHALL BE INSTALLED IN SEPARATE EMT CONDUITS. ALL REMOTE POWER EXTENDER PANELS SHALL BE INSTALLED IN ELECTRIC CLOSETS. ALL POWER EXTENDER PANELS SHALL BE CONNECTED TO LIFE SAFETY EMERGENCY POWER PANELS WITH THE REQUIRED CONDUIT AND WIRE.

14 – EACH ADDRESSABLE LOOP SHALL BE FURNISHED WITH 20% SPARE CAPACITY FOR FUTURE DETECTORS AND MANUAL PULL STATIONS. CONTRACTOR TO INSTALL THE REQUIRED NUMBER OF ADDRESSABLE LOOPS REQUIRED TO PROVIDE 20% FUTURE CAPACITY FOR DETECTORS AND MANUAL PULL STATIONS.

15 – ELECTRICAL CONTRACTOR TO FURNISH AND INSTALL ALL REQUIRED POWER EXTENDER PANELS TO DRIVE THE A/V LIGHT UNITS IN THE BUILDING. THE DRAWINGS ARE DIAGRAMMATIC TO SHOW INTENT. ALL A/V CIRCUITS SHALL BE FURNISHED WITH 20% SPARE CAPACITY.

16 – FURNISH AND INSTALL ISOLATION MODULES EVERY TWENTY DEVICES ON ALL ADDRESSABLE LOOPS. ISOLATION MODULES ON LOOP ONLY AT FLOOR.

17 – FURNISH AND INSTALL LOCKS ON ALL CIRCUIT BREAKERS SERVING FIRE ALARM CIRCUITS.

18 – PROPERLY GROUND ALL FIRE ALARM PANELS INCLUDING FACP AND MASTER BOX TO BUILDING GROUND IN MAIN ELECTRIC ROOM.

19 – PROVIDE A DISC/USB DRIVE WITH SYSTEM PROGRAM WITH PASSWORD IN FACP AND IN THE O & M MANUAL.

20 – EVERY INITIATING DEVICE SHALL BE INSTALLED WITH ITS OWN ADDRESS.

21 – FURNISH AND INSTALL A VOICE EVACUATION SYSTEM INCLUDING HANDSET, AMPLIFIERS, SPEAKERS, AND WIRING. ALL A/V NOTIFICATION CIRCUITS SHALL BE CLASS A STYLE Z. ELECTRICAL CONTRACTOR TO FURNISH AND INSTALL ALL REQUIRED SNAC PANELS FOR A/V CIRCUITS. SPEAKER UNITS AND STROBE LIGHT UNITS SHALL OPERATE INDEPENDENTLY FROM EACH OTHER. SPEAKER UNITS AND STROBE LIGHT UNITS SHALL BE CONNECTED TO DEDICATED CIRCUITS. COMBINATION SPEAKER/STROBE UNITS SHALL BE 4-WIRE UNITS. ALL SPEAKERS SHALL TYPICALLY BE TAPPED AT 1W, EXCEPT SPEAKERS IN TOILETS, SMALL OFFICES, AND CONFERENCE ROOMS SHALL BE TAPPED AT 1/2W. MAXIMUM OF FIFTEEN STROBE UNITS OR SPEAKER UNITS PER CIRCUIT. PROVIDE 20% SPARE CAPACITY. NUMBER OF DEVICES ON EACH CIRCUIT SHALL DEPEND ON DEVICE AMPACITY. TWO OR THREE SNAC PANELS MAY BE REQUIRED AT ANY LOCATION. TYPICAL. MINIMUM OF TWO SPEAKER CIRCUITS PER FLOOR.

22 – FURNISH AND INSTALL DIGITAL DIALER FOR ALARM, SUPERVISORY, AND TROUBLE ALARMS. FURNISH AND INSTALL TWO CAT 6 TELEPHONE CABLES – ¾" CONDUIT FROM FACP TO MDF ROOM. THE DIGITAL DIAL ON SHALL BE PROGRAMMED TO TRANSMIT THE FOLLOWING SIGNALS
A–ANY ALARM CONDITION TO AMESBURY FD
B–DUCT SMOKE DETECTOR SUPERVISORY TO AMESBURY FD
C–CARBON MONOXIDE SUPERVISORY TO AMESBURY FD
D–AUTOMATIC DEFIBRILLATOR DEVICES TO AMESBURY FD
E–ALL OTHER SUPERVISORY ALARMS TO CENTRAL STATION
F–ALL TROUBLE ALARMS TO CENTRAL STATION

23 – ADDRESSABLE LOOP. CONNECT TO ALL INITIATING DEVICES ON EACH FLOOR. USE ONE ADDRESSABLE LOOP PER FLOOR. ALL WIRING CLASS "A" STYLE "Z". FURNISH AND INSTALL ISOLATION MODULES EVERY TWENTY (20) DEVICES. PROVIDE 20% SPARE CAPACITY PER LOOP.

24 – FURNISH AND INSTALL A DEDICATED 20A–1P BRANCH FEEDER TO EACH NODE, FACP, AND SNAC PANELS. CONNECT TO 120/208–VOLT EMERGENCY LIFE SAFETY PANEL WITH THE CONDUIT, WIRE, OR MC CABLE. TYPICAL FOR ALL FIRE ALARM PANELS.

25 – FURNISH AND INSTALL THREE RELAYS FOR ELEVATOR RECALL (PRIMARY, SECONDARY, ELEVATOR MACHINE ROOM). FURNISH AND INSTALL ALL SMOKE DETECTORS AT EACH LOBBY AND MACHINE ROOM. FURNISH AND INSTALL ALL REQUIRED EQUIPMENT AND WIRE.

26 – FURNISH AND INSTALL FLOOR OR WALL RECESSED, LOW PROFILE MAGNETIC DOOR CONTACTS AS REQUIRED AT EACH DOOR LOCATION. DOOR CONTACTS TO DERIVE POWER FROM FIRE ALARM SYSTEM. THE ELECTRICAL CONTRACTOR SHALL FURNISH AND INSTALL THE REQUIRED EQUIPMENT MATERIAL AND LABOR TO FURNISH AND INSTALL RELAYS/CONTACTORS TO BYPASS THE POWER TO ALL MAGNETIC DOOR HOLD OPENS IN THE ENTIRE BUILDING VIA ONE SWITCH IN THE PRINCIPALS OFFICE. DURING A LOCK DOWN SITUATION ALL MAGNETIC DOOR HOLD OPENS SHALL BE DE–ENERGIZED VIA ONE SWITCH AND ALL DOORS SHALL LOCK. THIS FEATURE SHALL BE OPERATIONAL REGARDLESS OF THE FIRE ALARM SYSTEM CONDITION – NORMAL, ALARM SUPERVISORY OR TROUBLE.

27 – SELF–ADHESIVE LABELS ADDRESS NUMBERS SHALL BE INSTALLED ON ALL INITIATING DEVICES AND MODULES WITH ADDRESSES.

28 – THE MANUFACTURER OR ELECTRICAL CONTRACTOR SHALL SUBMIT POINT–TO–POINT RISER DIAGRAM SHOWING ALL WIRING AND BATTERY CALCULATIONS WITH SHOP DRAWINGS. FINAL APPROVAL OF THE SHOP DRAWINGS WILL NOT BE GIVEN WITHOUT THE CALCULATIONS.

29 – CONDUIT, CABLE, WIREMOLD INSTALLATION NOTES:

–WHERE FIRE ALARM WIRING IS INSTALLED EXPOSED IN NON–PUBLIC AREAS, WIRING SHALL BE INSTALLED IN METAL CONDUIT (EMT).

–IN PUBLIC AREAS, WHERE FIRE ALARM WIRING IS INSTALLED CONCEALED IN CMU WALLS, WIRING SHALL BE INSTALLED RIGID GALVANIZED CONDUIT.

–WHERE FIRE ALARM WIRING IS INSTALLED CONCEALED IN WALLS AND ABOVE CEILINGS DUAL RATED METAL–CLAD FIRE ALARM TYPE MC/FPLP SHALL BE USED.

–WHERE IT IS IMPOSSIBLE TO INSTALL FIRE ALARM WIRING CONCEALED IN WALLS AND ABOVE CEILINGS IN PUBLIC SPACES WIREMOLD SURFACE METAL RACEWAY AND WIREMOLD OUTLET BOXES SHALL BE USED. (COORDINATE WITH ARCHITECT FIRST.)

30 – PER THE REQUIREMENTS OF NFPA 72 CHAPTER 14, A DIFFERENTIAL PRESSURE TEST SHALL BE PREFORMED FOR ALL DUCT SMOKE DETECTORS BY THE ELECTRICAL CONTRACTOR AND HVAC CONTRACTOR DURING THE PRETEST AND THE FINAL FIRE DEPARTMENT TEST. ELECTRICAL CONTRACTOR AND HVAC CONTRACTOR TO SUBMIT A TEST REPORT FOR ALL DUCT SMOKE DETECTORS AFTER BOTH TESTS TO THE ARCHITECT FOR APPROVAL. THE ELECTRICAL CONTRACTOR AND HVAC CONTRACTOR SHALL RELOCATE ALL DUCT SMOKE DETECTORS AS REQUIRED BY THE TEST RESULTS AT NO ADDITIONAL COST TO THE OWNER.

31 – FIRE ALARM ZONE ADDRESSABLE MODULE TO RELEASE SECURITY LOCKED DOORS DURING ALARM CONDITION. ELECTRICAL CONTRACTOR TO FURNISH AND INSTALL A 20A–1P CIRCUIT FROM NEAREST 208V LIFE SAFETY EMERGENCY POWER PANEL TO THE SECURITY LOCK POWER SUPPLY AT EACH DOOR.

32 – ALL DUCT SMOKE DETECTORS LOCATED IN DUCT WORK ON THE ROOF SHALL BE FURNISHED AND INSTALLED WITH A NEMA 3R HOUSING. FURNISH AND INSTALL A HEAT ELEMENT WITH THERMOSTAT CONNECTED TO NEAREST LIFE SAFETY EMERGENCY PANEL.

33 – PROVIDE CARBON MONOXIDE DETECTORS IN ALL MECHANICAL ROOMS WITH FOSSIL FUEL BURNING EQUIPMENT. CARBON MONOXIDE DETECTORS TO BE LOCATED WITHIN 10'–0" OF EACH FOSSIL FUEL BURNING EQUIPMENT. CONNECT CARBON MONOXIDE DETECTORS TO FIRE ALARM ADDRESSABLE LOOP WITH THE REQUIRED MONITOR MODULE. REFER TO HVAC AND PLUMBING DRAWINGS FOR EQUIPMENT LOCATION.

34 – FIRE ALARM CONTROL PANEL AND ANNUNCIATOR SHALL BE FURNISHED WITH A HAND SET AND CALL SWITCHES IN A COMMON ENCLOSURE. PROVIDE THE REQUIRED EQUIPMENT, WIRING, AND PROGRAMMING FOR THE FOLLOWING AUDIO CALL SWITCH ZONES..
A – ALL CALL – ENTIRE BUILDING.
B – GROUND FLOOR.
C – 1ST FLOOR.
D – 2ND FLOOR.

35 – FIRE ALARM CONTROL PANEL AND ANNUNCIATOR SHALL BE PROVIDED WITH A FIRE DRILL SWITCH.

36 – THE ELECTRICAL CONTRACTOR AND HIS SUBCONTRACTOR SHALL FURNISH AND INSTALL AN EMERGENCY RADIO COMMUNICATION SYSTEM FOR FIRE DEPARTMENT, POLICE DEPARTMENT, AND SCHOOL DEPARTMENT RADIOS (BI–DIRECTIONAL AMPLIFIER SYSTEM). THE SYSTEM SHALL CONSIST OF AMPLIFIER/RECIEVER, ANTENNAS ON THE ROOF AND CABLING WITH ANTENNAS THROUGHOUT THE BUILDING. AMPLIFIER/RECEIVER SHALL BE LOCATED IN THIRD FLOOR ELECTRIC ROOM. SYSTEM SHALL PROVIDE 100% COVERAGE THROUGH THE BUILDING. REFER TO SPECIFICATIONS. BI–DIRECTIONAL AMPLIFIER SYSTEM SYSTEM TO BE FURNISHED WITH AN OVERRIDE SWITCH AT THE FIRE ALARM CONTROL PANEL TO ACTIVATE/DE–ACTIVATE THE BI–DIRECTIONAL AMPLIFIER SYSTEM. PROVIDE GROUND CONDUCTOR FROM MAIN ELECTRIC SERVICE TO BI–DIRECTIONAL AMPLIFIER SYSTEM LOCATION. REFER TO BI–DIRECTIONAL AMPLIFIER SYSTEM SPECIFICATION SECTION 265561.

FIRE ALARM SYSTEM OUTPUT MATRIX

#	DESCRIPTION	FACP & REMOTE ANNUNCIATOR: ACTUATE ALARM SIGNAL INDICATOR (A)	ACTUATE AUDIBLE ALARM SIGNAL (B)	ACTUATE SUPERVISORY SIGNAL INDICATOR (C)	ACTUATE AUDIBLE SUPERVISORY SIGNAL (D)	ACTUATE TROUBLE SIGNAL INDICATOR (E)	ACTUATE AUDIBLE COMMON TROUBLE SIGNAL (F)	NOTIFICATION: ACTUATE ALL EVACUATION SIGNALS (G)	DISPLAY CHANGE OF STATUS (H)	TRANSMIT FIRE ALARM SIGNAL TO MASTER BOX (I)	TRANSMIT SUPERVISORY SIGNAL TO CENTRAL STATION (J)	TRANSMIT TROUBLE SIGNAL TO CENTRAL STATION (K)	REQUIRED FIRE SAFETY CONTROL: RELEASE MAGNETICALLY HELD SMOKE DOORS (L)	RECALL ELEVATORS TO PRIMARY RECALL FLOOR (M)	RECALL ELEVATORS TO ALTERNATE RECALL FLOOR (N)	RECALL ELEVATORS - ELEVATOR MACHINE ROOM (O)	CLOSE SMOKE/FIRE DAMPERS IN RATED WALLS (P)	CLOSE FIRE SHUTTERS (Q)	UNLOCK EXITS (R)	CLOSE GAS SOLENOID VALVES (S)	SHUTDOWN INSPECTIONS - HVAC UNIT FANS (T)	SHUTDOWN PROCESS - SOUND SYSTEMS (U)	EVERSE LIGHTING CONTROL SYSTEMS (V)	ACTUATE EXTERIOR STROBE AT F.D RESPONSE POINT (W)	SPRINKLER ELECTRIC BELL (X)	SUPPLEMENTARY: (Y)
1	SMOKE DETECTORS	●	●					●	●	●			●					●					●	●	●		
2	HEAT DETECTORS	●	●					●	●	●			●					●					●	●	●		
3	MANUAL PULL STATIONS	●	●					●	●	●			●					●					●	●	●		
4	DUCT SMOKE DETECTORS			●	●				●							●					●	●					
5	SPRINKLER TAMPER SWITCH			●	●				●	●	●															●		
6	SPRINKLER FLOW SWITCH	●	●					●	●	●			●					●					●	●	●	●	
7	SPRINKLER PRESSURE SWITCH			●	●				●	●	●															●		
8	BI–DIRECTIONAL AMPLIFIER			●	●						●	●																
9	ANSUL SYSTEM	●	●					●	●	●			●					●		●			●	●	●		
10	CO DETECTOR	●	●					●	●	●										●			●	●	●		
11	ELEVATOR LOBBY & ROOM SMOKE DETECTORS	●	●					●	●	●			●	●	●	●		●					●	●	●		
12	NOTIFICATION APPLIANCE CIRCUIT SHORT					●	●					●																
13	FIRE ALARM SYSTEM LOW BATTERY					●	●					●																
14	OPEN CIRCUIT					●	●					●																
15	GROUND FAULT					●	●					●																

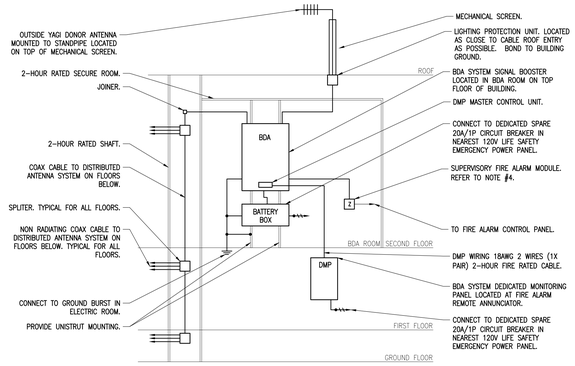

BI–DIRECTIONAL AMPLIFIER SYSTEM WIRING DIAGRAM
N.T.S.

NOTES

1 – COORDINATE WITH THE FIRE DEPARTMENT.

2 – CONTRACTOR TO COORDINATE RADIO FREQUENCIES WITH FIRE AND POLICE DEPARTMENT.

3 – CONTRACTOR TO PROVIDE A BDA SYSTEM THAT PROVIDES 95 DBA COVERAGE IN 95% (MIN) OF THE BUILDING. CONTRACTOR TO PROVIDE AS MANY ANTENNAS AND ASSOCIATED CABLING TO MEET 95 DBA IN 95% OF THE BUILDING REQUIREMENT. MINIMUM OF TWO ANTENNA PER FLOOR.

4 – FIRE ALARM MONITOR MODULES SHALL BE PROVIDED FOR THE FOLLOWING FIRE ALARM SYSTEM TROUBLE SIGNALS:
A – AC POWER NORMAL.
B – AC POWER LOSS.
C – BDA TROUBLE.
D – ANTENNA TROUBLE.
E – BATTERY CHARGER TROUBLE.
F – BATTERY LOW.

5 – CONTRACTOR TO VERIFY ALL QUANTITIES. SYSTEM TO BE INSTALLED PER MANUFACTURER'S REQUIREMENTS.

6 – COORDINATE EXACT LOCATION OF ANTENNA ON ROOF WITH ARCHITECT.

7 – BDA CABINET AND BATTERY BOX SHALL BE MOUNTED ON TWO PIECES OF UNISTRUT. UNISTRUT TO BE RUN FROM STRUCTURAL FLOOR TO STRUCTURAL CEILING. GROUND CABINET AND BATTERY BOX TO BUILDING GROUND WITH #4 GROUND CONDUCTOR.

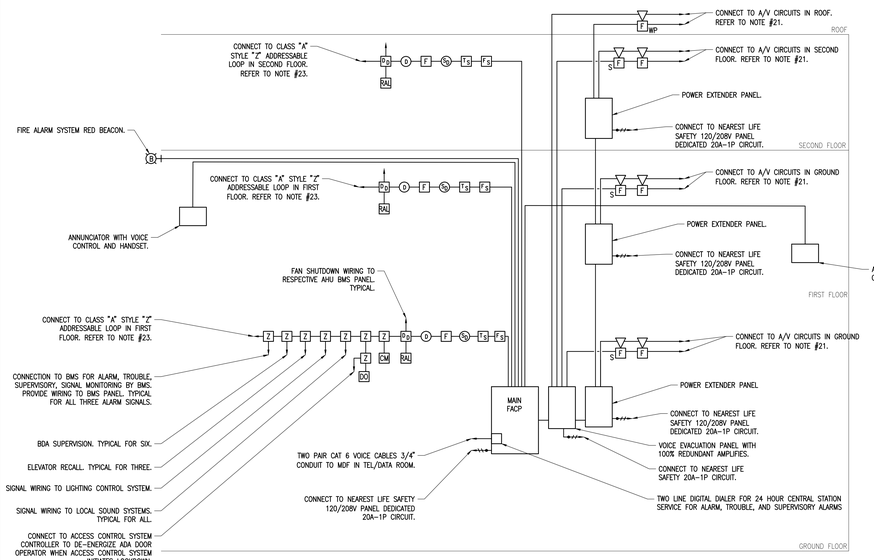

FIRE ALARM SYSTEM RISER DIAGRAM
N.T.S.

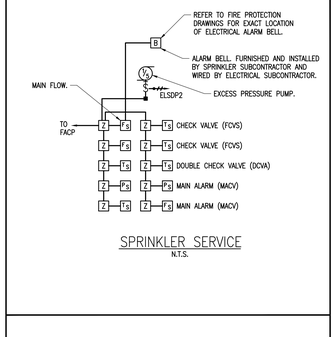

SPRINKLER SERVICE
N.T.S.

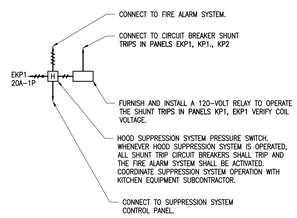

KITCHEN HOOD SUPPRESSION SYSTEM WIRING DIAGRAM
N.T.S.

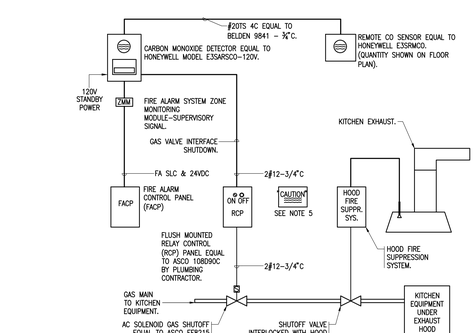

INTERFACE CONTROL DETAIL FOR GAS EQUIPMENT SHUTDOWN
N.T.S.

KITCHEN AND MECHANICAL CARBON MONOXIDE DETECTOR FIRE ALARM SYSTEM INTERFACE NOTES

1 – THE ELECTRICAL SUBCONTRACTOR SHALL FURNISH AND INSTALL ALL REQUIRED WIRING (MC CABLE AND LOW VOLTAGE) FOR THE SYSTEM.

2 – CONNECT THE RELAY CONTROL PANEL TO THE AC SOLENOID MAIN GAS SHUTOFF VALVE WITH THE REQUIRED WIRING. REFER TO PLUMBING DRAWINGS FOR EXACT LOCATION OF GAS MAIN AND SHUTOFF VALVE. WHEN CARBON MONOXIDE IS DETECTED, THE RELAY CONTROL PANEL POWER SHALL BE DE–ENERGIZED TO CLOSE THE GAS VALVE. COORDINATE WITH PLUMBING.

3 – FURNISH AND INSTALL A BRANCH CIRCUIT FROM PANEL EXP1 #42 TO THE GAS SHUTOFF VALVE. CONNECT TO THE VALVE WITH #2#12 & 1#12 GRD(MC CABLE). REFER TO PLUMBING DRAWINGS FOR GAS SHUTOFF VALVE LOCATION.

4 – WHEN THE SYSTEM DETECTS CARBON MONOXIDE, THE SYSTEM SHALL GO INTO AN ALARM CONDITION. WHEN THE SYSTEM GOES INTO ALARM CONDITION THE FOLLOWING SHALL OCCUR:
– WHEN CARBON MONOXIDE IS DETECTED, THE RELAY CONTROL PANEL POWER SHALL BE DE–ENERGIZED TO CLOSE THE GAS VALVE.
– THE RELAY CONTROL PANEL SHALL TRANSMIT A SIGNAL TO THE FIRE ALARM CONTROL PANEL. THE FIRE ALARM SYSTEM SHALL GO INTO ALARM CONDITION. ALL FIRE ALARM SIGNALS SHALL SOUND AND THE BUILDING SHALL BE EVACUATED. THE MASTER BOX SHALL BE TRIPPED.

5 – THE SYSTEM SHALL BE RE–SET AT THE RELAY CONTROL PANEL BY TURNING KEY SWITCH TO ON. THIS SHALL BE DONE AFTER RESETTING OF THE FACP AND CARBON MONOXIDE DETECTOR.

6 – THE ELECTRICAL SUBCONTRACTOR SHALL FURNISH ALL LABOR, EQUIPMENT AND WIRE TO PROPERLY INSTALL AND TEST THE SYSTEM.

7 – REFER TO PLUMBING DRAWINGS FOR GAS VALVE INTERLOCK SYSTEM.

NOTES

1 – PROVIDE A TWO–WAY COMMUNICATIONS SYSTEM ON ALL UPPER LEVEL ELEVATOR LANDINGS, TO MEET THE REQUIREMENTS OF STATE BUILDING CODE SECTION 780 CMR 1009.8.

2 – TWO–WAY COMMUNICATIONS SYSTEM (ELEVATOR LANDINGS) SHALL CONSIST OF POWER SUPPLY WITH BATTERY BACKUP, CALL BOX STATIONS AT EACH ELEVATOR LANDING EXCEPT AT FIRST FLOOR, AND BASE STATION LOCATED ADJACENT TO THE MAIN FIRE ALARM ANNUNCIATOR. THE INTENT IS FOR THE BASE STATION TO BE ABLE TO PICK UP AND HAVE TWO–WAY COMMUNICATIONS WITH ANY OF THE CALL BOX STATIONS. THE TWO–WAY COMMUNICATIONS SYSTEM DESCRIPTION IS BASED ON RATH OR APPROVED EQUAL. RETAIN THE SERVICES OF THE MANUFACTURER'S AUTHORIZED SERVICE COMPANY TO COMPLETE THE COMMISSIONING AND PROGRAMMING SETUP.

3 – POWER SUPPLY WITH BATTERY BACKUP SHALL BE RATH #2500–PWR24 SERIES.

4 – WALL FLUSH MOUNT BRUSHED STAINLESS STEEL CALL BOX STATIONS SHALL BE RATH #2100–958SSRC2 CALL BOX WITH COVER/#7049 SIGNATURE/#7044 BRAILLE/#7050 CUSTOM LABELED "HELP PHONE". ALL LABELING SHALL BE MODIFIED TO READ AS "HELP PHONE" WITH HANDICAP WHEELCHAIR SYMBOL, (NOT AREA OF REFUGE).

5 – WALL FLUSH MOUNT BRUSHED STAINLESS STEEL BASE STATION SHALL BE RATH #2500–205B WITH #2100–VOIP INTERFACE DEVICE, OR APPROVED EQUAL.

6 – PROVIDE DEDICATED COMMUNICATIONS SHIELDED TWISTED CABLING AND 24V LOW VOLTAGE POWER AS REQUIRED TO COMPLETE WIRING BETWEEN THE BASE STATION AND RESPECTIVE CALL BOX STATIONS. ALL CABLING SHALL BE IN METAL CONDUIT. REFER TO MANUFACTURER'S WIRING DIAGRAMS FOR TERMINATIONS AND CABLING QUANTITIES/SIZES AND ELECTRICAL REQUIREMENTS.

7 – PROVIDE TELECOMMUNICATIONS FOR DIAL–OUT TO OWNER'S VOIP PHONE SYSTEM. FIELD COORDINATE WITH DIVISION 270001 CONTRACTOR.

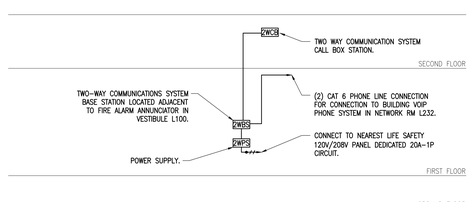

TWO–WAY COMMUNICATIONS SYSTEM (ELEVATOR LANDINGS) RISER DIAGRAM
N.T.S.

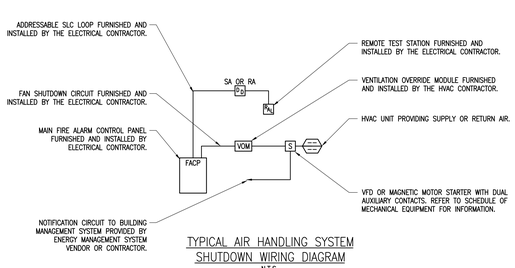
ADDRESSABLE SLC LOOP FURNISHED AND INSTALLED BY THE ELECTRICAL CONTRACTOR.
REMOTE TEST STATION FURNISHED AND INSTALLED BY THE ELECTRICAL CONTRACTOR.
SA OR RA
FAN SHUTDOWN CIRC

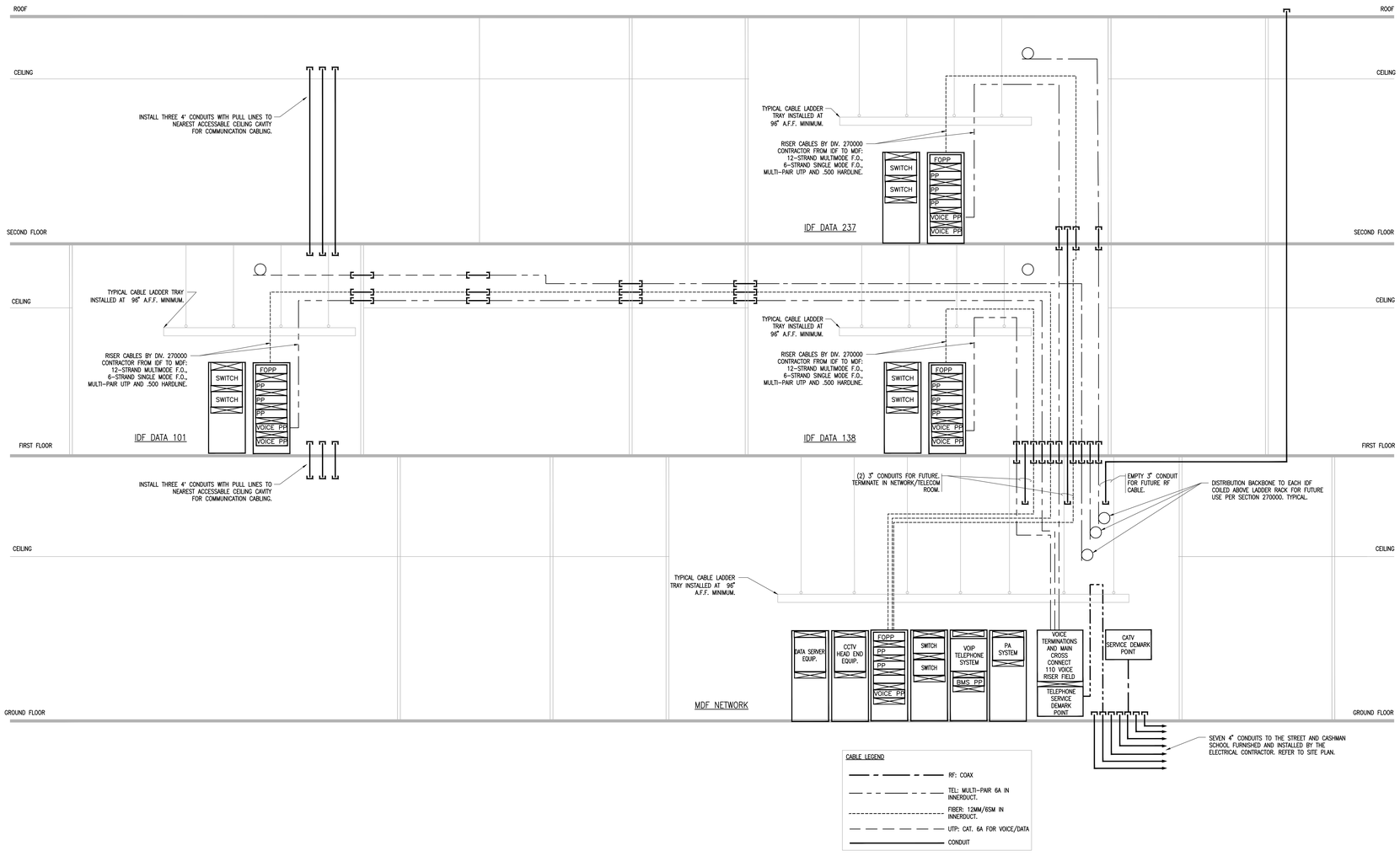

VOICE/DATA CLOSET NOTE

1 – GENERAL CONTRACTOR SHALL FURNISH AND INSTALL ¾" FIRE RATED PLYWOOD BACKBOARD FROM 2'-0" AFF TO 8'-0" AFF ON ALL WALLS IN VOICE/DATA CLOSETS. PLYWOOD SHALL BE INSTALLED WALL TO WALL. PAINTING SUBCONTRACTOR SHALL PAINT THE PLYWOOD BACKBOARDS.

AMESBURY ELEMENTARY SCHOOL

AMESBURY, MA

DINISCO DESIGN architects + planners
99 Chauncy Street, Suite 901
Boston, MA 02111
(617) 426-2858

DGT Associates
Surveying & Engineers
1071 Worcester Road
Framingham, MA 01701
(508) 879-0030

Brown Sardina, Inc.
Landscape Architects
24 Roland Street
Boston, MA 02129
(617) 482-4703

Foley Buhl Roberts & Assoc., Inc.
Structural Engineers
2150 Washington Street
Newton, MA 02462
(617) 527-9600

Crabtree McGrath Assoc., Inc.
Food Service Consultants
161 West Main Street
Georgetown, MA 01833
(978) 352-8500

VAV International, Inc.
Mechanical Engineers
400 West Cummings Park S. 4700
Woburn, MA 01801
(781) 935-7228

Thompson Engineering Company, Inc.
Electrical Engineers
89 Newbury Street, Suite 103
Danvers, MA 01923
(617) 866-9066

EdVance Technology Design, Inc.
Technology Consultants
300 Brickstone Square, Suite 201
Andover, MA 01880
(978) 256-9900

KEY PLAN

NORTH ARROW | STAMP

Date: 21 August 2020

Drawn By: JM, TD, EG

Scale: N.T.S.

Revisions

Number	Date	Description

90% COST ESTIMATE SET

Voice/Data Riser Diagram

10.3.05

© 2020 DiNisco Design

C:\Users\jmcdonough\Documents\21011_Amesbury Elementary_DiNisco10.2.5D.rvt 8/14/2020 3:56:37 PM

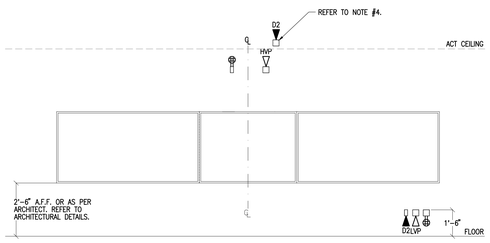

TYPICAL CLASSROOM/PROJECTOR OUTLET DETAIL

N.T.S.

NOTES

1 – REFER TO ARCHITECTURAL DRAWINGS FOR DETAILS. COORDINATE INSTALLATION WITH ARCHITECT AND GENERAL CONTRACTOR.

2 – THE ELECTRICAL SUBCONTRACTOR SHALL FURNISH AND INSTALL ALL REQUIRED ELECTRICAL EQUIPMENT REQUIRED FOR A COMPLETE INSTALLATION.

3 – REFER TO ARCHITECTURAL FLOOR PLANS, ELECTRICAL DRAWINGS FOR ELECTRICAL SYSTEM DETAILS.

4 – LOCATION OF BOXES (POWER, AV, AND DATA) ABOVE WHITEBOARD TO SUPPORT PROJECTOR MAY CHANGE DEPENDING ON THE OWNER'S PROJECTOR. CONFIRM EXACT LOCATIONS WITH ARCHITECT, ENGINEER, AND OWNERS PRIOR INSTALLATION ABOVE WHITEBOARDS. REFER TO ARCHITECTURAL PROJECTOR MOUNTING DETAIL B, DRAWING S.4.01 FOR EXACT LOCATIONS.

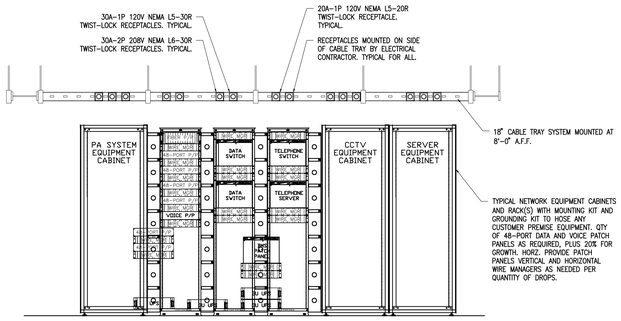

MAIN DISTRIBUTION FRAME MDF RACK CONFIGURATION

SCALE: 1/4" = 1'–0"

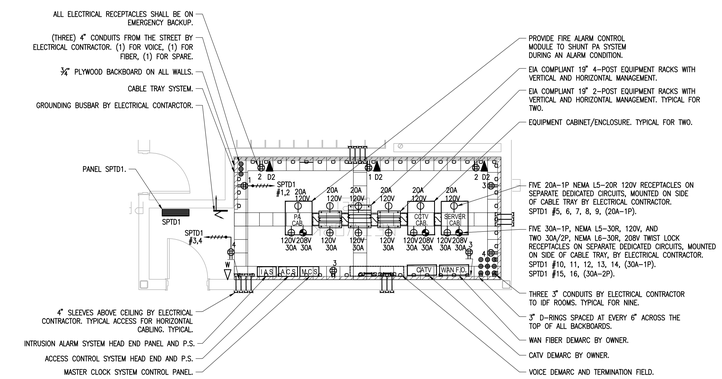

MAIN DISTRIBUTION FRAME MDF ROOM LAYOUT – NETWORK 032

SCALE: 1/4" = 1'–0"

NOTES

1 – THE ELECTRICAL SUBCONTRACTOR WITH THEIR TECHNOLOGY SUBCONTRACTOR SHALL FURNISH AND INSTALL STRUCTURED CABLING SYSTEM, AUDIO VIDEO COMMUNICATION SYSTEM, DISTRIBUTED COMMUNICATION SYSTEM, AND INTEGRATED SECURITY SYSTEM, INCLUDING EQUIPMENT, CONDUIT AND CABLE. REFER TO THE ELECTRICAL AND TECHNOLOGY SPECIFICATIONS.

2 – FURNISH AND INSTALL A 18" COPPER GROUND BUS ON THE PLYWOOD BACKBOARD IN ALL MDF / IDF CLOSETS. FURNISH AND INSTALL A #8 GROUND CONDUCTOR – ¾" CONDUIT FROM GROUND BUS TO THE EQUIPMENT GROUND BUS IN ELECTRIC ROOM. ALL EQUIPMENT RACKS FOR THE DATA NETWORK, TELECOMMUNICATIONS AND IPTV SYSTEM SHALL BE BONDED TO THE GROUND BUS WITH A #8 GROUND CONDUCTORS – ¾" CONDUIT. ALSO CONNECT THE CABLE TRAY TO THE GROUND WITH AN #8 GROUND CONDUCTOR – ¾" CONDUIT. TYPICAL FOR FIVE LOCATIONS.

3 – THE ELECTRICAL SUBCONTRACTOR SHALL FURNISH AND INSTALL AN ENTIRE EMPTY CONDUIT SYSTEM. INCLUDING CONDUIT, PULL LINE, OUTLET BOX, PLASTER RING AND INSULATING BUSHINGS.

4 – FOR ANY CONDUIT INSTALLED BELOW GRADE BETWEEN THE IDF CLOSET AND MDF ROOM, FURNISH AND INSTALL A #6 GROUND CONDUCTOR IN CONDUIT. PROVIDE GROUND BUSHINGS TO EACH END OF CONDUIT AND BOND TO GROUND BUS.

5 – THE GENERAL CONTRACTOR SHALL FURNISH AND INSTALL ALL REQUIRED PLYWOOD BACKBOARDS. ELECTRICAL SUBCONTRACTOR SHALL FURNISH AND INSTALL ALL REQUIRED UNISTRUT, CONDUIT SLEEVES, RECEPTACLES, GROUND BARS, CONDUIT AND WIRING REQUIRED FOR THE VOICE/DATA SYSTEM.

6 – THE ELECTRICAL SUBCONTRACTOR'S TECHNOLOGY SUBCONTRACTOR SHALL FURNISH AND INSTALL ALL REQUIRED VOICE/DATA, CABLES, DEVICE PLATES, DEVICE JACKS, PATCH PANEL, FIBER OPTIC CABLE, AND FIBER PATCH PANELS. REFER TO THE ELECTRICAL AND TECHNOLOGY SPECIFICATIONS. THE ELECTRICAL SUBCONTRACTOR SHALL SUPERVISE AND COORDINATE THE TECHNOLOGY SUBCONTRACTOR'S SCOPE OF WORK. THE ELECTRICAL SUBCONTRACTOR SHALL BE RESPONSIBLE FOR THE ENTIRE VOICE/DATA SYSTEM.

7 – THE TECHNOLOGY SUBCONTRACTOR SHALL FURNISH AND INSTALL A FIBER OPTIC CABLE FROM EACH IDF CLOSET FIBER PATCH PANEL TO THE FIBER PATCH PANEL IN THE HEAD END ROOM (MDF). THE TECHNOLOGY SUBCONTRACTOR SHALL FURNISH AND INSTALL 25–PAIR COPPER CABLES BACK BONE BETWEEN EACH IDF CLOSET AND MDF ROOM.

8 – THE TECHNOLOGY SUBCONTRACTOR SHALL TERMINATE THE VOICE/DATA CABLES ON THE AND PATCH PANELS IN RACKS.

9 – REFER TO TECHNOLOGY SYSTEM SPECIFICATIONS, 270100, 274000, 275000, AND 281000.

10 – ELECTRICAL CONTRACTOR TO PROPERLY GROUND ALL DATA NETWORK RACKS.

11 – THE ELECTRICAL CONTRACTOR SHALL FURNISH AND INSTALL AT THE PROPER LOCATIONS ALL CABLE PATHWAYS INCLUDING CONDUIT, SLEEVES, PULL LINE, OUTLET BOX, PLASTER RING, GROUNDING SYSTEM INCLUDING BUSBAR AND GROUND CONDUCTORS, INSULATING BUSHINGS, FLOOR BOXES, CABLE TRAY AND 120 VAC POWER REQUIREMENTS. ELECTRICAL CONTRACTOR TO PROVIDE PULL LINE IN ALL CONDUITS.

12A – ALUMINUM CABLE TRAY SHALL BE 18" WIDE IN MDF AND 12" WIDE IN IDF ROOMS WITH 3" SIDES AND 3½" WIDE LOUVERED BOTTOM OPENINGS SPACED ON 4½" CENTERS. CABLE TRAY SHALL BE FURNISHED WITH A BARRIER STRIP FOR EACH STRAIGHT SECTION AND EACH HORIZONTAL BEND. ELECTRICAL CONTRACTOR TO SUPPORT HORIZONTAL, VERTICAL, AND OVERHEAD CABLE. SUPPORT CABLE TRAY FROM BUILDING STRUCTURE WITH THREADED ROD HANGERS ON EACH SIDE OF THE TRAY. CABLE TRAY SHALL BE CHALFANT CABLE TRAYS SERIES 16A OR APPROVED EQUAL. ALL CABLE TRAYS WITH REQUIRED SUPPORTS AND ALL REQUIRED ACCESSORIES FURNISHED AND INSTALLED BY ELECTRICAL CONTRACTOR.

12B – AT MDF, CABLE TRAY SYSTEM TO SUPPORT HORIZONTAL/VERTICAL AND OVERHEAD CABLE 18" CABLE TRAY WITH 4" SIDE STRINGERS MIN., 6" RUNG SPACING MOUNTED AT 8'–0" A.F.F., WITH CABLE RUNWAY RADIUS DROPOUT ABOVE EACH EQUIPMENT RACK BY ELECTRICAL CONTRACTOR.

13 – REFER TO SYMBOL LIST FOR TECHNOLOGY OUTLET DETAILS.

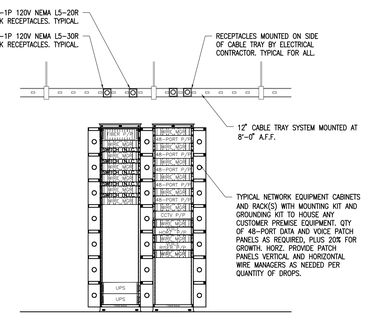

TYPICAL IDF RACK CONFIGURATION

N.T.S

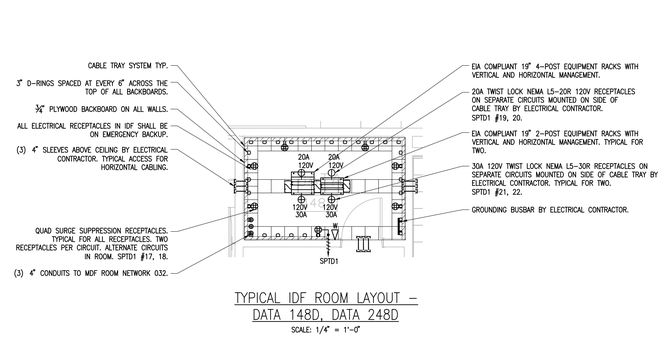

TYPICAL IDF ROOM LAYOUT – DATA 148D, DATA 248D

SCALE: 1/4" = 1'–0"

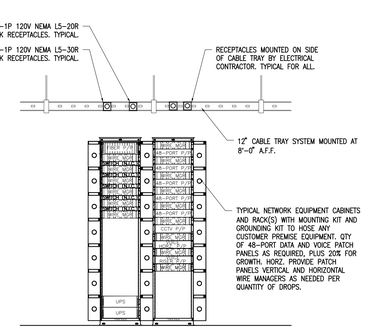

TYPICAL IDF RACK CONFIGURATION

N.T.S

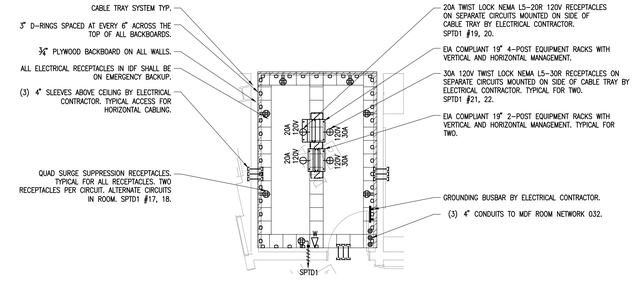

IDF ROOM LAYOUT – DATA 112

SCALE: 1/4" = 1'–0"

AMESBURY ELEMENTARY SCHOOL

AMESBURY, MA

DINISCO DESIGN architects + planners
99 Chauncy Street, Suite 901
Boston, MA 02111
(617) 426-2858

DGT Associates
Surveying & Engineers
1071 Worcester Road
Framingham, MA 01701
(508) 879-0030

Brown Sardina, Inc.
Landscape Architects
24 Roland Street
Boston, MA 02129
(617) 482-4703

Foley Buhl Roberts & Assoc., Inc.
Structural Engineers
2150 Washington Street
Newton, MA 02462
(617) 527-9600

Crabtree McGrath Assoc., Inc.
Food Service Consultants
161 West Main Street
Georgetown, MA 01833
(978) 352-8500

VAV International, Inc.
Mechanical Engineers
400 West Cummings Park S. 4700
Woburn, MA 01801
(781) 935-7228

Thompson Engineering Company, Inc.
Electrical Engineers
89 Newbury Street, Suite 103
Danvers, MA 01923
(617) 866-9066

EdVance Technology Design, Inc.
Technology Consultants
300 Brickstone Square, Suite 201
Andover, MA 01880
(978) 256-9900

KEY PLAN

NORTH ARROW | STAMP

Date: 21 August 2020

Drawn By: JM, TD, EG

Scale: AS NOTED

Revisions

Number	Date	Description

90% COST ESTIMATE SET

Voice/Data Details

10.3.06

© 2020 DiNisco Design

I:\2017 - Amesbury Elementary School\10.3.06.dwg, 8/21/2020 2:30:37 PM

LIGHTING CONTROL NOTES

1 – PHOTOCELLS SHALL BE INSTALLED IN ALL CLASSROOMS, OFFICES, AND SPACES WITH EXTERIOR WINDOWS.

2 – ALL LIGHTING FIXTURES WITHIN 20'-0" OF AN EXTERIOR WINDOW SHALL BE CONTROLLED BY A PHOTOCELL. IN GYMNASIUM, CAFETERIA, AND LIBRARY, MORE FIXTURES WILL BE CONTROLLED BY PHOTOCELL. EXACT LIGHTING CIRCUITS TO BE DETERMINED DURING PROGRAMMING.

3 – OCCUPANCY SENSORS SHALL BE INSTALLED IN ALL CLASSROOMS, ROOMS, AND SPACES. ALL OCCUPANCY SENSORS SHALL BE PROGRAMMED TO OPERATE AS VACANCY SENSORS (MANUAL ON/AUTO OFF). ALL SENSORS IN TOILETS SHALL BE PROGRAMMED AS OCCUPANCY SENSORS (AUTO ON/AUTO OFF).

4 – IN OFFICES, AT LEAST 50% OF THE ROOM'S RECEPTACLES SHALL BE CONTROLLED BY ROOM OCCUPANCY SENSORS OR LIGHTING CONTROL SYSTEM SCHEDULE. RECEPTACLES IN OFFICES TO BE DE-ENERGIZED WHEN BUILDING IS UNOCCUPIED. ELECTRICAL CONTRACTOR TO FURNISH AND INSTALL THE REQUIRED LIGHTING CONTROL SYSTEM RELAYS, EQUIPMENT WIRING, PROGRAMMING AND TESTING.

5 – ALL LIGHTING IN CLASSROOMS, OFFICES, AND OTHER SPACES SHALL BE DIMMABLE AND CONTROLLED BY ROOM DIMMER SWITCHES.

6 – TYPICAL CLASSROOM LIGHTING – EACH ROOM HAS FOUR SEPARATE LIGHTING ZONES. EACH ZONE SHALL BE CONTROLLED ON/OFF AND DIMMED SEPARATELY.

7 – ALL STAIRWELLS AND CORRIDORS SHALL BE FURNISHED WITH AN OCCUPANCY SENSOR. ALL STAIRWELLS AND CORRIDORS SENSORS SHALL BE PROGRAMMED TO DIM LIGHTING TO 50% WHEN EACH INDIVIDUAL STAIRWELL AND CORRIDOR IS UNOCCUPIED.

SITE LIGHTING CONTROL CIRCUIT SCHEDULE

RELAY #	AREA SERVED	CIRCUIT CONNECTIONS: PANEL	CIRCUIT	SWITCH LEG	NORMAL POWER	EMERG RELAY	SENSOR CONTROL	PHOTO CONTROL	TIME CLOCK	DESCRIPTION
1	WALKWAY LIGHTING ---	OLP	--	A	✓				✓	--
2	WALKWAY LIGHTING ---	OLP	--	B	✓				✓	--
3	ROADWAY LIGHTING ---	OLP	--	C	✓		✓	✓	✓	--
4	PARKING LOT LIGHTING ---	OLP	--	D	✓		✓	✓	✓	--
5	PARKING LOT LIGHTING ---	OLP	--	E	✓		✓	✓	✓	--
6	ROADWAY LIGHTING ---	OLP	--	F	✓		✓	✓	✓	--
7	WALKWAY LIGHTING ---	OLP	--	G	✓				✓	--
8	PARKING LOT LIGHTING ---	OLP	--	H	✓		✓	✓	✓	--
9	PARKING LOT LIGHTING ---	OLP	--	J	✓		✓	✓	✓	--
10	ROADWAY LIGHTING ---	OLP	--	K	✓		✓	✓	✓	--
11	BUILDING SECURITY LIGHTING ---	EOLP	1	L		✓			✓	--
12	BUILDING SECURITY LIGHTING ---	EOLP	1	M		✓			✓	--
13	FLAG POLE LIGHTING ---	OLP	--	N	✓				✓	--

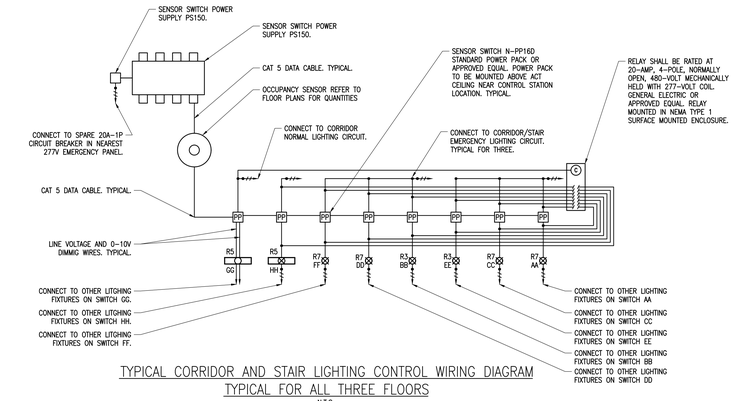

TYPICAL CORRIDOR AND STAIR LIGHTING CONTROL WIRING DIAGRAM
TYPICAL FOR ALL THREE FLOORS
N.T.S.

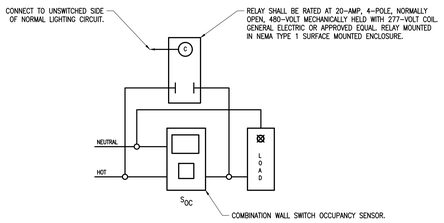

LINE VOLTAGE COMBINATION WALL SWITCH/OCCUPANCY SENSOR
ON EMERGENCY CIRCUIT WIRING DIAGRAM. TYPICAL FOR MUSIC PRACTICE ROOMS, SMALL OFFICES, TOILETS, ETC.
N.T.S.

LIBRARY LIGHTING CONTROL CIRCUIT SCHEDULE

RELAY #	AREA SERVED	CIRCUIT CONNECTIONS: PANEL	CIRCUIT	SWITCH LEG	NORMAL POWER	EMERG RELAY	SENSOR CONTROL	PHOTO CONTROL	CONTROL STATION	DESCRIPTION
1	LIBRARY ---	LPGB	4	LA	✓		✓	✓	--	--
2	LIBRARY ---	LPGB	4	LB	✓		✓	✓	--	--
3	LIBRARY ---	LPGB	4	LC	✓		✓	✓	--	--
4	LIBRARY ---	ELSDP1	15	LD		✓	✓	✓	--	--
5	LIBRARY ---	ELSDP1	15	LE		✓	✓	✓	--	--
6	LIBRARY ---	ELSDP1	15	LF		✓	✓		--	--
7	LIBRARY ---	ELSDP1	15	LG		✓	✓		--	--
8	LIBRARY ---	LPBG	4	LH	✓		✓		--	--
9	LIBRARY ---	ELSDP1	15	LJ		✓	✓		--	--
10	LIBRARY ---	LPGB	4	LK	✓		✓		--	--
11	LIBRARY ---	ELSDP1	15	LL		✓	✓		--	--
12	SPARE ---	--	--		✓				--	--
13	SPARE ---	--	--		✓				--	--
14	SPARE ---	--	--		✓				--	--
15	SPARE ---	--	--		✓				--	--
16	SPARE ---	--	--		✓				--	--

CLASSROOM LIGHTING CONTROL CIRCUIT SCHEDULE

BUTTON #	AREA SERVED	SWITCH LEG	NORMAL POWER	EMERG RELAY	SENSOR CONTROL	PHOTO CONTROL	AUTO OFF	CONTROL STATION	DESCRIPTION
1	EXTERIOR PENDANT ---	A	✓		VACANCY	ZONE 1	15 MIN	DS1	---
2	MIDDLE PENDANT ---	B		✓	VACANCY	ZONE 2	15 MIN	DS1	---
3	MIDDLE PENDANT ---	C		✓	VACANCY	ZONE 2	15 MIN	DS1	---
4	INTERIOR PENDANT ---	D	✓		VACANCY	---	15 MIN	DS1	---

BUILDING LIGHTING CONTROL CIRCUIT SCHEDULE

RELAY #	AREA SERVED	CIRCUIT CONNECTIONS: PANEL	CIRCUIT	SWITCH LEG	NORMAL POWER	EMERG RELAY	SENSOR CONTROL	PHOTO CONTROL	CONTROL STATION	DESCRIPTION
1	STAIR C ---	ELSDP1	1	AA		✓	✓		--	--
2	STAIR C ---	ELSDP1	3	BB		✓	✓		--	--
3	STAIR B ---	ELSDP1	1	CC		✓	✓		--	--
4	STAIR B ---	ELSDP1	3	DD		✓	✓		--	--
5	GROUND FLOOR CORRIDOR ACADEMIC	ELSDP1	6	EE		✓	✓		--	--
6	GROUND FLOOR CORRIDOR ACADEMIC	LP1A	13	FF	✓		✓		--	--
7	FIRST FLOOR CORRIDOR ACADEMIC	ELSDP1	8	GG		✓	✓		--	--
8	FIRST FLOOR CORRIDOR ACADEMIC	LP1A	15	HH	✓		✓		--	--
9	SECOND FLOOR CORRIDOR ACADEMIC	ELSDP1	7	JJ		✓	✓		--	--
10	SECOND FLOOR CORRIDOR ACADEMIC	LP1A	14	KK	✓		✓		--	--
11	GROUND FLOOR CORRIDOR COMMUNITY	ELSDP1	9	LL		✓	✓		--	--
12	GROUND FLOOR CORRIDOR COMMUNITY	LPGB	--	MM	✓		✓		--	--
13	FIRST FLOOR CORRIDOR COMMUNITY	ELSDP1	10	NN		✓	✓		--	--
14	FIRST FLOOR CORRIDOR COMMUNITY	LPGB	--	PP	✓		✓		--	--
15	SECOND FLOOR CORRIDOR COMMUNITY	ELSDP1	11	QQ		✓	✓		--	--
16	SECOND FLOOR CORRIDOR COMMUNITY	LPGB	--	RR	✓		✓		--	--
17	--- ---	--	--	TT	✓				--	--
18	--- ---	--	--	VV	✓				--	--
19	--- ---	--	--	WW	✓				--	--
20	--- ---	--	--	XX	✓				--	--
21	--- ---	--	--	YY	✓				--	--
22	--- ---	--	--	ZZ	✓				--	--
23	--- ---	--	--	--	✓				--	--
24	--- ---	--	--	--	✓				--	--

GYMNASIUM LIGHTING CONTROL CIRCUIT SCHEDULE

RELAY #	AREA SERVED	CIRCUIT CONNECTIONS: PANEL	CIRCUIT	SWITCH LEG	NORMAL POWER	EMERG RELAY	SENSOR CONTROL	PHOTO CONTROL	CONTROL STATION	DESCRIPTION
1	GYMNASIUM ---	LPGB	2	GA	✓		✓	✓	--	--
2	GYMNASIUM ---	ELSDP1	17	GB		✓	✓	✓	--	--
3	GYMNASIUM ---	LPGB	2	GC	✓		✓	✓	--	--
4	GYMNASIUM ---	ELSDP1	17	GD		✓	✓	✓	--	--
5	GYMNASIUM ---	LPGB	2	GE	✓		✓	✓	--	--
6	GYMNASIUM ---	LPGB	2	GF	✓		✓	✓	--	--

CAFETERIA LIGHTING CONTROL CIRCUIT SCHEDULE

RELAY #	AREA SERVED	CIRCUIT CONNECTIONS: PANEL	CIRCUIT	SWITCH LEG	NORMAL POWER	EMERG RELAY	SENSOR CONTROL	PHOTO CONTROL	CONTROL STATION	DESCRIPTION
1	CAFETERIA ---	--	--	CA	✓		✓		--	--
2	CAFETERIA ---	--	--	CB	✓		✓		--	--
3	CAFETERIA ---	--	--	CC	✓		✓		--	--
4	CAFETERIA ---	--	--	CD	✓		✓		--	--
5	CAFETERIA ---	--	--	CE	✓		✓		--	--
6	CAFETERIA ---	--	--	CF	✓		✓		--	--
7	CAFETERIA ---	--	--	CG	✓				--	--
8	CAFETERIA ---	--	--	CH	✓				--	--
9	CAFETERIA ---	--	--	CJ	✓				--	--
10	CAFETERIA ---	--	--	CK	✓				--	--
11	CAFETERIA ---	--	--	CL	✓				--	--
12	CAFETERIA ---	--	--	CM	✓				--	--
13	CAFETERIA ---	--	--	CN	✓				--	--
14	CAFETERIA ---	--	--	CP	✓				--	--
15	CAFETERIA ---	--	--	CQ	✓				--	--
16	CAFETERIA ---	--	--	CR	✓				--	--

PROJECT AREA LIGHTING CONTROL CIRCUIT SCHEDULE

RELAY #	AREA SERVED	CIRCUIT CONNECTIONS: PANEL	CIRCUIT	SWITCH LEG	NORMAL POWER	EMERG RELAY	SENSOR CONTROL	PHOTO CONTROL	CONTROL STATION	DESCRIPTION
1	PROJECT AREA C206B ---	LP1A	14	BA	✓		✓		--	--
2	PROJECT AREA C206B ---	ELSDP1	7	BB		✓	✓		--	--
3	PROJECT AREA C206B ---	LP1A	14	BC	✓		✓		--	--
4	PROJECT AREA C206A ---	LP1A	14	BD	✓		✓		--	--
5	PROJECT AREA C206A ---	ELSDP1	7	BE		✓	✓		--	--
6	PROJECT AREA C206A ---	LP1A	14	BF	✓		✓		--	--
7	PROJECT AREA C204B ---	LP1A	14	BG	✓		✓		--	--
8	PROJECT AREA C204B ---	ELSDP1	7	BH		✓	✓		--	--
9	PROJECT AREA C204B ---	LP1A	14	BJ	✓		✓		--	--
10	PROJECT AREA C204A ---	LP1A	14	BK	✓		✓		--	--
11	PROJECT AREA C204A ---	ELSDP1	7	BL		✓	✓		--	--
12	PROJECT AREA C204A ---	LP1A	14	BM	✓		✓		--	--
13	PROJECT AREA C106B ---	LP1A	15	BN	✓		✓		--	--
14	PROJECT AREA C106B ---	ELSDP1	8	BO		✓	✓		--	--
15	PROJECT AREA C106B ---	LP1A	15	BP	✓		✓		--	--
16	PROJECT AREA C106A ---	LP1A	15	BQ	✓		✓		--	--
17	PROJECT AREA C106A ---	ELSDP1	8	BR		✓	✓		--	--
18	PROJECT AREA C106A ---	LP1A	15	BS	✓		✓		--	--
19	PROJECT AREA C104B ---	LP1A	15	BT	✓		✓		--	--
20	PROJECT AREA C104B ---	ELSDP1	8	BU		✓	✓		--	--
21	PROJECT AREA C104B ---	LP1A	15	BW	✓		✓		--	--
22	PROJECT AREA C104A ---	LP1A	15	BX	✓		✓		--	--
23	PROJECT AREA C104A ---	ELSDP1	8	BY		✓	✓		--	--
24	PROJECT AREA C104A ---	LP1A	15	BZ	✓		✓		--	--
25	PROJECT AREA C006B ---	LP1A	13	BAA	✓		✓		--	--
26	PROJECT AREA C006B ---	LP1A	13	BBB	✓		✓		--	--
27	PROJECT AREA C006A ---	LP1A	13	BCC	✓		✓		--	--
28	PROJECT AREA C006A ---	LP1A	13	BDD	✓		✓		--	--
29	PROJECT AREA C004B ---	LP1A	13	BEE	✓		✓		--	--
30	PROJECT AREA C004B ---	LP1A	13	BFF	✓		✓		--	--
31	PROJECT AREA C004A ---	LP1A	13	BGG	✓		✓		--	--
32	PROJECT AREA C004A ---	LP1A	13	BHH	✓		✓		--	--

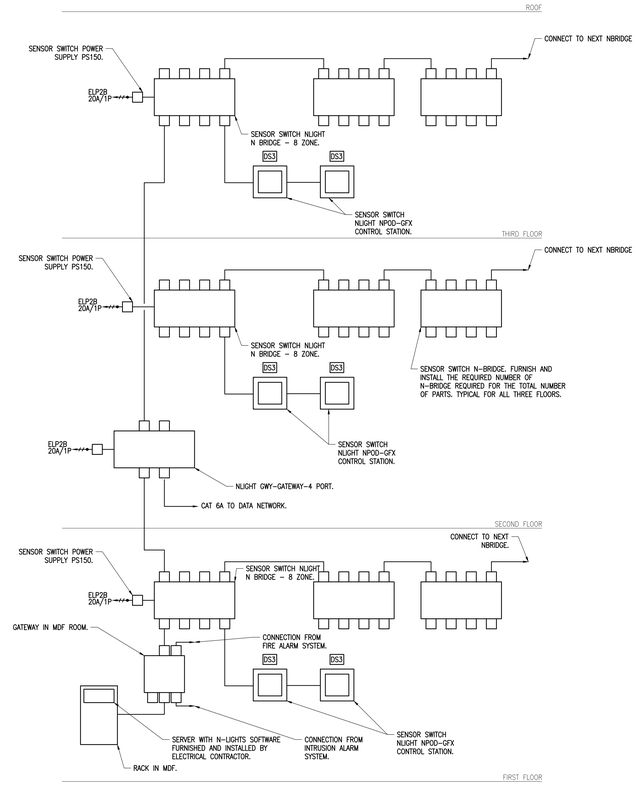

LIGHTING CONTROL GATEWAY AND BRIDGE
WIRING DIAGRAM
N.T.S.

NOTES

1 – ELECTRICAL CONTRACTOR TO FURNISH AND INSTALL A COMPLETE SENSOR SWITCH N-LIGHT LIGHTING CONTROL SYSTEM WITH ALL REQUIRED EQUIPMENT AND WIRING. REFER TO SPECIFICATION. ELECTRICAL CONTRACTOR TO FURNISH AND INSTALL A RACK MOUNTED SERVER WITH UPS IN THE MDF ROOM TO RUN THE N-LIGHTS SOFTWARE. ELECTRICAL CONTRACTOR TO FURNISH AND INSTALL ALL REQUIRED SERVERS, EQUIPMENT AND SOFTWARE TO OPERATE THE SOFTWARE SYSTEM. APPROVED MANUFACTURERS ARE SENSOR SWITCH, WATTSTOPPER, AND LC&D OR APPROVED EQUAL.

2 – ELECTRICAL CONTRACTOR TO PROGRAM SYSTEM IN ACCORDANCE WITH OWNERS REQUIREMENTS.

3 – GATEWAY TO BE INSTALLED IN MDF ROOM. N-BRIDGES TO BE INSTALLED IN MDF ROOM OR IDF CLOSETS. POWER AND SLAVE PACKS TO BE INSTALLED ABOVE ACT CEILING NEAR 4-SCENE CONTROL STATIONS. GYMNASIUM POWER AND SLAVE PACKS TO BE LOCATED IN ELECTRICAL ROOMS.

4 – ALL WIRING PER MANUFACTURERS REQUIREMENTS.

5 – ALL OCCUPANCY SENSORS TO BE SET AT 15-MINUTE DELAY TO OFF.

6 – PROVIDE CONNECTION TO FIRE ALARM AND INTRUSION ALARM SYSTEMS TO RAISE LIGHTS IN CORRIDORS AND STAIRWELLS TO FULL BRILLIANCY DURING ALARM CONDITIONS.

7 – ELECTRICAL CONTRACTOR INCLUDING MANUFACTURING REPRESENTATIVE TO PROVIDE A MINIMUM OF 32 HOURS TO MEET WITH OWNER AND ARCHITECT, COORDINATE WITH OWNER AND PROGRAM THE SYSTEM. TOTAL OF 64 HOURS BETWEEN CONTRACTOR AND MANUFACTURER'S SERVICE COMPANY.

LIGHTING SENSOR SYSTEM NOTES

1 – ALL SENSOR WIRING SHALL BE INSTALLED IN ACCORDANCE WITH THE MANUFACTURER'S WIRING DIAGRAMS AND RECOMMENDATIONS.

2 – REFER TO THE LIGHTING FLOOR PLANS FOR THE EXACT TYPE OF LIGHTING SENSOR TO BE INSTALLED IN EACH ROOM.

3 – LIGHTING SENSOR SHALL BE INSTALLED IN ACCORDANCE WITH THE MANUFACTURER'S SPECIFICATIONS AND RECOMMENDATIONS FOR INSTALLATION AND MOUNTING HEIGHTS.

4 – REFER TO MANUFACTURER'S SPECIFICATION SHEETS AND WIRING DIAGRAMS FOR THE MAXIMUM NUMBER OF SENSORS PER POWER PACK.

5 – POWER PACKS AND SLAVE PACKS SHALL BE INSTALLED ON THE OUTSIDE OF JUNCTION BOXES. JUNCTION BOXES SHALL BE MOUNTED ABOVE DROPPED CEILING AREA DIRECTLY ABOVE THE ROOM LIGHTING SWITCH LOCATION.

6 – ALL LIGHTING SENSOR TIME DELAYS SHALL BE SET TO FIFTEEN (15) MINUTES UNLESS OTHERWISE NOTED.

7 – ALL LIGHTING FIXTURE SENSOR UNITS, POWER AND SLAVE PACKS SHALL BE AS MANUFACTURED BY THE WATT STOPPER CORP. OR APPROVED EQUAL.

8 – ALL LIGHTING CIRCUIT WIRING INCLUDING SENSOR CONTROL WIRING SHALL BE INSTALLED IN CONDUIT FOR EXPOSED CEILINGS AND MC CABLE IN CONCEALED CEILING.

9 – REFER TO ELECTRICAL SPECIFICATIONS.

10 – ALL LIGHTING SENSOR SHALL BE MOUNTED A MINIMUM OF 4'-0" AWAY FROM ALL HVAC DIFFUSERS. REFER TO THE MANUFACTURER'S SPECIFICATION SHEET FOR EXACT DETAILS ON REQUIREMENTS FOR MOUNTING LIGHTING SENSORS.

11 – FURNISH AND INSTALL ALL REQUIRED POWER AND SLAVE PACKS REQUIRED FOR EACH ROOM.

12 – FURNISH AND INSTALL PROTECTIVE CAGES ON ALL OCCUPANCY SENSORS IN ALL GYMNASIUM LOCKER ROOMS, AND TEAM ROOMS. TYPICAL FOR ALL.

13 – ALL SENSORS EXCEPT IN TOILETS, CORRIDORS AND STAIRS SHALL BE PROGRAMMED AS VACANCY SENSORS (MANUAL ON, AUTO OFF). ALL SENSORS IN TOILETS, CORRIDORS, AND STAIRS TO BE PROGRAMMED AS OCCUPANCY SENSORS (AUTO ON-OFF).

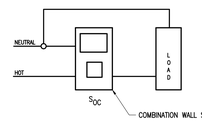

LINE VOLTAGE COMBINATION WALL SWITCH/OCCUPANCY SENSOR
WIRING DIAGRAM. TYPICAL FOR STORAGE ROOMS, JANITORS CLOSETS, ETC.
N.T.S.

AMESBURY ELEMENTARY SCHOOL

AMESBURY, MA

DINISCO DESIGN architects + planners
99 Chauncy Street, Suite 901
Boston, MA 02111
(617) 426-2858

DGT Associates
Surveying & Engineers
1071 Worcester Road
Framingham, MA 01701
(508) 879-0030

Brown Sardina, Inc.
Landscape Architects
24 Roland Street
Boston, MA 02129
(617) 482-4703

Foley Buhl Roberts & Assoc., Inc.
Structural Engineers
2150 Washington Street
Newton, MA 02462
(617) 527-9600

Crabtree McGrath Assoc., Inc.
Food Service Consultants
161 West Main Street
Georgetown, MA 01833
(978) 352-8500

VAV International, Inc.
Mechanical Engineers
400 West Cummings Park S. 4700
Woburn, MA 01801
(781) 935-7228

Thompson Engineering Company, Inc.
Electrical Engineers
89 Newbury Street, Suite 103
Danvers, MA 01923
(617) 866-9066

EdVance Technology Design, Inc.
Technology Consultants
300 Brickstone Square, Suite 201
Andover, MA 01880
(978) 256-9900

KEY PLAN

NORTH ARROW | STAMP

Date: 21 August 2020

Drawn By: JM, TD, EG

Scale: N.T.S.

Revisions

Number	Date	Description

90% COST ESTIMATE SET

Lighting Control Details Sheet #1

10.3.07

© 2020 DiNisco Design

I:\18021 - Amesbury Elementary School\10.3.07.dwg, 8/14/2020 3:51:06 PM

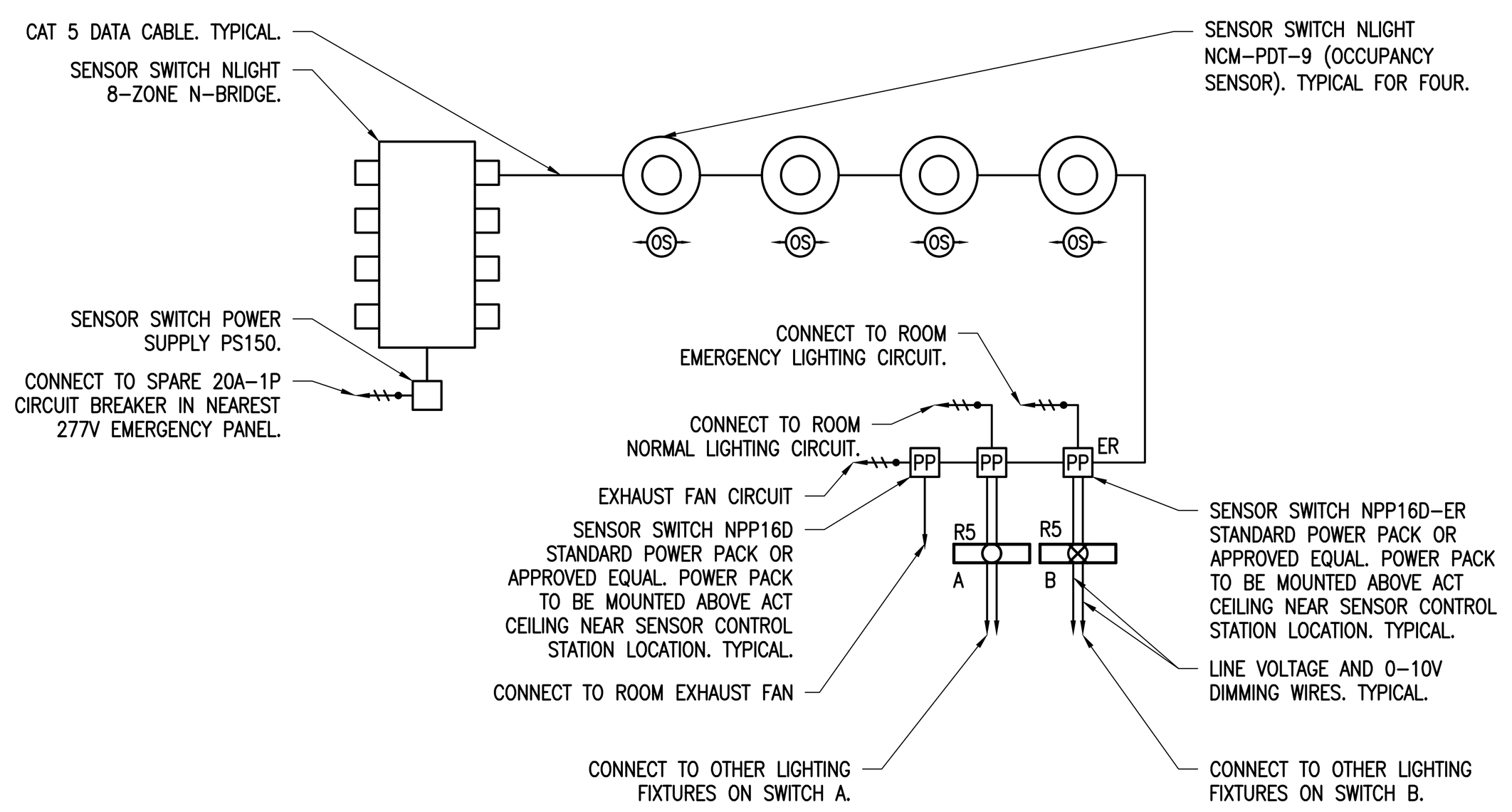

TYPICAL TOILET OCCUPANCY SENSOR WIRING DIAGRAM
N.T.S.

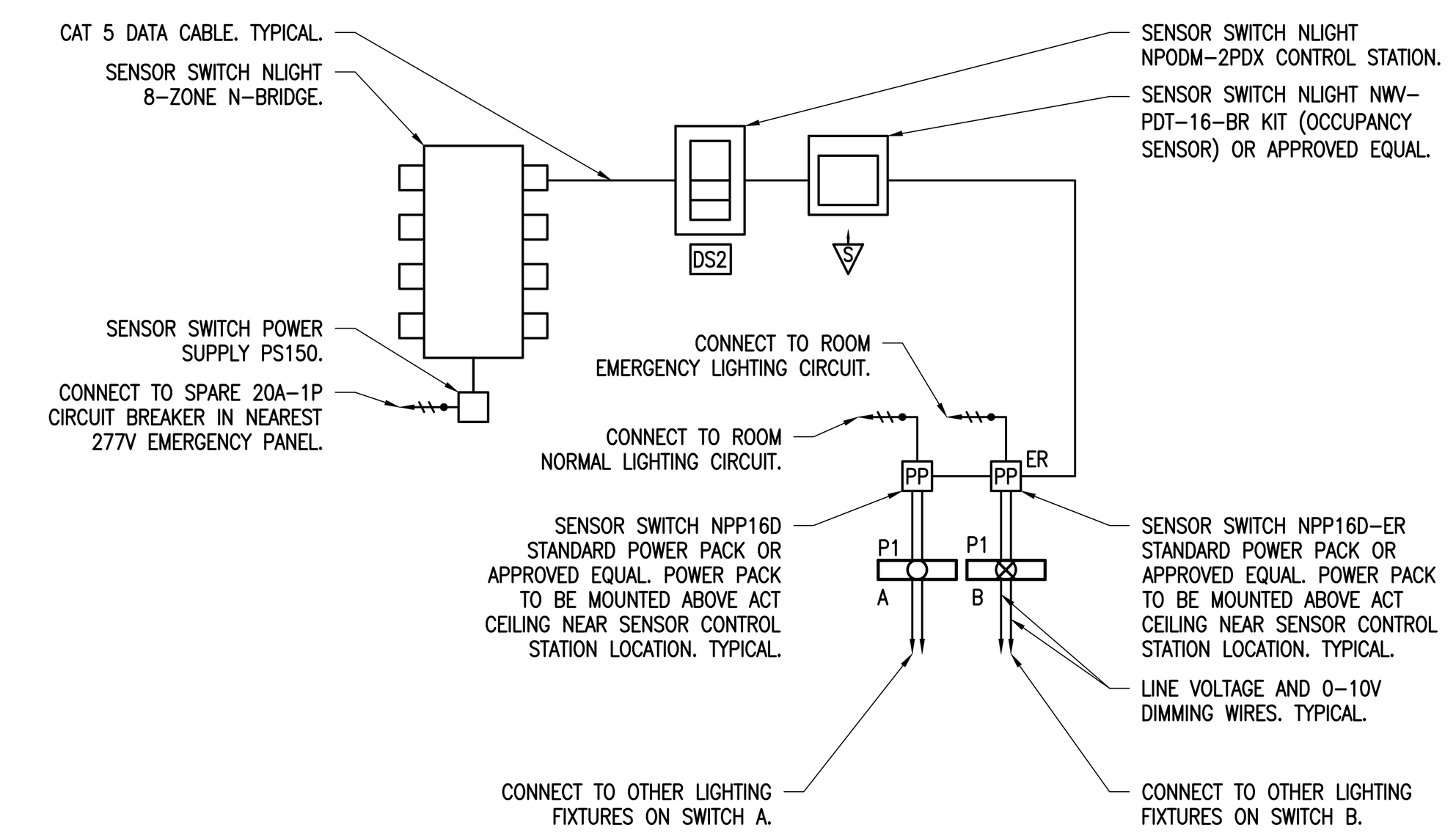

TYPICAL CONFERENCE ROOM WITH OCCUPANCY SENSOR WIRING DIAGRAM
N.T.S.

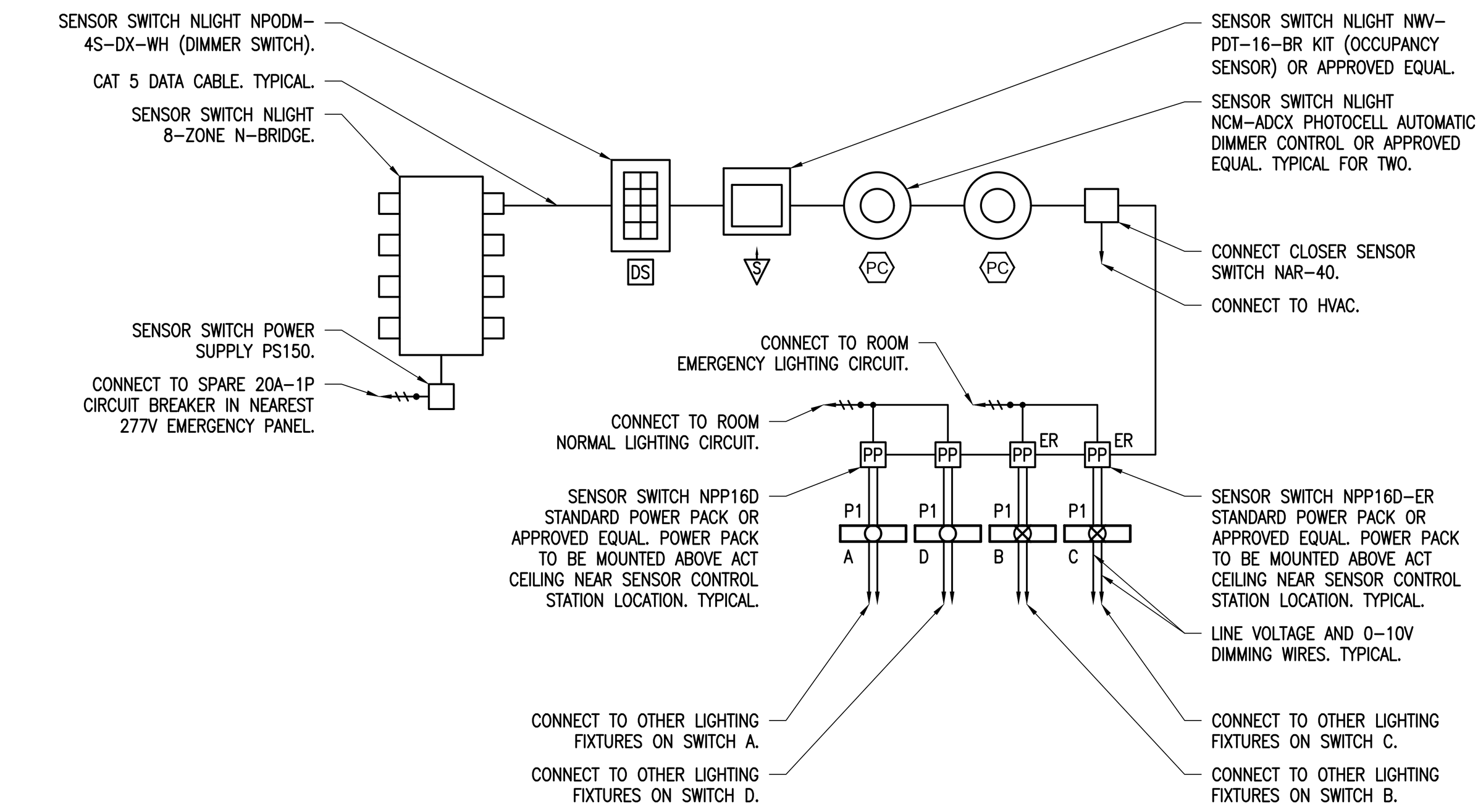

TYPICAL EXTERIOR CLASSROOM WITH OCCUPANCY SENSOR, PHOTOCELL, & DIMMING CONTROL WIRING DIAGRAM
N.T.S.

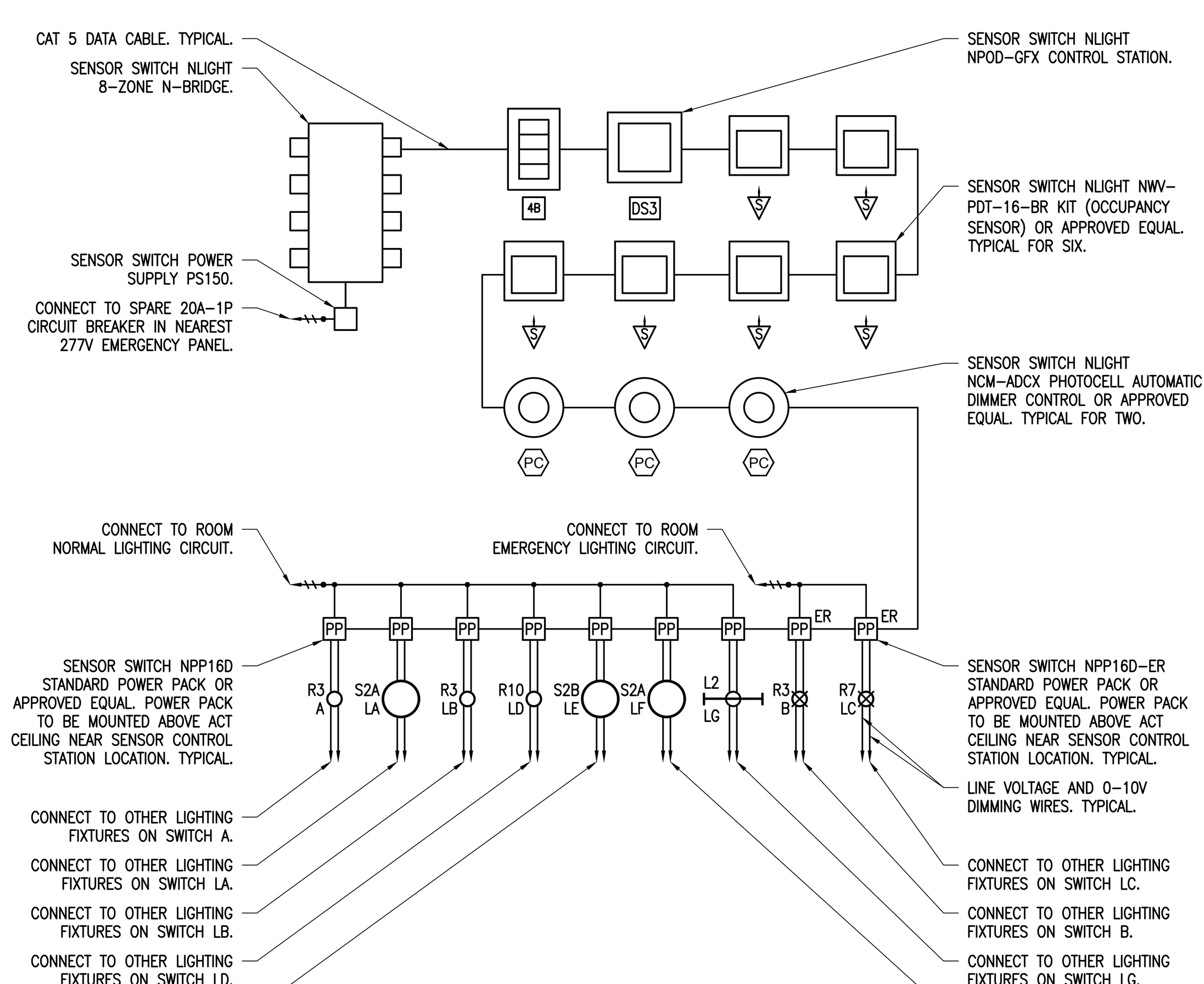

LIBRARY OCCUPANCY SENSOR AND DAYLIGHTING WIRING DIAGRAM
N.T.S.

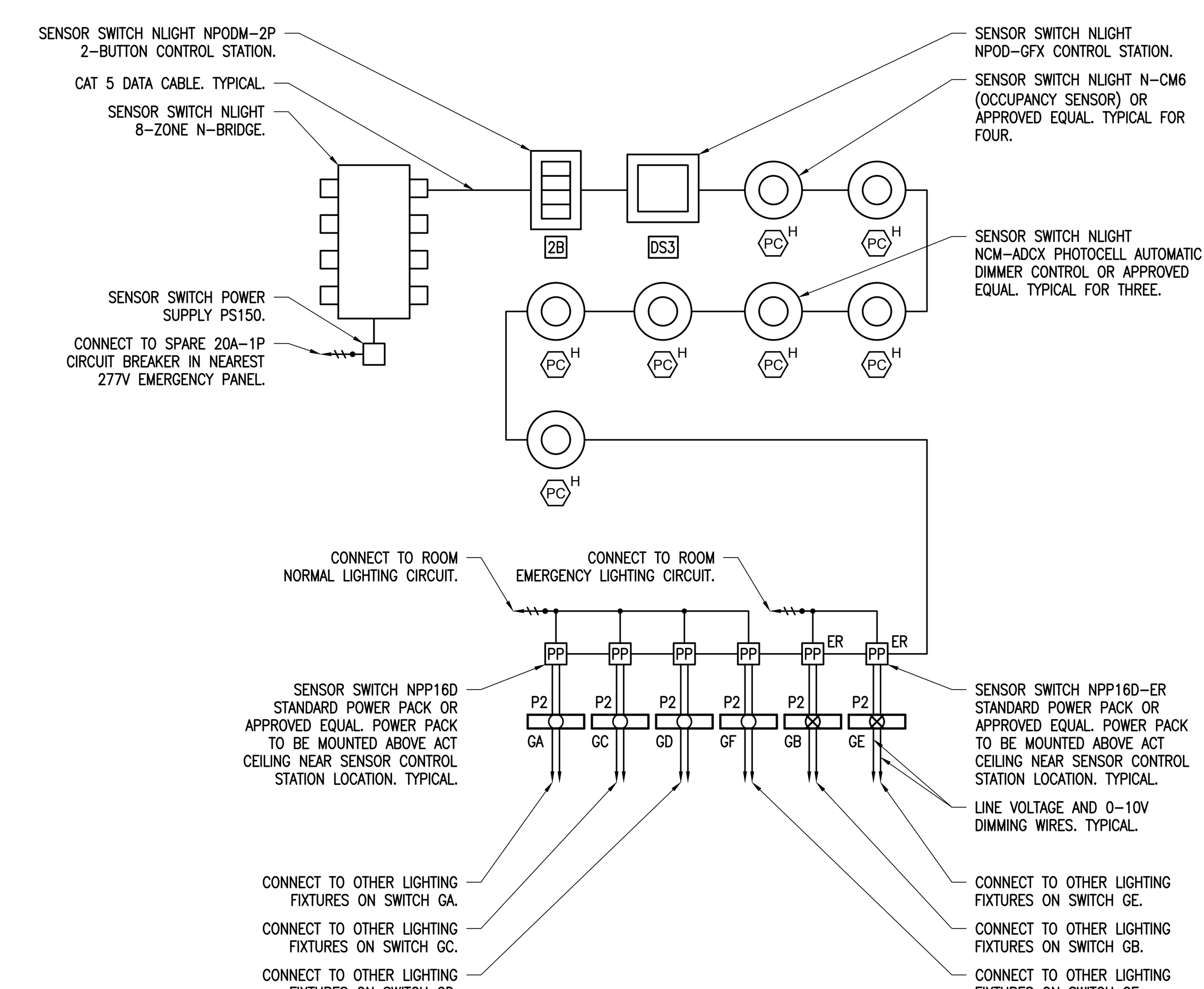

GYMNASIUM OCCUPANCY SENSOR AND DAYLIGHTING WIRING DIAGRAM
N.T.S.

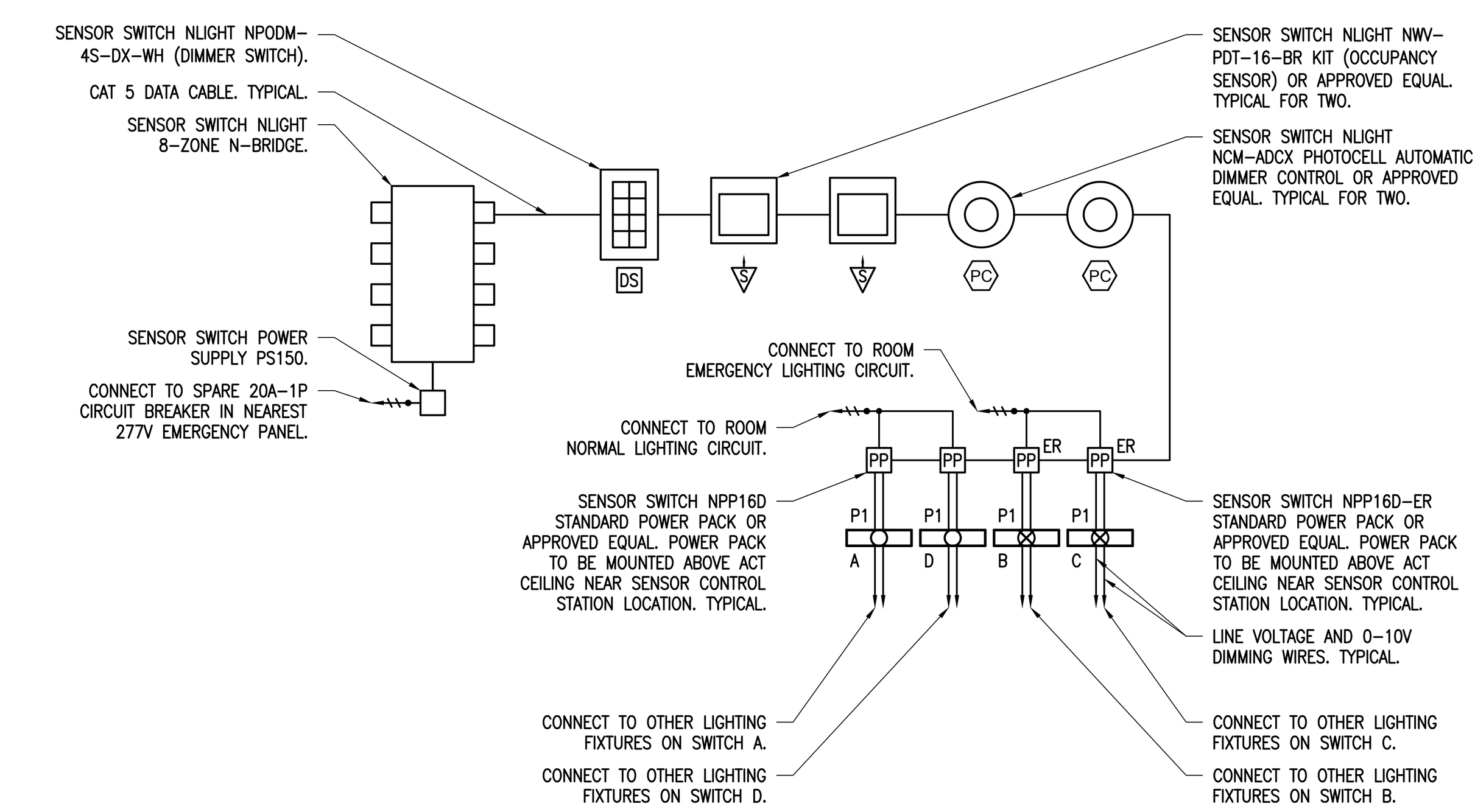

TYPICAL ART/MUSIC CLASSROOM WITH OCCUPANCY SENSOR, PHOTOCELL, & DIMMING CONTROL WIRING DIAGRAM
N.T.S.

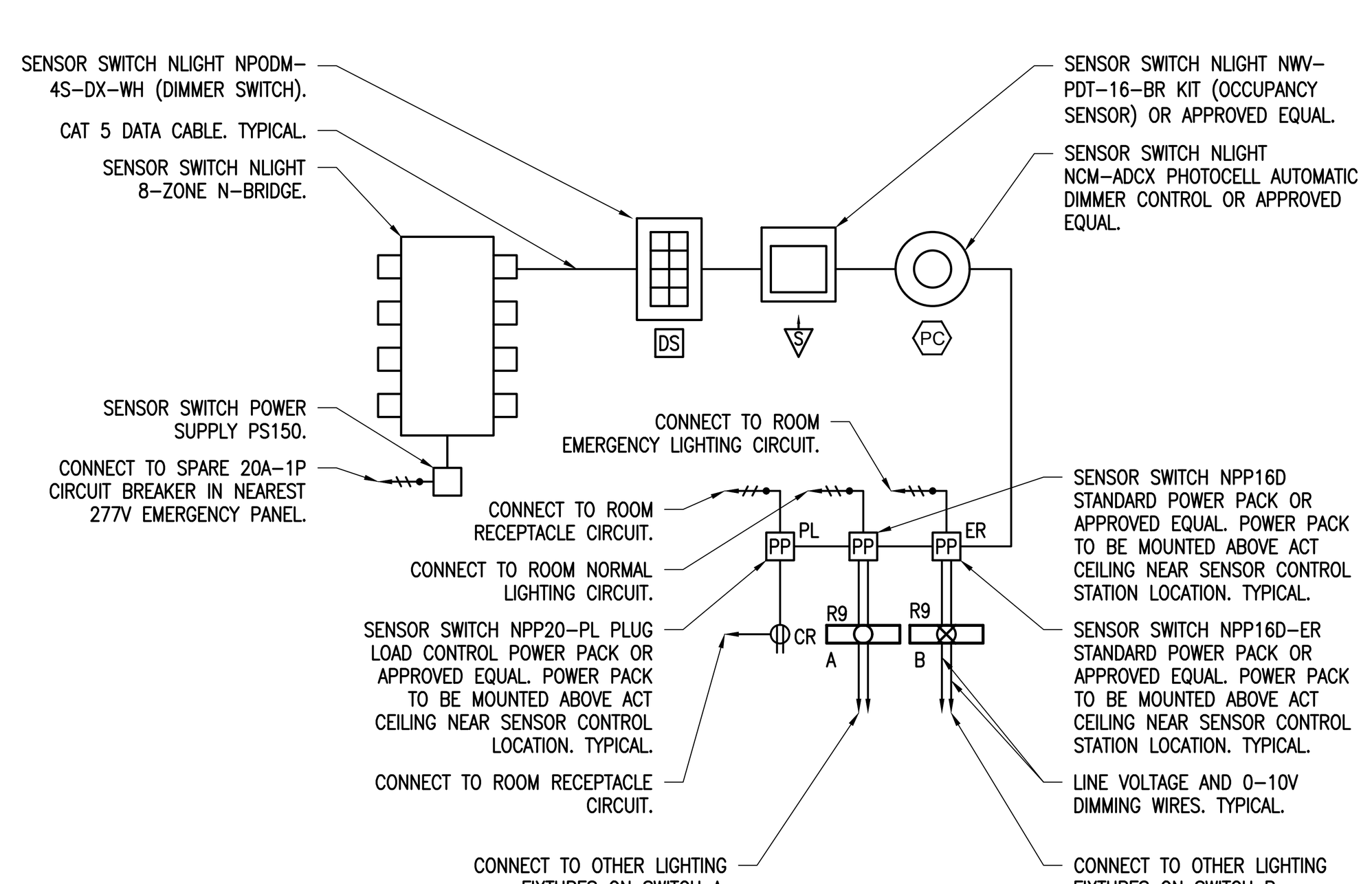

TYPICAL OFFICE WITH OCCUPANCY SENSOR WIRING DIAGRAM
N.T.S.

NOTES

1 - IN ALL OFFICES OF THE BUILDING, ALL CONTROLLED RECEPTACLES WITHTHE 'CR' SYMBOL SHALL BE CONNECTED TO THE ROOM'S LIGHTING CONTROL SYSTEM. THE RECEPTACLES SHALL BE DE-ENERGIZED DURING OFF HOURS PER A PROGRAMMED SCHEDULE. THE ELECTRICAL CONTRACTOR SHALL FURNISH AND INSTALL ALL REQUIRED RELAYS, CONDUIT, AND WIRE TO CONTROL THESE RECEPTACLES VIA THE LIGHTING CONTROL SYSTEM. REFER TO FLOOR PLANS FOR LOCATIONS.

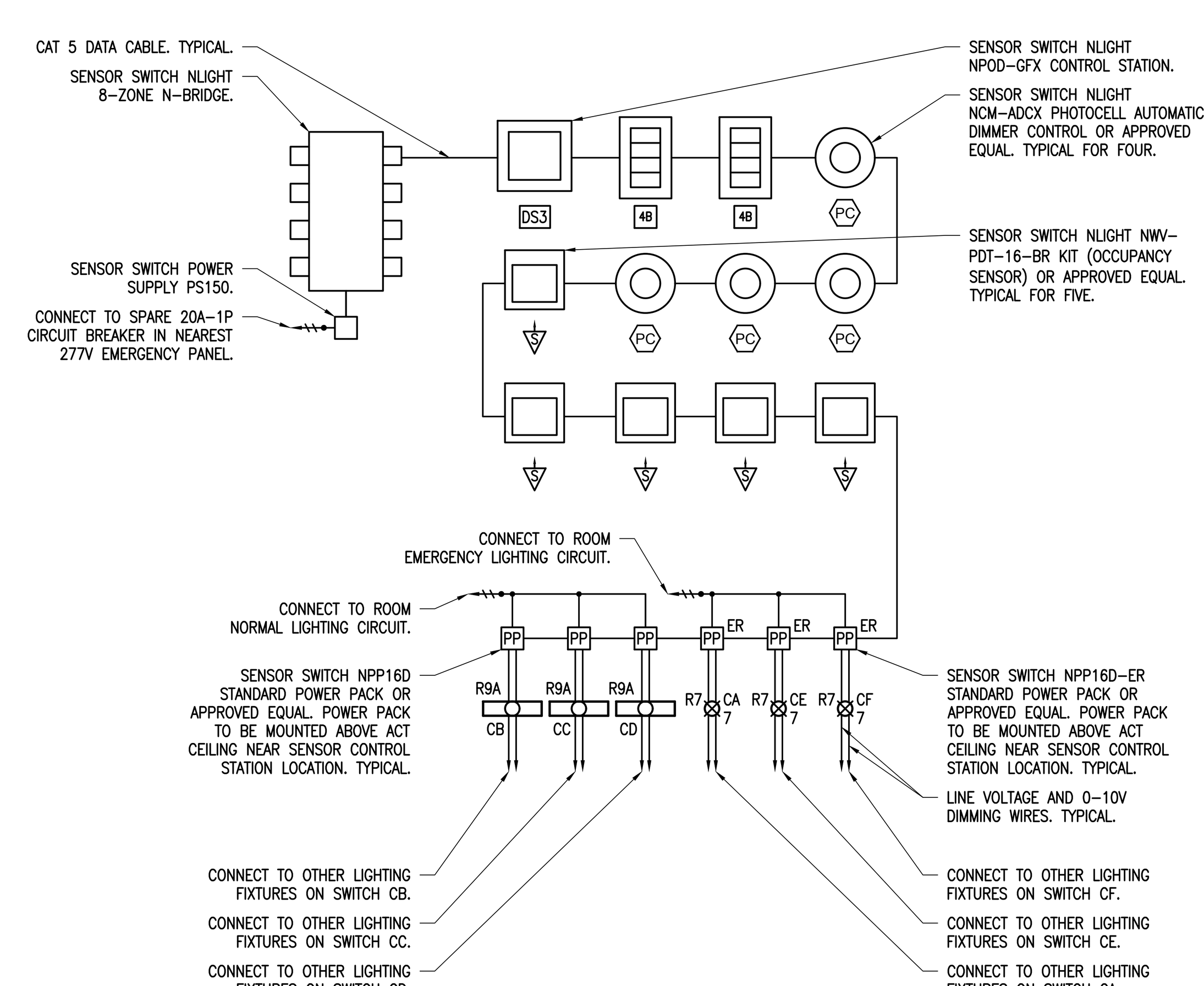

CAFETERIA OCCUPANCY SENSOR AND DAYLIGHTING WIRING DIAGRAM
N.T.S.

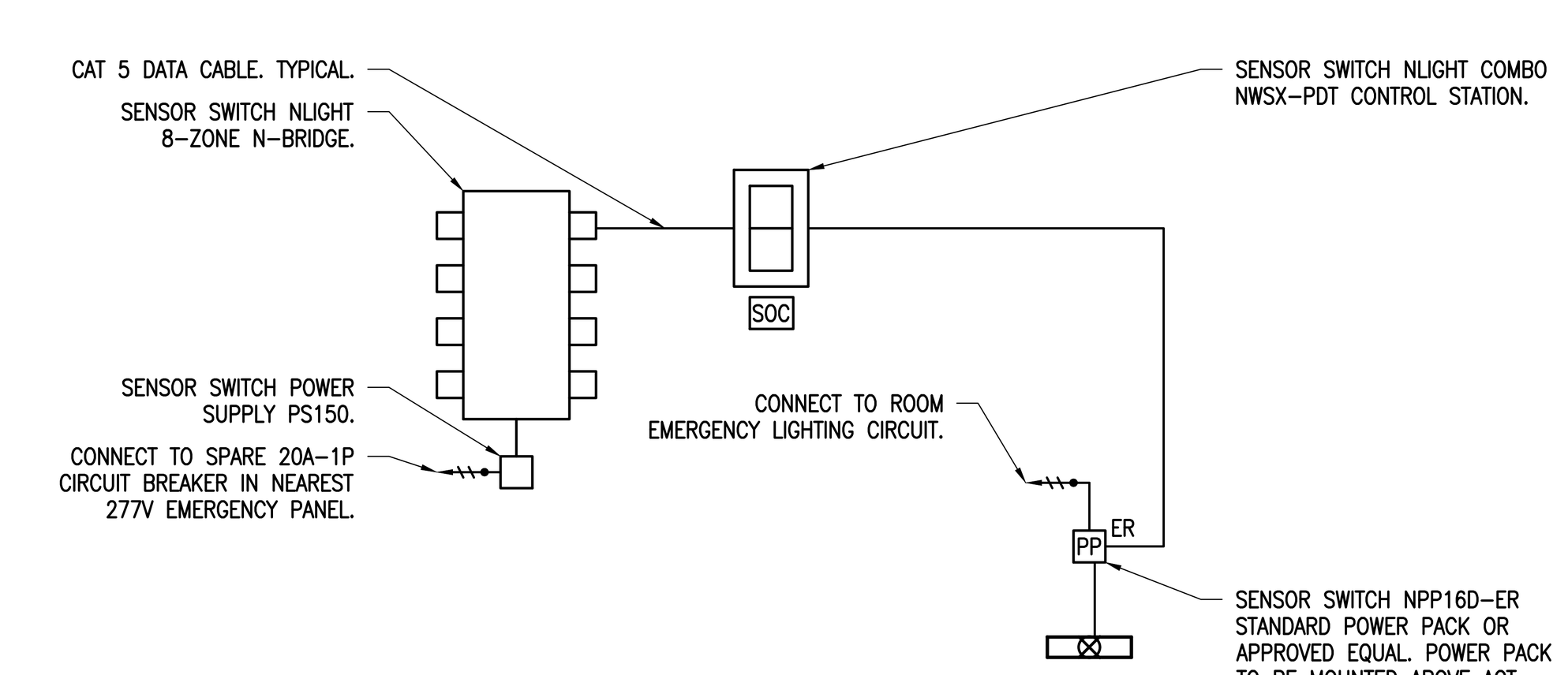

TYPICAL SMALL TOILETS WITH OCCUPANCY SENSOR/SWITCH WIRING DIAGRAM
N.T.S.

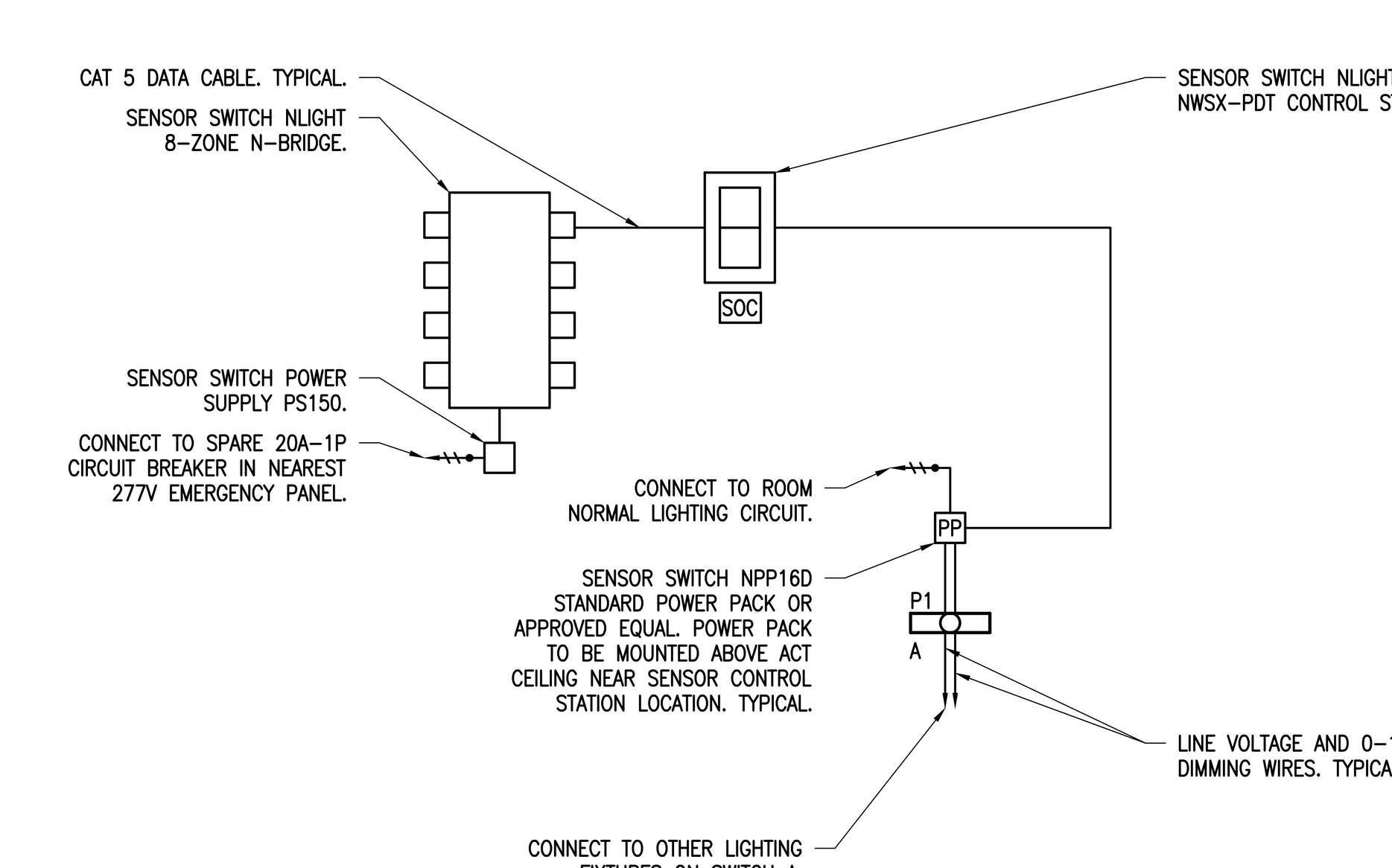

TYPICAL STORAGE/SMALL OFFICES WITH OCCUPANCY SENSOR WIRING DIAGRAM
N.T.S.

AMESBURY ELEMENTARY SCHOOL

AMESBURY, MA

DINISCO DESIGN
architects + planners
99 Chauncy Street, Suite 901
Boston, MA 02111
(617) 426-2858

DGT Associates
Surveying & Engineers
1071 Worcester Road
Framingham, MA 01701
(508) 879-0030

Brown Sardina, Inc.
Landscape Architects
24 Roland Street
Boston, MA 02129
(617) 482-4703

Foley Buhl Roberts & Assoc., Inc.
Structural Engineers
2150 Washington Street
Newton, MA 02462
(617) 527-9600

Crabtree McGrath Assoc., Inc.
Food Service Consultants
161 West Main Street
Georgetown, MA 01833
(978) 352-8500

VAV International, Inc.
Mechanical Engineers
400 West Cummings Park S. 4700
Woburn, MA 01801
(781) 935-7228

Thompson Engineering Company, Inc.
Electrical Engineers
89 Newbury Street, Suite 103
Danvers, MA 01923
(617) 866-9066

EdVance Technology Design, Inc.
Technology Consultants
300 Brickstone Square, Suite 201
Andover, MA 01880
(978) 256-9900

KEY PLAN

NORTH ARROW

STAMP

Date: 21 August 2020

Drawn By: **JM, TD, EG**

Scale: N.T.S.

Revisions

Number	Date	Description

90% COST ESTIMATE SET

Lighting Control Details Sheet #2

10.3.08

© 2020 DiNisco Design

I:\18011 - Amesbury Elementary School\10.3.08.dwg / 8/14/2020 3:51:13 PM

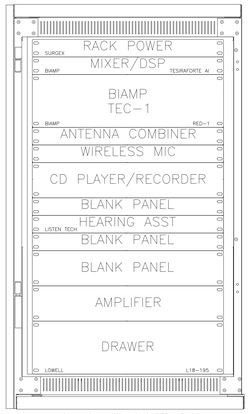

GYMNASIUM SOUND SYSTEM RACK

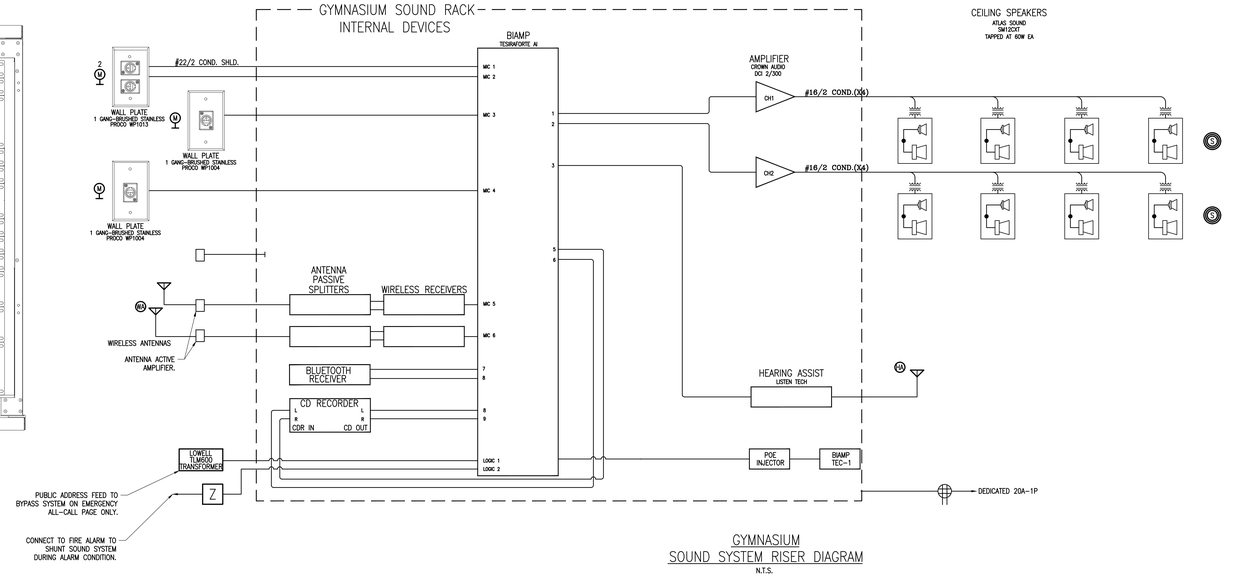

GYMNASIUM
SOUND SYSTEM RISER DIAGRAM
N.T.S.

GYMNASIUM SOUND SYSTEMS NOTES

1 – THE AMPLIFIERS, CD RECORDER, MIXER, EQUALIZER, COMPRESSOR/LIMITER, WIRELESS MICROPHONE RECEIVER, ASSISTIVE LISTENING SYSTEM TRANSMITTER, AND POWER STRIP SHALL BE INSTALLED IN AN EQUIPMENT RACK WITH LOCKING FRONT HINGED DOOR. REFER TO SPECIFICATIONS.

2 – FURNISH AND INSTALL A COMPACT DISC (CD) PLAYER/RECORDER WITH UNIVERSAL RACK MOUNTING KIT. REFER TO SPECIFICATIONS.

3 – FURNISH AND INSTALL WIRELESS MICROPHONE RECEIVERS WITH REMOTE ANTENNA FOR OPTIMAL PERFORMANCE.

4 – FURNISH AND INSTALL AN ASSISTIVE LISTENING SYSTEM TRANSMITTER. REFER TO SPECIFICATIONS.

5 – THE ELECTRICAL SUBCONTRACTOR SHALL FURNISH PORTABLE FM RECEIVERS WITH DUAL EARPHONES. PROVIDE THE REQUIRED ANTENNA CABLE. REFER TO SPECIFICATIONS.

6 – THE WIRELESS MICROPHONE RECEIVER AND THE ASSISTIVE LISTENING SYSTEM TRANSMITTER FOR THE GYMNASIUM SOUND SYSTEMS SHALL BE FURNISHED WITH DIFFERENT OPERATING FREQUENCIES SO THAT EACH SYSTEM CAN OPERATE SIMULTANEOUSLY WITHOUT INTERFERENCE FROM THE CAFETERIA SYSTEM.

7 – FURNISH TWO (2) WIRELESS MICROPHONE COMBO KITS FOR THE GYM SOUND SYSTEM. REFER TO SPECIFICATIONS.

8 – FURNISH TWO (2) HAND HELD OR STAND MOUNTED MICROPHONES FOR THE GYM SOUND SYSTEM EACH MICROPHONE SHALL BE FURNISHED WITH ONE (1) TWENTY FIVE (25) FOOT EXTENSION CORDS. REFER TO SPECIFICATIONS.

9 – FURNISH TWO (2) ADJUSTABLE HEIGHT FLOOR STANDS.

10 – THE EQUIPMENT RACK SHALL BE SIZED TO ACCOMMODATE ALL REQUIRED EQUIPMENT/COMPONENTS, AND DRAWER. PROVIDE BLANK PLATES AS REQUIRED.

11 – THE EQUIPMENT RACK SHALL BE SIZED TO ACCOMMODATE ALL REQUIRED EQUIPMENT/COMPONENTS, AND DRAWER. PROVIDE BLANK PLATES AS REQUIRED.

12 – ALL SOUND SYSTEM CABLING SHALL BE SIZED PER THE MANUFACTURER'S REQUIREMENTS FOR AMP AND SPEAKERS INCLUDING VOLTAGE DROP.

13 – ALL WIRING TO BE FURNISHED IN EMT CONDUIT.

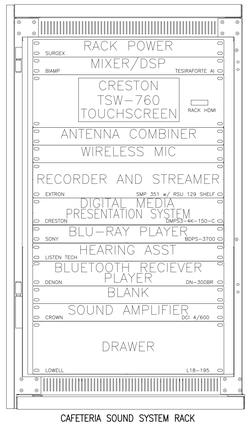

CAFETERIA SOUND SYSTEM RACK

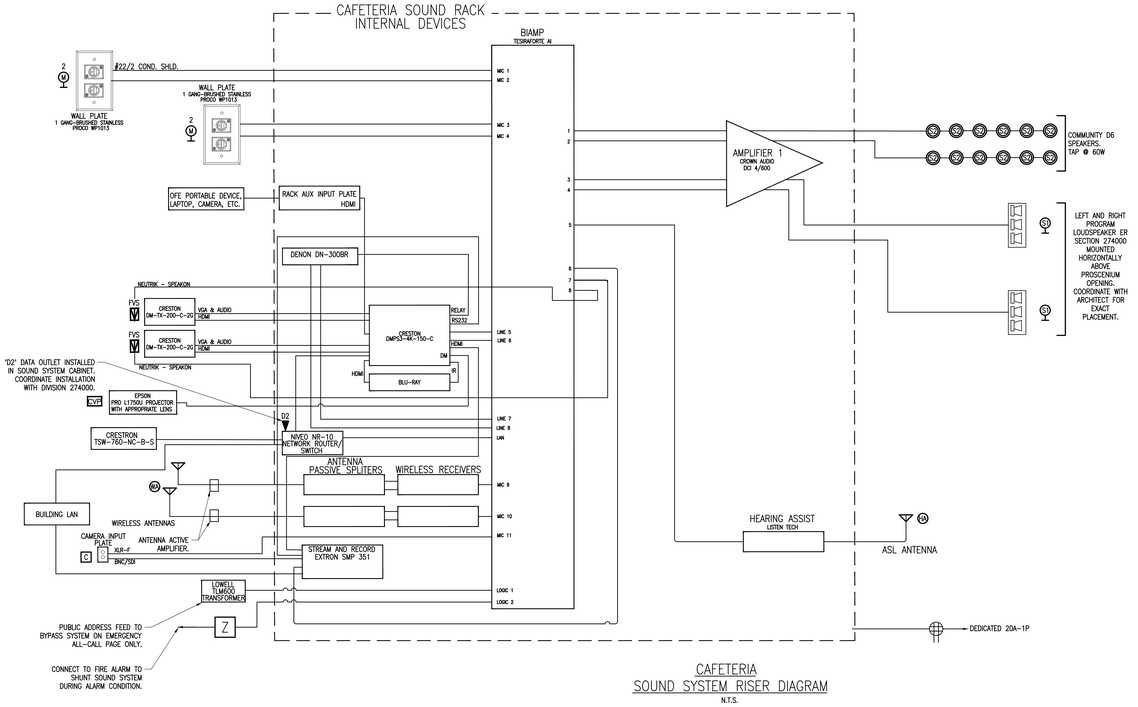

CAFETERIA
SOUND SYSTEM RISER DIAGRAM
N.T.S.

CAFETERIA SOUND SYSTEMS NOTES

1 – THE CD RECORDER, MIXER, EQUALIZER, COMPRESSOR/LIMITER. WIRELESS MICROPHONE RECEIVER, ASSISTIVE LISTENING SYSTEM TRANSMITTER, AND POWER STRIP SHALL BE INSTALLED IN AN EQUIPMENT RACK WITH LOCKING FRONT HINGED DOOR. REFER TO SPECIFICATIONS.

2 – FURNISH AND INSTALL A COMPACT DISC (CD) PLAYER/RECORDER WITH UNIVERSAL RACK MOUNTING KIT. REFER TO SPECIFICATIONS.

3 – FURNISH AND INSTALL WIRELESS MICROPHONE RECEIVERS WITH REMOTE ANTENNA FOR OPTIMAL PERFORMANCE.

4 – FURNISH AND INSTALL AN ASSISTIVE LISTENING SYSTEM TRANSMITTER. REFER TO SPECIFICATIONS.

5 – THE ELECTRICAL SUBCONTRACTOR SHALL FURNISH PORTABLE FM RECEIVERS WITH DUAL EARPHONES. PROVIDE THE REQUIRED ANTENNA CABLE. REFER TO SPECIFICATIONS.

6 – THE WIRELESS MICROPHONE RECEIVER AND THE ASSISTIVE LISTENING SYSTEM TRANSMITTER FOR THE GYMNASIUM SOUND SYSTEMS SHALL BE FURNISHED WITH DIFFERENT OPERATING FREQUENCIES SO THAT EACH SYSTEM CAN OPERATE SIMULTANEOUSLY WITHOUT INTERFERENCE FROM THE CAFETERIA SYSTEM.

7 – FURNISH FOUR (2) WIRELESS MICROPHONE COMBO KITS FOR THE CAFETERIA SOUND SYSTEM. REFER TO SPECIFICATIONS.

8 – FURNISH FOUR (4) HAND HELD OR STAND MOUNTED MICROPHONES FOR THE CAFETERIA SOUND SYSTEM. EACH MICROPHONE SHALL BE FURNISHED WITH ONE (1) TWENTY FIVE (25) FOOT EXTENSION CORDS. REFER TO SPECIFICATIONS.

9 – FURNISH FOUR (2) ADJUSTABLE HEIGHT FLOOR STANDS.

10 – FURNISH TWO (2) DESK STAND. ATLAS DS2 OR APPROVED EQUAL.

11 – COORDINATE SPEAKER LOCATIONS FOR OPTIMUM ACOUSTICAL PERFORMANCE IN THE SPACE INDICATED.

12 – THE EQUIPMENT RACK SHALL BE SIZED TO ACCOMMODATE ALL REQUIRED EQUIPMENT/COMPONENTS, AND DRAWER. PROVIDE BLANK PLATES AS REQUIRED.

13 – ALL SOUND SYSTEM CABLING SHALL BE SIZED PER THE MANUFACTURER'S REQUIREMENTS FOR AMP AND SPEAKERS INCLUDING VOLTAGE DROP.

14 – ALL EXPOSED WIRING AND WIRING CONCEALED IN WALLS TO BE FURNISHED IN EMT CONDUIT.

15 – PROVIDE PRESET SELECTIONS TO CONFIGURE ON-OFF FOR EACH OF THE TWO SPEAKER CLUSTERS.

LOCAL SOUND SYSTEM NOTES:

1 – THE ELECTRICAL SUBCONTRACTOR AND HIS SUB BID AUDIO-VIDEO COMMUNICATIONS SUBCONTRACTOR SHALL FURNISH AND INSTALL A COMPLETE AND FULLY FUNCTIONAL LOCAL SOUND SYSTEM, SHOWN ON THESE DRAWINGS. ALL WIRING TO BE INSTALLED IN CONDUIT. THE ELECTRICAL SUBCONTRACTOR SHALL FURNISH AND INSTALL ALL ELECTRICAL MATERIAL INCLUDING CONDUIT, PULL LINES, OUTLET BOXES, JUNCTION BOXES, INSULATING BUSHINGS, 120-VOLT FEEDERS, ETC.. THE SOUND SYSTEM EQUIPMENT IS SPECIFIED IN DIVISION 274000 SPECIFICATION. THE DIVISION 274000 SUBCONTRACTOR SHALL FURNISH AND INSTALL ALL SOUND SYSTEM EQUIPMENT INCLUDING SOUND SYSTEM WIRING. THE ELECTRICAL SUBCONTRACTOR AND HIS SUB BID SOUND SYSTEM SUBCONTRACTOR SHALL FURNISH ALL LABOR AND MATERIAL REQUIRED FOR A FULLY FUNCTIONAL LOCAL SOUND SYSTEM SHOWN ON THESE ELECTRICAL DRAWINGS.

AMESBURY ELEMENTARY SCHOOL

AMESBURY, MA

DINISCO DESIGN
architects + planners
99 Chauncy Street, Suite 901
Boston, MA 02111
(617) 426-2858

DGT Associates
Surveying & Engineers
1071 Worcester Road
Framingham, MA 01701
(508) 879-0030

Brown Sardina, Inc.
Landscape Architects
24 Roland Street
Boston, MA 02129
(617) 482-4703

Foley Buhl Roberts & Assoc., Inc.
Structural Engineers
2150 Washington Street
Newton, MA 02462
(617) 527-9600

Crabtree McGrath Assoc., Inc.
Food Service Consultants
161 West Main Street
Georgetown, MA 01833
(978) 352-8500

VAV International, Inc.
Mechanical Engineers
400 West Cummings Park S. 4700
Woburn, MA 01801
(781) 935-7228

Thompson Engineering Company, Inc.
Electrical Engineers
89 Newbury Street, Suite 103
Danvers, MA 01923
(617) 866-9066

EdVance Technology Design, Inc.
Technology Consultants
300 Brickstone Square, Suite 201
Andover, MA 01880
(978) 256-9900

KEY PLAN

NORTH ARROW | STAMP

Date: 21 August 2020

Drawn By: JM, TD, EG

Scale: N.T.S.

Revisions

Number	Date	Description

90% COST ESTIMATE SET

Sound System Details Sheet #1

10.3.09

© 2020 DiNisco Design

I:\19011 - Amesbury Elementary School\12-2-19 dwg 19-01003 2-11-20.PM

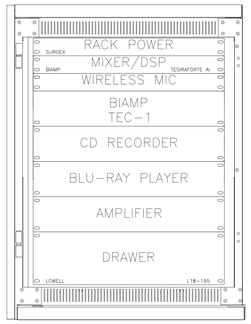

MUSIC CLASSROOM SOUND SYSTEM RACK
LOWELL

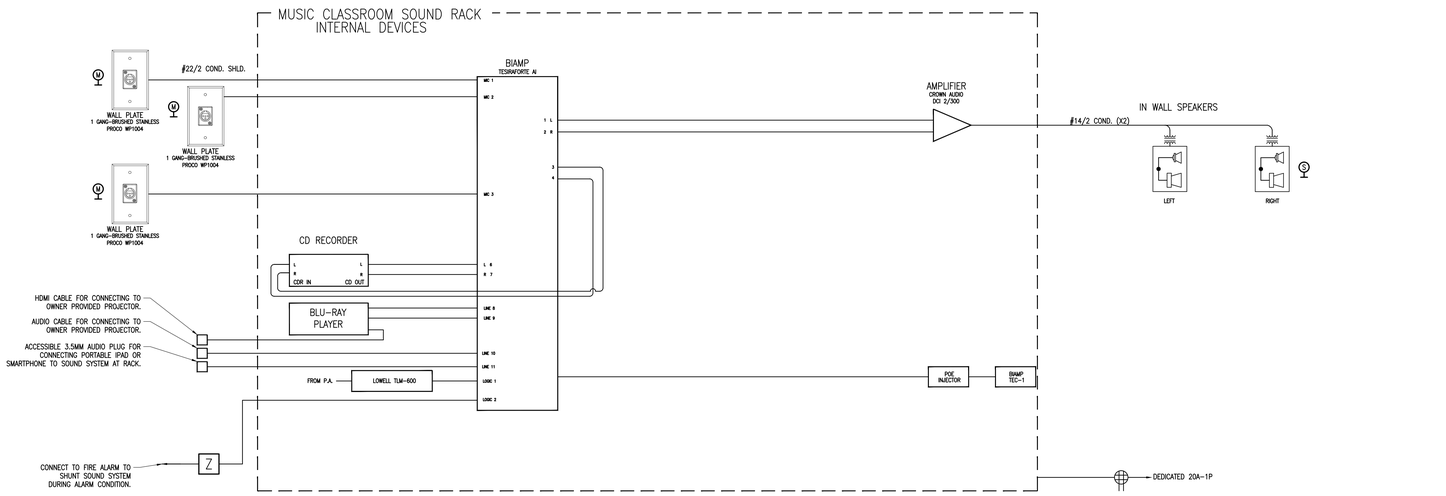

MUSIC CLASSROOM
SOUND SYSTEM RISER DIAGRAM
N.T.S.

LOCAL SOUND SYSTEM NOTES:

1 – THE ELECTRICAL SUBCONTRACTOR AND HIS SUB BID AUDIO-VIDEO COMMUNICATIONS SUBCONTRACTOR SHALL FURNISH AND INSTALL A COMPLETE AND FULLY FUNCTIONAL LOCAL SOUND SYSTEM, SHOWN ON THESE DRAWINGS. ALL WIRING TO BE INSTALLED IN CONDUIT. THE ELECTRICAL SUBCONTRACTOR SHALL FURNISH AND INSTALL ALL ELECTRICAL MATERIAL INCLUDING CONDUIT, PULL LINES, OUTLET BOXES, JUNCTION BOXES, INSULATING BUSHINGS, 120-VOLT FEEDERS, ETC.. THE SOUND SYSTEM EQUIPMENT IS SPECIFIED IN DIVISION 274000 SPECIFICATION. THE DIVISION 274000 SUBCONTRACTOR SHALL FURNISH AND INSTALL ALL SOUND SYSTEM EQUIPMENT INCLUDING SOUND SYSTEM WIRING. THE ELECTRICAL SUBCONTRACTOR AND HIS SUB BID SOUND SYSTEM SUBCONTRACTOR SHALL FURNISH ALL LABOR AND MATERIAL REQUIRED FOR A FULLY FUNCTIONAL LOCAL SOUND SYSTEM SHOWN ON THESE ELECTRICAL DRAWINGS.

MUSIC CLASSROOM SOUND SYSTEM NOTES

1 – ALL EQUIPMENT SHALL BE INSTALLED IN A WALL MOUNTED EQUIPMENT RACK WITH LOCKING FRONT HINGED DOOR, PER DIVISION 274000.

2 – FURNISH AND INSTALL A CD RECORDER PLAYER WITH UNIVERSAL WALL MOUNTING KIT, PER DIVISION 274000.

3 – FURNISH TWO (2) HAND HELD OR STAND MOUNTED MICROPHONES FOR THE MUSIC CLASSROOM SOUND SYSTEM. EACH MICROPHONE SHALL BE FURNISHED WITH ONE (1) TWENTY FIVE (25) FOOT EXTENSION CORDS.

4 – FURNISH TWO (2) ADJUSTABLE HEIGHT FLOOR STANDS.

5 – THE EQUIPMENT RACK SHALL BE SIZED TO ACCOMMODATE ALL REQUIRED EQUIPMENT/COMPONENTS, AND DRAWER. PROVIDE BLANK PLATES AS REQUIRED.

6 – ALL SOUND SYSTEM CABLING SHALL BE SIZED PER THE MANUFACTURER'S REQUIREMENTS FOR AMP AND SPEAKERS INCLUDING VOLTAGE DROP.

7 – ALL WIRING TO BE FURNISHED IN EMT CONDUIT.

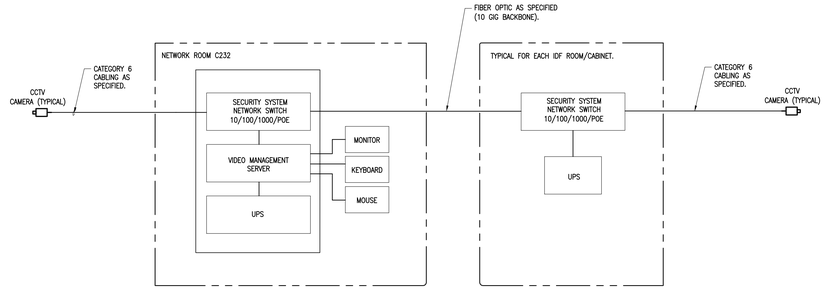

SECURITY CAMERA CCTV
ONE LINE DIAGRAM
N.T.S.

IP SURVEILLANCE CAMERA SYSTEM

1 – COORDINATE EXACT LOCATION OF ALL CAMERAS WITH ARCHITECT PRIOR TO INSTALLATION.

2 – THE ELECTRICAL SUBCONTRACTOR SHALL FURNISH AND INSTALL ALL CONDUIT AND 120V WIRE REQUIRED FOR A FULLY FUNCTIONAL SYSTEM. CONTRACTOR SHALL SIZE ALL WIRING IN ACCORDANCE WITH VOLTAGE DROP REQUIREMENTS.

3 – IN AREAS WITH NO CEILING, ALL WIRING SHALL BE INSTALLED IN EMS CONDUIT.

4 – COORDINATE INSTALLATION WITH ARCHITECT.

5 – THE INTEGRATED SECURITY SYSTEM SUBCONTRACTOR DIV 281000 SHALL PROVIDE THE NECESSARY SUPERVISION DURING THE INSTALLATION OF THE IP CAMERA SYSTEM AND SHALL MAKE FINAL TEST ADJUSTMENTS OF THE COMPLETED SYSTEM AND SHALL ALSO PROVIDE THE SCHOOL PERSONNEL WITH A DEMONSTRATION AND OPERATING INSTRUCTIONS FOR THE ENTIRE SYSTEM.

6 – COORDINATE EXACT LOCATION OF HEAD END EQUIPMENT WITH ARCHITECT PRIOR TO INSTALLATION.

7 – MONITORS AND VIDEO PROCESSORS SHALL BE CAPABLE OF SHOWING IMAGES FROM ALL CAMERAS SIMULTANEOUSLY.

8 – THE ELECTRICAL SUBCONTRACTOR SHALL FURNISH AND INSTALL ALL ELECTRICAL MATERIAL INCLUDING CONDUIT, PULL LINES, OUTLET BOXES, JUNCTION BOXES, INSULATING BUSHINGS, 120-VOLT FEEDERS, ETC.. THE VIDEO SECURITY EQUIPMENT IS SPECIFIED IN 281000 SPECIFICATION. THE 281000 SUBCONTRACTOR SHALL FURNISH AND INSTALL ALL VIDEO SECURITY EQUIPMENT, VIDEO MANAGEMENT SYSTEM, AND LICENSES FOR THE SECURITY CAMERA SYSTEM. THE 281000 SUBCONTRACTOR SHALL FURNISH AND INSTALL CAT 6A CABLING FOR THE IP CAMERAS.

AMESBURY ELEMENTARY SCHOOL

AMESBURY, MA

DINISCO DESIGN
architects + planners
99 Chauncy Street, Suite 901
Boston, MA 02111
(617) 426-2858

DGT Associates
Surveying & Engineers
1071 Worcester Road
Framingham, MA 01701
(508) 879-0030

Brown Sardina, Inc.
Landscape Architects
24 Roland Street
Boston, MA 02129
(617) 482-4703

Foley Buhl Roberts & Assoc., Inc.
Structural Engineers
2150 Washington Street
Newton, MA 02462
(617) 527-9600

Crabtree McGrath Assoc., Inc.
Food Service Consultants
161 West Main Street
Georgetown, MA 01833
(978) 352-8500

VAV International, Inc.
Mechanical Engineers
400 West Cummings Park S. 4700
Woburn, MA 01801
(781) 935-7228

Thompson Engineering Company, Inc.
Electrical Engineers
89 Newbury Street, Suite 103
Danvers, MA 01923
(617) 866-9066

EdVance Technology Design, Inc.
Technology Consultants
300 Brickstone Square, Suite 201
Andover, MA 01880
(978) 256-9900

KEY PLAN

NORTH ARROW | STAMP

Date: 21 August 2020

Drawn By: JM, TD, EG

Scale: N.T.S.

Revisions

Number	Date	Description

90% COST ESTIMATE SET

Sound System Details Sheet #2

10.3.10

© 2020 DiNisco Design

I:\19011 - Amesbury Elementary School\10.3.10.dwg, 8/14/2020 3:01:28 PM

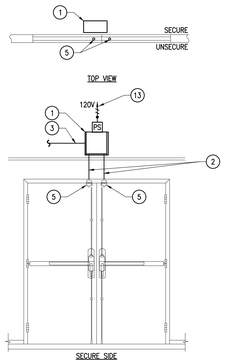

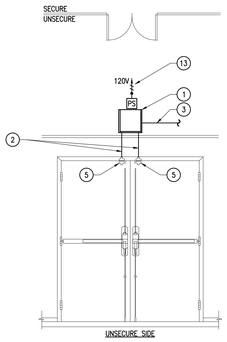

TYPICAL DOUBLE DOOR ELEVATION

N.T.S.

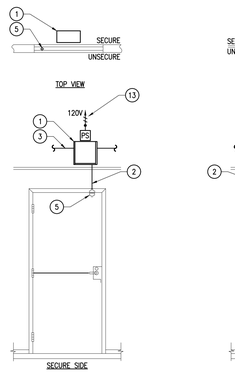

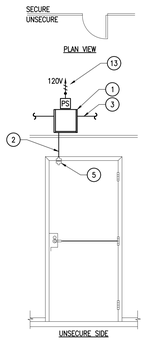

TYPICAL SINGLE DOOR ELEVATION

N.T.S.

EQUIPMENT LIST

1. ENCLOSURE W/ BACK PLANE – SIZE ACCORDINGLY
2. 3/4" EMT CONDUIT WITH REQUIRED SECURITY CABINET
3. 3/4" EMT CONDUIT TO NEAREST ACCESSIBLE CEILING. REQUIRED SECURITY AND WIRING TO SECURITY PANEL.
4. RECESSED TWO GANG BOX WITH SINGLE GANG RING
5. MAGNETIC DOOR CONTACT
6. CARD READER
7. ELECTRONIC TRANSFER HINGE BY DOOR HARDWARE ELECTRIC TRIM, ELECTRIC STRIKE
8. ELECTRIFIED DOOR LOCKING HARDWARE WITH INTEGRAL EXITING DEVICE WITH INTEGRAL REQUEST TO EXIT OPTION.
9. DOOR OPENER CONTROLLER BY DOOR HARDWARE
10. DOOR CONTROLLER PROVIDED BY DOOR HARDWARE CONTRACTOR. INSTALLED AND WIRED BY ELECTRICAL CONTRACTOR.
11. SECONDARY SYSTEM BYPASS FURNISHED AND INSTALLED WIRING TO DOOR BY ELECTRICAL CONTRACTOR.
12. CONDUIT AND WIRING TO DOOR ACTUATOR FURNISH AND INSTALLED BY ELECTRICAL CONTRACTOR.
13. 120V OPTIONAL STANDBY POWER TO DOOR OPERATOR AND SECURITY SYSTEM POWER SUPPLY BY ELECTRICAL CONTRACTOR

NOTES

1 – COORDINATE INSTALLATION AND EQUIPMENT LOCATION WITH ARCHITECT AND DOOR HARDWARE SUBCONTRACTOR.

2 – CARD ACCESS SYSTEM EQUIPMENT, CABLING, LABOR SHALL BE FURNISHED AND INSTALLED BY DIVISION 281000 SECURITY CONTRACTOR.

3 – ELECTRICAL CONTRACTOR TO FURNISH AND INSTALL ALL CONDUITS, BOXES, 120V CIRCUITRY PULL LINES AND INSULATING BUSHINGS AS REQUIRED. ELECTRICAL CONTRACTOR TO FURNISH AND INSTALL A 20A–1P CIRCUIT TO EACH DOOR STRIKE LOCATION POWER SUPPLY.

4 – REFER TO FLOOR PLANS.

5 – REQUIRED DATA CABLING FOR CARD ACCESS SYSTEM BY DIVISION 281000 SECURITY CONTRACTOR.

6 – PROVIDE QUANTITY AND TYPE OF CABLES REQUIRED TO CONNECT ALL COMPONENTS TO ACCESS CONTROL AND INTRUSION DETECTION SYSTEMS.

7 – CONDUITS AND BOXES AS REQUIRED SHALL BE PROVIDED BY DIVISION 260001 ELECTRICAL.

8 – COORDINATE WITH DOOR HARDWARE AND DIVISION 260001 ELECTRICAL.

9 – ALL CONDUIT TO BE RECESSED IN WALL OR WINDOW SYSTEM MULLION.

10 – THE ELECTRICAL CONTRACTOR SHALL FURNISH AND INSTALL A DEDICATED 20/1P, 120V CIRCUIT FROM NEAREAST OPTIONAL STANDBY POWER PANEL TO EACH SECURITY DOOR POWER SUPPLY. POWER SUPPLY FURNISHED AND INSTALLED BY DIVISION 28 SUBCONTRACTOR.

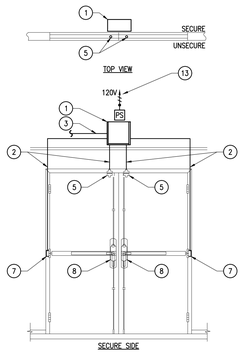

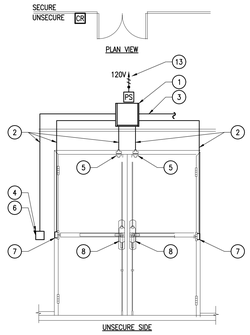

TYPICAL CARD READER DOUBLE DOOR ELEVATION

N.T.S.

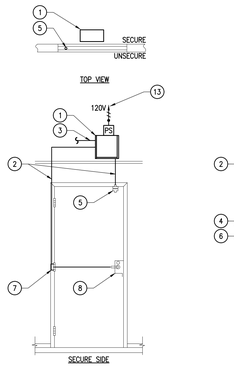

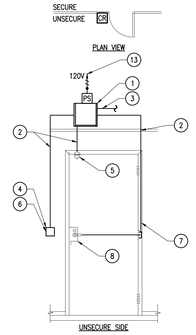

TYPICAL CARD READER SINGLE DOOR ELEVATION

N.T.S.

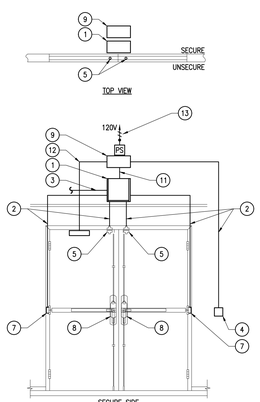

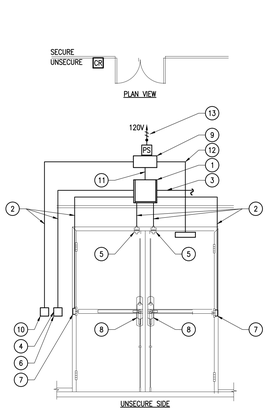

TYPICAL CARD READER WITH DOOR OPERATOR EXTERIOR DOUBLE DOOR ELEVATION

N.T.S.

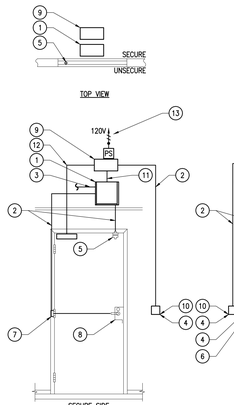

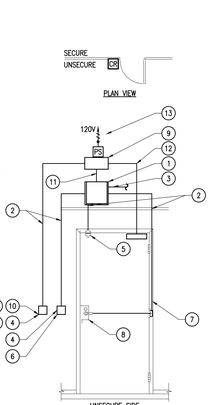

TYPICAL CARD READER WITH DOOR OPERATOR EXTERIOR SINGLE DOOR ELEVATION

N.T.S.

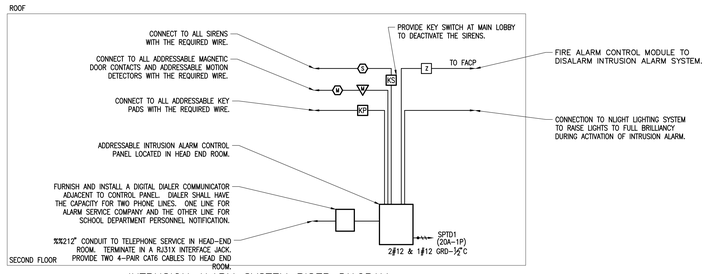

INTRUSION ALARM SYSTEM RISER DIAGRAM

N.T.S.

PARTITION SCHEDULE	
ZONE	DESCRIPTION
1	ENTIRE BUILDING. ALL MAGNETIC DOOR CONTACTS AND MOTION DETECTORS.
2	ALL MAGNETIC DOOR CONTACTS IN BUILDING.
3	FIRE ALARM CONNECTION.
4	ALL DEVICES ON SECOND AND THIRD FLOORS.

INTRUSION ALARM SYSTEM NOTES:

1 – THE DIVISION 281000 SECURITY CONTRACTOR SHALL FURNISH AND INSTALL, WIRE, PROGRAM AND TEST AN INTRUSION ALARM SYSTEM. SYSTEM SHALL CONSIST OF CONTROL PANEL, KEY PADS, ADDRESSABLE DOOR CONTACTS, ADDRESSABLE PIR MOTOR DETECTORS, SIRENS AND WIRING. THE ADDRESSABLE INTRUSION ALARM SYSTEM SHALL BE PER DIVISION 281000 SECURITY SYSTEMS SPECIFICATION. ALL WIRING PER MANUFACTURERS REQUIREMENTS.

2 – THE ADDRESSABLE INTRUSION ALARM SYSTEM SHALL BE PROGRAMMED BY THE SYSTEM MANUFACTURER'S SERVICE DEPARTMENT. THE SYSTEM SHALL BE PROGRAMMED SO THAT CERTAIN SECTIONS OF THE BUILDING MAY BE UTILIZED FOR NIGHT TIME ACTIVITIES AND OTHER SECTIONS MAY BE IN ALARM CONDITION. THE EXACT NUMBER AND LOCATION OF THE VARIOUS DETECTION ZONES SHALL BE DETERMINED BY THE OWNER.

3 – FURNISH AND INSTALL A DIGITAL DIALER COMMUNICATOR IN THE HEAD END ROOM ADJACENT TO THE CONTROL PANEL. DIGITAL DIALER COMMUNICATOR SHALL HAVE THE CAPACITY FOR DIALING TWO (2) PHONE NUMBERS: ONE LINE FOR THE ALARM SERVICE COMPANY AND THE OTHER FOR NOTIFICATION OF SCHOOL DEPARTMENT PERSONNEL.

4 – PARTITION #1 SHALL BE ALL DEVICES IN THE BUILDING SO THAT ANY KEY PAD CAN ALARM/DISALARM THE ENTIRE SYSTEM.

5 – PARTITION #2 SHALL BE ALL MAGNETIC DOOR CONTACTS IN THE ENTIRE BUILDING.

6 – PARTITION #3 SYSTEM TO BE PROGRAMMED TO AUTOMATICALLY DISALARM IN THE EVENT OF A FIRE ALARM SIGNAL. SYSTEM TO AUTOMATICALLY DISALARM TO ALLOW ENTRY OF FIRE DEPARTMENT DURING ALARM CONDITION.

7 – COORDINATE RECESS DOOR CONTACTS WITH ARCHITECT.

8 – ALL WIRING CONCEALED IN WALLS, OR INSTALLED EXPOSED ON STRUCTURAL CEILING, OR EXPOSED ON CMU WALLS SHALL BE INSTALLED IN EMT CONDUIT. PROVIDE OUTLET BOXES AS REQUIRED.

9 – THE ELECTRICAL SUBCONTRACTOR SHALL FURNISH AND INSTALL ALL ELECTRICAL MATERIAL INCLUDING CONDUIT, PULL LINES, OUTLET BOXES, JUNCTION BOXES, INSULATING BUSHINGS, 120–VOLT FEEDERS, ETC. THE ELECTRICAL CONTRACTOR SHALL FURNISH AND INSTALL ALL EQUIPMENT INCLUDING INTRUSION SYSTEM WIRING. THE ELECTRICAL SUBCONTRACTOR SHALL FURNISH ALL LABOR AND MATERIAL REQUIRED FOR A FULLY FUNCTIONAL INTRUSION SYSTEM.

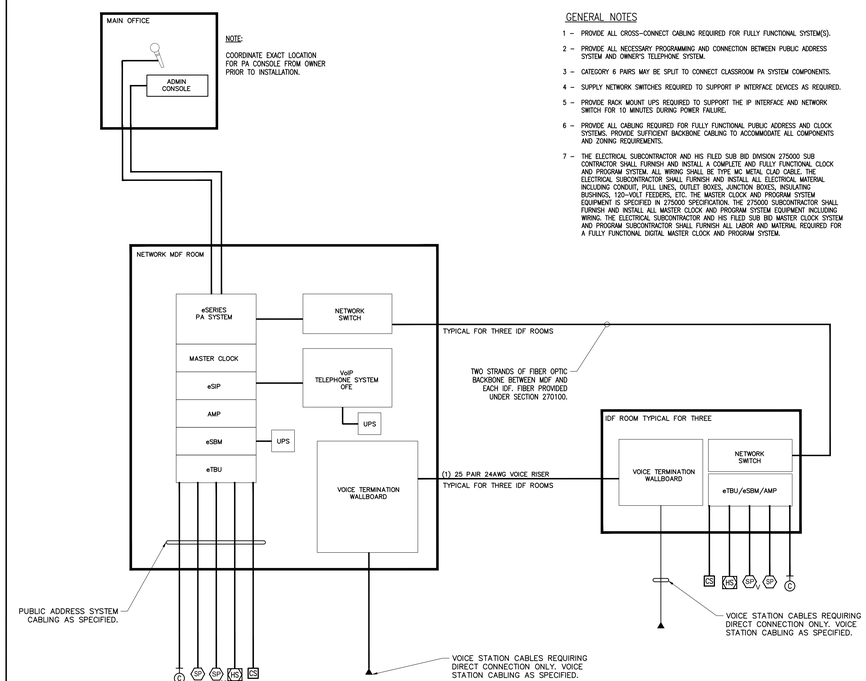

GENERAL NOTES

1 – PROVIDE ALL CROSS–CONNECT CABLING REQUIRED FOR FULLY FUNCTIONAL SYSTEM(S).

2 – PROVIDE ALL NECESSARY PROGRAMMING AND CONNECTION BETWEEN PUBLIC ADDRESS SYSTEM AND OWNER'S TELEPHONE SYSTEM.

3 – CATEGORY 6 PAIRS MAY BE SPLIT TO CONNECT CLASSROOM PA SYSTEM COMPONENTS.

4 – SUPPLY NETWORK SWITCHES REQUIRED TO SUPPORT IP INTERFACE DEVICES AS REQUIRED.

5 – PROVIDE RACK MOUNT UPS REQUIRED TO SUPPORT THE IP INTERFACE AND NETWORK SWITCH FOR 10 MINUTES DURING POWER FAILURE.

6 – PROVIDE ALL CABLING REQUIRED FOR FULLY FUNCTIONAL PUBLIC ADDRESS AND CLOCK SYSTEMS. PROVIDE SUFFICIENT BACKBONE CABLING TO ACCOMMODATE ALL COMPONENTS AND ZONING REQUIREMENTS.

7 – THE ELECTRICAL SUBCONTRACTOR AND HIS FILED SUB BID DIVISION 275000 SUB CONTRACTOR SHALL FURNISH AND INSTALL A COMPLETE AND FULLY FUNCTIONAL CLOCK AND PROGRAM SYSTEM. ALL WIRING SHALL BE TYPE MC METAL CLAD CABLE. THE ELECTRICAL SUBCONTRACTOR SHALL FURNISH AND INSTALL ALL ELECTRICAL MATERIAL INCLUDING CONDUIT, PULL LINES, OUTLET BOXES, JUNCTION BOXES, INSULATING BUSHINGS, 120–VOLT FEEDERS, ETC. THE MASTER CLOCK AND PROGRAM SYSTEM EQUIPMENT IS SPECIFIED IN 275000 SPECIFICATION. THE 275000 SUBCONTRACTOR SHALL FURNISH AND INSTALL ALL MASTER CLOCK AND PROGRAM SYSTEM EQUIPMENT INCLUDING WIRING. THE ELECTRICAL SUBCONTRACTOR AND HIS FILED SUB BID MASTER CLOCK SYSTEM AND PROGRAM SUBCONTRACTOR SHALL FURNISH ALL LABOR AND MATERIAL REQUIRED FOR A FULLY FUNCTIONAL DIGITAL MASTER CLOCK AND PROGRAM SYSTEM.

PUBLIC ADDRESS/INTERCOM AND CLOCK SYSTEM WIRING DIAGRAM

N.T.S

AMESBURY ELEMENTARY SCHOOL

AMESBURY, MA

DINISCO DESIGN architects + planners

99 Chauncy Street, Suite 901
Boston, MA 02111
(617) 426-2858

DGT Associates
Surveying & Engineers
1071 Worcester Road
Framingham, MA 01701
(508) 879-0030

Brown Sardina, Inc.
Landscape Architects
24 Roland Street
Boston, MA 02129
(617) 482-4703

Foley Buhl Roberts & Assoc., Inc.
Structural Engineers
2150 Washington Street
Newton, MA 02462
(617) 527-9600

Crabtree McGrath Assoc., Inc.
Food Service Consultants
161 West Main Street
Georgetown, MA 01833
(978) 352-8500

VAV International, Inc.
Mechanical Engineers
400 West Cummings Park S. 4700
Woburn, MA 01801
(781) 935-7228

Thompson Engineering Company, Inc.
Electrical Engineers
89 Newbury Street, Suite 103
Danvers, MA 01923
(617) 866-9066

EdVance Technology Design, Inc.
Technology Consultants
300 Brickstone Square, Suite 201
Andover, MA 01880
(978) 256-9900

KEY PLAN

NORTH ARROW STAMP

Date: 21 August 2020

Drawn By: JM, TD, EG

Scale: N.T.S.

Revisions

Number	Date	Description

90% COST ESTIMATE SET

Security System Details

10.3.11

© 2020 DiNisco Design

I:\19017 - Amesbury Elementary School\10.3.11.dwg, 8/14/2020 2:01:20 PM

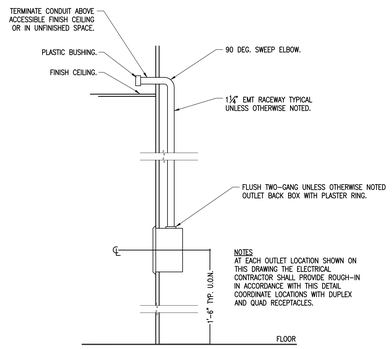

TYPICAL CONDUIT DETAIL
N.T.S.

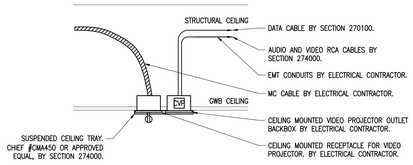

CEILING MOUNTED VIDEO PROJECTOR LOCATION IN PLATFORM SUSPENDED CEILING
N.T.S.

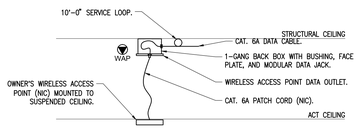

WAP DATA OUTLET AND WIRELESS ACCESS POINT
N.T.S.
TYPICAL FOR ALL LOCATIONS

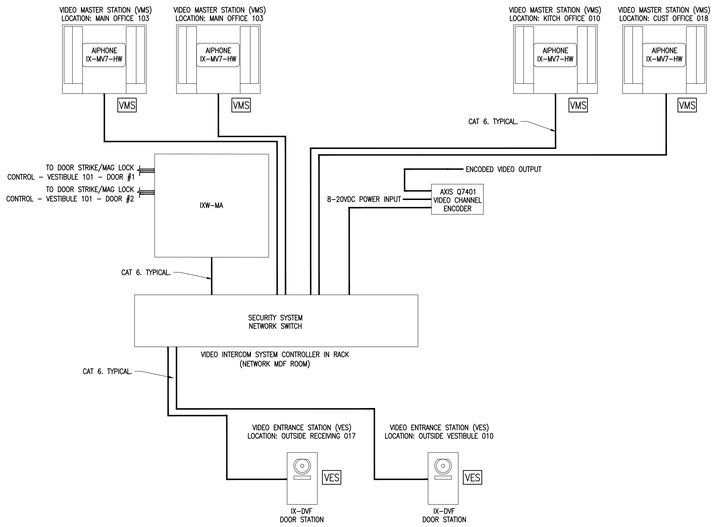

DOOR AUDIO/VIDEO INTERCOM SYSTEM - RISER DIAGRAM
N.T.S.

NOTES

1 - COORDINATE EXACT LOCATION OF ALL VMS AND VES STATIONS WITH ARCHITECT PRIOR TO INSTALLATION.

2 - COORDINATE DOOR STRIKE/MAG LOCK LOCATIONS WITH ARCHITECT AND DOOR HARDWARE CONTRACTOR.

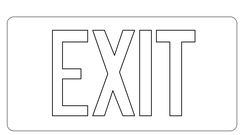

TYPICAL EXIT SIGN
N.T.S.



TYPICAL EXIT SIGN AT ADA ACCESSIBLE ROUTE
N.T.S.

NOTES

1 - EXIT SIGNS BASED ON EELP SWXECT SERIES WITH CUSTOM WORDING TO ESTABLISH STANDARD OF QUALITY.

2 - ISA EXIT SIGNS AT ADA ACCESSIBLE EXIT ROUTES SHALL BE PROVIDED WITH ORIGINAL INTERNATIONAL SYMBOL OF ACCESSIBILITY (NOT CT APPROVED SYMBOL) WHEELCHAIR PICTOGRAM. REFER TO ARCHITECTURAL DRAWING FOR ADA ACCESSIBLE ROUTES.

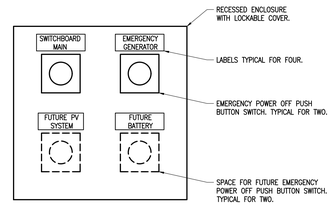

EPO CABINET DETAIL
N.T.S.

EPO CABINET NOTES

1 - ELECTRICAL CONTRACTOR TO FURNISH AND INSTALL A 12"x12"x6"D RECESSED NEMA 1 14-GAUGE STEEL ENCLOSURE WITH HINGED LOCKABLE DOOR. HAMMOND #CHKO-12126 SERIES WITH HINGED LOCKABLE DOOR AND N1JLK LOCK OR APPROVED EQUAL.

2 - ELECTRICAL CONTRACTOR TO FURNISH AND INSTALL TWO EMERGENCY POWER OFF (EPO) STATIONS INSIDE OF ENCLOSURE. EPO STATION TO BE SCHNEIDER ELECTRIC INC 24V EPO XALK SERIES OR APPROVED EQUAL. COORDINATE MOMENTARY OR MAINTAINED CONTACT WITH GENERATOR AND SWITCHBOARD MANUFACTURERS.

3 - PROVIDE FOUR SELF ADHESIVE LABELS AS SHOWN ON DETAIL, ½" WIDE LABELS. PROVIDE LABEL ON ENCLOSURE COVER: "EPO FOR NORMAL AND EMERGENCY POWER."

4 - ENCLOSURE TO BE SIZED TO INCLUDE FOR FUTURE PV SYSTEM AND BATTERY SYSTEM EPO STATIONS.

5 - COORDINATE WITH ARCHITECT.

6 - ELECTRICAL CONTRACTOR TO FURNISH AND INSTALL TWO 1" CONDUITS WITH PULL LINES FROM EPO CABINETS TO THE PV EQUIPMENT LOCATION IN THE MAIN ELECTRIC ROOM.

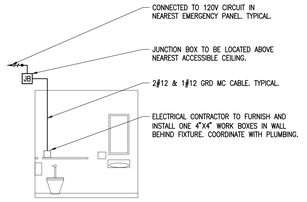

AUTOMATIC TOILET FLUSH TRANSFORMER WIRING DIAGRAM
N.T.S.
TYPICAL FOR SINGLE TOILETS

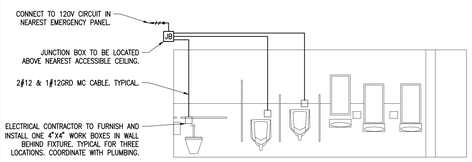

AUTOMATIC TOILET FLUSH TRANSFORMER WIRING DIAGRAM
N.T.S.
TYPICAL FOR BOYS' TOILETS

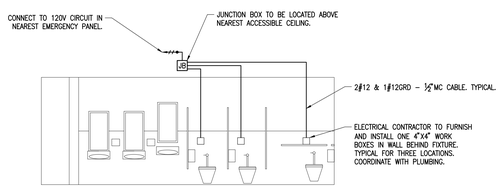

AUTOMATIC TOILET FLUSH TRANSFORMER WIRING DIAGRAM
N.T.S.
TYPICAL FOR GIRLS' TOILETS

NOTES

1 - AT WATER CLOSETS AND URINALS, ELECTRICAL CONTRACTOR TO FURNISH AND INSTALL ONE 4"x4" WORK BOXES IN WALL BEHIND FIXTURE AND CONDUIT TO CEILING ABOVE. ELECTRICAL CONTRACTOR TO PROVIDE 120V POWER TO OUTLET BOX. TRANSFORMER TO BE FURNISH BY PLUMBING CONTRACTOR, INSTALLED AND WIRED BY ELECTRICAL CONTRACTOR. PLUMBING CONTRACTOR TO INSTALL ALL 24V WIRING AND MAKE ALL FINAL CONNECTIONS AT TRANSFORMER IN WORK BOXES IN WALL.

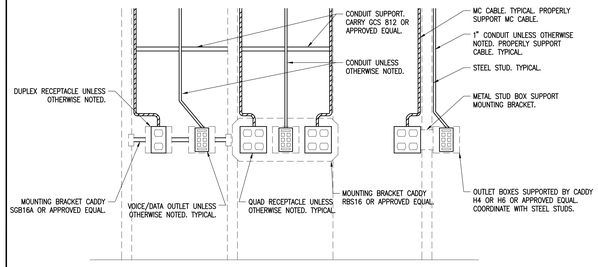

TYPICAL MOUNTING DETAIL FOR VOICE/DATA & RECEPTACLES
N.T.S.

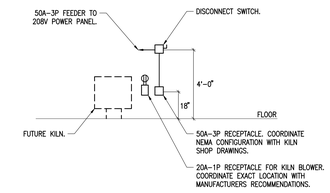

KILN ELEVATION DETAIL
N.T.S.

NOTES

1 - COORDINATE ROOM CONFIGURATION AND EXACT LOCATIONS WITH ARCHITECT.

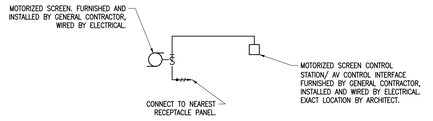

TYPICAL MOTORIZED PROJECTION SCREEN WIRING DIAGRAM
N.T.S.

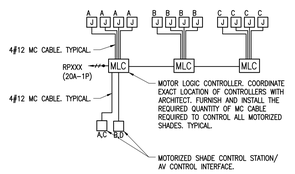

TYPICAL MOTORIZED SUN SHADES WIRING DIAGRAM FOR CAFETERIA AND LIBRARY
N.T.S.

MOTORIZED SHADES NOTES

1 - MOTORIZED SHADE EQUIPMENT IS FURNISHED AND INSTALLED BY MOTORIZED SHADE CONTRACTOR. WIRED BY ELECTRICAL CONTRACTOR.

2 - MOTORIZED SHADE CONTROL STATIONS FURNISHED BY MOTORIZED SHADE CONTRACTOR. INSTALLED AND WIRED BY ELECTRICAL CONTRACTOR.

3 - COORDINATE EXACT LOCATION OF ALL MOTOR LOGIC CONTROLLERS AND MOTORIZED SHADE JUNCTION BOXES WITH THE ARCHITECT.

4 - REFER TO MANUFACTURER'S INSTRUCTION FOR WIRING DIAGRAMS.

5 - ELECTRICAL CONTRACTOR TO FURNISH AND INSTALL ALL REQUIRED WIRE, MC CABLE, OUTLET BOXES, ETC FOR A COMPLETE AND FULLY FUNCTIONAL SYSTEM.

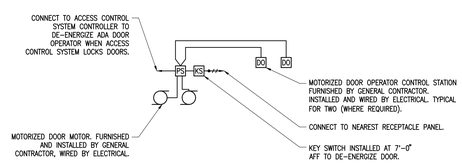

POWER ASSISTED ADA DOOR OPERATOR SYSTEM DIAGRAM
N.T.S.

NOTES

1 - ELECTRICAL CONTRACTOR SHALL FURNISH AND INSTALL ALL REQUIRED ELECTRICAL EQUIPMENT, CONDUIT AND WIRE INCLUDING WIRING TO LIMIT SWITCHES.

2 - COORDINATE WITH ACCESS CONTROL SYSTEM AND DOOR HARDWARE.

AMESBURY ELEMENTARY SCHOOL

AMESBURY, MA

DINISCO DESIGN
architects + planners
99 Chauncy Street, Suite 901
Boston, MA 02111
(617) 426-2858

DGT Associates
Surveying & Engineers
1071 Worcester Road
Framingham, MA 01701
(508) 879-0030

Brown Sardina, Inc.
Landscape Architects
24 Roland Street
Boston, MA 02129
(617) 482-4703

Foley Buhl Roberts & Assoc., Inc.
Structural Engineers
2150 Washington Street
Newton, MA 02462
(617) 527-9600

Crabtree McGrath Assoc., Inc.
Food Service Consultants
161 West Main Street
Georgetown, MA 01833
(978) 352-8500

VAV International, Inc.
Mechanical Engineers
400 West Cummings Park S. 4700
Woburn, MA 01801
(781) 935-7228

Thompson Engineering Company, Inc.
Electrical Engineers
89 Newbury Street, Suite 103
Danvers, MA 01923
(617) 866-9066

EdVance Technology Design, Inc.
Technology Consultants
300 Brickstone Square, Suite 201
Andover, MA 01880
(978) 256-9900

KEY PLAN

NORTH ARROW | STAMP

Date: 21 August 2020

Drawn By: JM, TD, EG

Scale: N.T.S.

Revisions

Number	Date	Description

90% COST ESTIMATE SET

Details Sheet

10.3.12

© 2020 DiNisco Design

I:\18017 - Amesbury Elementary School\10.3.12.dwg, 8/14/2020 2:07:38 PM

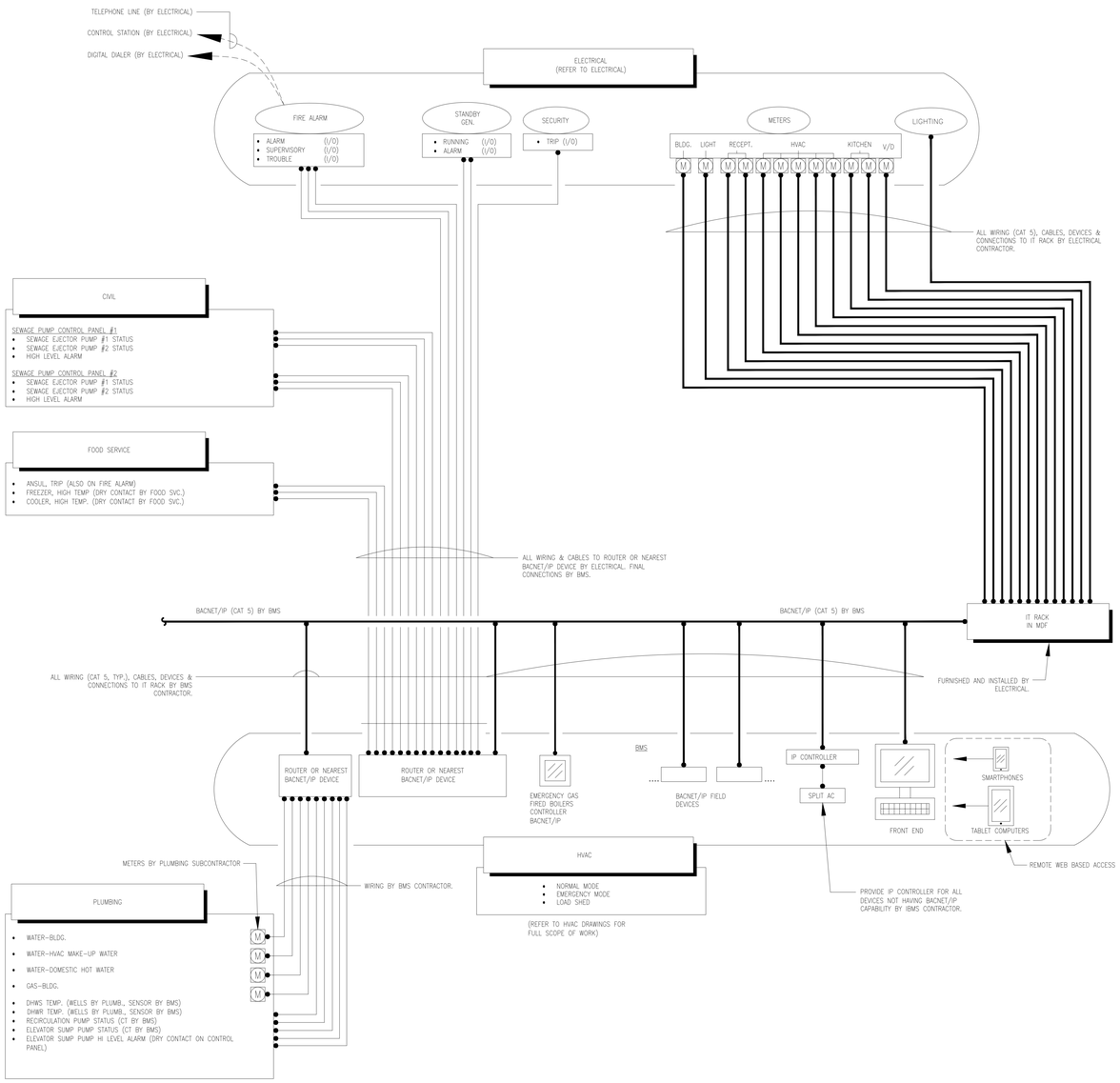

INTEGRATED BUILDING MANAGEMENT SYSTEM (IBMS) ARCHITECTURE

(ALL WORK BY BMS/IBMS UNLESS INDICATED OTHERWISE)

PROGRAMMING NOTES

1 – CLASSROOM AND OFFICE SENSORS SHALL BE VACANCY SENSORS. LIGHTS SHALL TURN ON MANUALLY BY WALL SWITCH AND SHUT OFF AUTOMATICALLY UPON DETECTION OF ABSENCE OF MOVEMENTS FOR 15 MINUTES (ADJ.).

2 – HALLWAY, STAIRS AND RESTROOM SENSORS SHALL BE OCCUPANCY SENSORS. LIGHTS SHALL TURN ON AUTOMATICALLY UPON DETECTION OF MOTION AND TURN OFF AUTOMATICALLY UP DETECTION OF ABSENCE OF MOVEMENTS FOR 30 MINUTES (ADJ.).

3 – WHEN OVERRIDDEN OFF FROM BMS, LIGHTS SHALL BE OFF AND REMAIN OFF REGARDLESS OF WALL SWITCH, MOTION DETECTION, OR SCHEDULE. EXCEPTION: HALLWAY AND STAIR LIGHTS SHALL ALWAYS TURN ON UPON DETECTION OF MOTION.

4 – WHEN OVERRIDDEN ON FROM BMS, LIGHTS SHALL TURN ON AND REMAIN ON REGARDLESS OF WALL SWITCH, MOTION DETECTION, OR SCHEDULE.

5 – DEMAND LOAD SHEDDING SCHEDULE SHALL HAVE A HIGHER PRIORITY THAN OPERATION SCHEDULE SUCH THAT WHEN DEMAND LOAD SHEDDING SCHEDULE IS ACTIVE, ALL DIMMABLE LIGHTS SHALL BE COMMANDED TO A BMS ADJUSTABLE DIMMER LEVEL (%) REGARDLESS OF WALL SWITCH ADJUSTMENT. IN THE ABSENCE OF MOTION DETECTION OR WHEN NORMAL SCHEDULE COMMANDS LIGHTS TO BE OFF, LIGHTS SHALL GO OFF WHILE IN DEMAND LOAD SHED MODE.

6 – OVERRIDE SHALL HAVE HIGHER PRIORITY THAN DEMAND LOAD SHED.

7 – WHEN BUILDING FIRE ALARM IS ACTIVATED, ALL LIGHTS SHALL TURN ON. ONCE FACP IS RESET, ALL LIGHTS SHALL BE OFF FOLLOWING 10 MINUTES TIME DELAY. IN THE EVENT THAT BUILDING FIRE ALARM IS ACTIVATED DURING LIGHTING OCCUPIED HOURS, LIGHTS SHALL REMAIN ON AFTER FACP IS RESET.

BUILDING MANAGEMENT SYSTEM (BMS) NOTES

1 – THE ELECTRICAL CONTRACTOR SHALL PROVIDE ALL REQUIRED MATERIALS AND LABOR FOR INSTALLATION, PROGRAMMING, TESTING AND OWNER TRAINING FOR ALL ELECTRICAL SYSTEMS SPECIFIED ON THESE DRAWINGS AND SPECIFICATIONS FOR EACH SYSTEM TO BE COMPLETE AND FULLY FUNCTIONAL. THE ELECTRICAL CONTRACTOR SHALL PROVIDE ALL REQUIRED MATERIALS AND LABOR FOR INSTALLATION, PROGRAMMING, TESTING AND TRAINING FOR THE ELECTRICAL SYSTEMS THAT SHALL BE CONNECTED TO THE BUILDING MANAGEMENT SYSTEM (BMS). THE ELECTRICAL CONTRACTOR SHALL ALSO INCLUDE IN HIS BID ALL REQUIRED LABOR TO INSTALL, COORDINATE, PROGRAM AND TEST THE ELECTRICAL SYSTEM OUTPUTS TO THE BMS WITH THE BMS SUBCONTRACTOR.

2 – THE ELECTRICAL CONTRACTOR SHALL FURNISH AND INSTALL ALL REQUIRED CONDUIT AND WIRING BETWEEN ALL ELECTRICAL SYSTEMS AND THE BUILDING MANAGEMENT SYSTEM. FINAL CONNECTIONS AT THE BMS EQUIPMENT SHALL BE PERFORMED BY THE BMS CONTRACTOR. REFER TO BMS SPECIFICATION SECTION.

3 – THE INTENT OF THE BMS IS TO PROVIDE THE OWNER WITH ONE CENTRAL MONITORING LOCATION FOR ELECTRICAL, HVAC AND PLUMBING CONTROLS, AND DATA TREND COLLECTION.

4 – FIRE ALARM SYSTEM

THE FIRE ALARM SYSTEM SHALL TRANSMIT THE FOLLOWING SIGNALS – ALARM, SUPERVISORY AND TROUBLE TO THE BMS VIA THREE SETS OF DRY CONTACTS.

THE ELECTRICAL CONTRACTOR SHALL PROVIDE ALL REQUIRED MONITOR MODULES, CONDUIT AND WIRE REQUIRED.

5 – EMERGENCY GENERATOR

THE GENERATOR SHALL TRANSMIT THE FOLLOWING ALARMS GENERATOR RUNNING AND SYSTEM TROUBLE TO THE BMS. THE ELECTRICAL CONTRACTOR SHALL PROVIDE THE REQUIRED CONDUIT AND WIRING FROM THE GENERATOR CONTROL PANEL FOR THE BMS TO MONITOR GENERATOR RUNNING AND THE GENERAL MAIN SYSTEM TROUBLE ALARM FOR ALL TROUBLE SIGNALS.

6 – ELECTRIC METERS

ALL ELECTRIC METERS SHALL TRANSMIT KWH, KW DEMANDS, VOLTAGE AND AMPS TO THE BMS. DATA SHALL BE SENT AND RECORDED EVERY 15 MINUTES. METERS SHALL TRANSMIT THIS DATA USING BACNET IP PROTOCOL.THE ELECTRICAL CONTRACTOR AND SHALL PROVIDE THE REQUIRED CONDUIT AND WIRING FROM THE METERS FOR THE BMS TO MONITOR AND DEMAND DATA TRENDS.

7 – SECURITY SYSTEM

THE INTRUSION ALARM SYSTEM SHALL TRANSMIT THE FOLLOWING SIGNALS – ALARM, ARMED AND DISARMED TO THE IBMS VIA THREE SETS OF DRY CONTACTS. CARD ACCESS– 3SETS OF DRY CONTACTS ARE PROVIDED. SINGLE OR GROUP POINT ASSIGNING TO EACH CONTACT WILL BE DETERMINED BY OWNER. SECURITY ALARM CONDITION WILL TURN ON SELECTED OUTDOOR AND INDOOR LIGHTS, TO BE FINALIZED BY THE TOWN.

THE ELECTRICAL CONTRACTOR AND HIS SECURITY SUBCONTRACTOR SHALL PROVIDE THE REQUIRED CONDUIT AND WIRING FROM THE INTRUSION ALARM CONTROL PANEL FOR THE IBMS TO MONITOR THREE ALARM POINT. CONDUIT AND WIRING TO BE TERMINATED AT THE IBMS PANEL LOCATED IN THE MECHANICAL ROOM.

8 – LIGHTING CONTROL SYSTEM

THE LIGHTING CONTROL SYSTEM SHALL BE INTEGRATED INTO THE BMS.THE LIGHTING CONTROL SYSTEM SHALL TRANSMIT THIS DATA USING BACNET IP PROTOCOL.THE ELECTRICAL CONTRACTOR AND SHALL PROVIDE THE REQUIRED CONDUIT AND WIRING FROM THE LIGHTING CONTROL SYSTEM TO THE BMS.

ENTIRE CAPABILITY OF THE LIGHTING CONTROL SYSTEM, INCLUDING BUT NOT LIMITED TO LIGHTING ZONE CONTROLS, SPACE LIGHTING CONTROLS, SCHEDULING, READ/WRITE, ALARM, TREND LOGGING, ENERGY DEMAND RESPONSE AUTOMATIC

LIGHTING REDUCTION, INTERACTIVE GRAPHIC FLOOR PLAN INTERFACE, ENERGY USAGE MONITORING SHALL BE INTEGRATED INTO THE HVAC BUILDING MANAGEMENT SYSTEM.

THE SYSTEM SHALL PROVIDE THE OWNER WITH A SIMPLIFIED INTERACTIVE GRAPHIC FLOOR PLAN CONTROL INTERFACE FOR THEIR DAY TO DAY USAGE.

WHEN THE SECURITY INTRUSION ALARM SYSTEM IS ACTIVATED SYSTEM, SELECTED INDOOR AND OUTDOOR LIGHTING FIXTURES WILL BE ENERGIZED FOR AUTHORIZED PERSONNEL RESPONSE.

DEMAND RESPONSE ENERGY REDUCTION TO BE PROGRAMMED BY BMS CONTRACTOR PER TOWN REQUIREMENTS. TOWN WILL DEFINE PRIORITY LOAD SHEDDING GROUPS, AND AS THE DEMAND REACHES THE SET POINT KW, LOAD SHEDDING WILL OCCUR BASED ON THE PRIORITY.IT IS ENVISIONED THAT THE LOAD SHEDDING WILL INVOLVE LIGHTING BY ZONES AND HVAC SYSTEMS.

THE LIGHTING CONTROL SYSTEM SHALL COMMUNICATE VIA OPEN PROTOCOL BACNET IP OVER CAT #6 CABLE, TO THE BMS SERVER.

9 – FOOD SERVICE

THE ANSUL STATION SHALL TRANSMIT THE FOLLOWING SIGNALS – ALARM TRIP.

THE FREEZER/COOLER SHALL TRANSMIT THE FOLLOWING SIGNALS – FREEZER HIGH TEMP, COOLER HIGH TEMP. VIA TWO SETS OF DRY CONTACTS.

THE ELECTRICAL CONTRACTOR SHALL PROVIDE ALL REQUIRED CONDUIT AND WIRE REQUIRED FROM THE KITCHEN. CONDUIT AND WIRING TO BE TERMINATED AT THE BMS PANEL LOCATED IN THE MECHANICAL ROOM.

AMESBURY ELEMENTARY SCHOOL

AMESBURY, MA

DINISCO DESIGN
architects + planners
99 Chauncy Street, Suite 901
Boston, MA 02111
(617) 426-2858

DGT Associates
Surveying & Engineers
1071 Worcester Road
Framingham, MA 01701
(508) 879-0030

Brown Sardina, Inc.
Landscape Architects
24 Roland Street
Boston, MA 02129
(617) 482-4703

Foley Buhl Roberts & Assoc., Inc.
Structural Engineers
2150 Washington Street
Newton, MA 02462
(617) 527-9600

Crabtree McGrath Assoc., Inc.
Food Service Consultants
161 West Main Street
Georgetown, MA 01833
(978) 352-8500

VAV International, Inc.
Mechanical Engineers
400 West Cummings Park S. 4700
Woburn, MA 01801
(781) 935-7228

Thompson Engineering Company, Inc.
Electrical Engineers
89 Newbury Street, Suite 103
Danvers, MA 01923
(617) 866-9066

EdVance Technology Design, Inc.
Technology Consultants
300 Brickstone Square, Suite 201
Andover, MA 01880
(978) 256-9900

KEY PLAN

NORTH ARROW | STAMP

Date: 21 August 2020

Drawn By: JM, TD, EG

Scale: N.T.S.

Revisions

Number	Date	Description

90% COST ESTIMATE SET

IBMS System Details

10.3.13

© 2020 DiNisco Design

I:\18011 - Amesbury Elementary School\13 3 Aug 04\A2020 2:17:42 PM