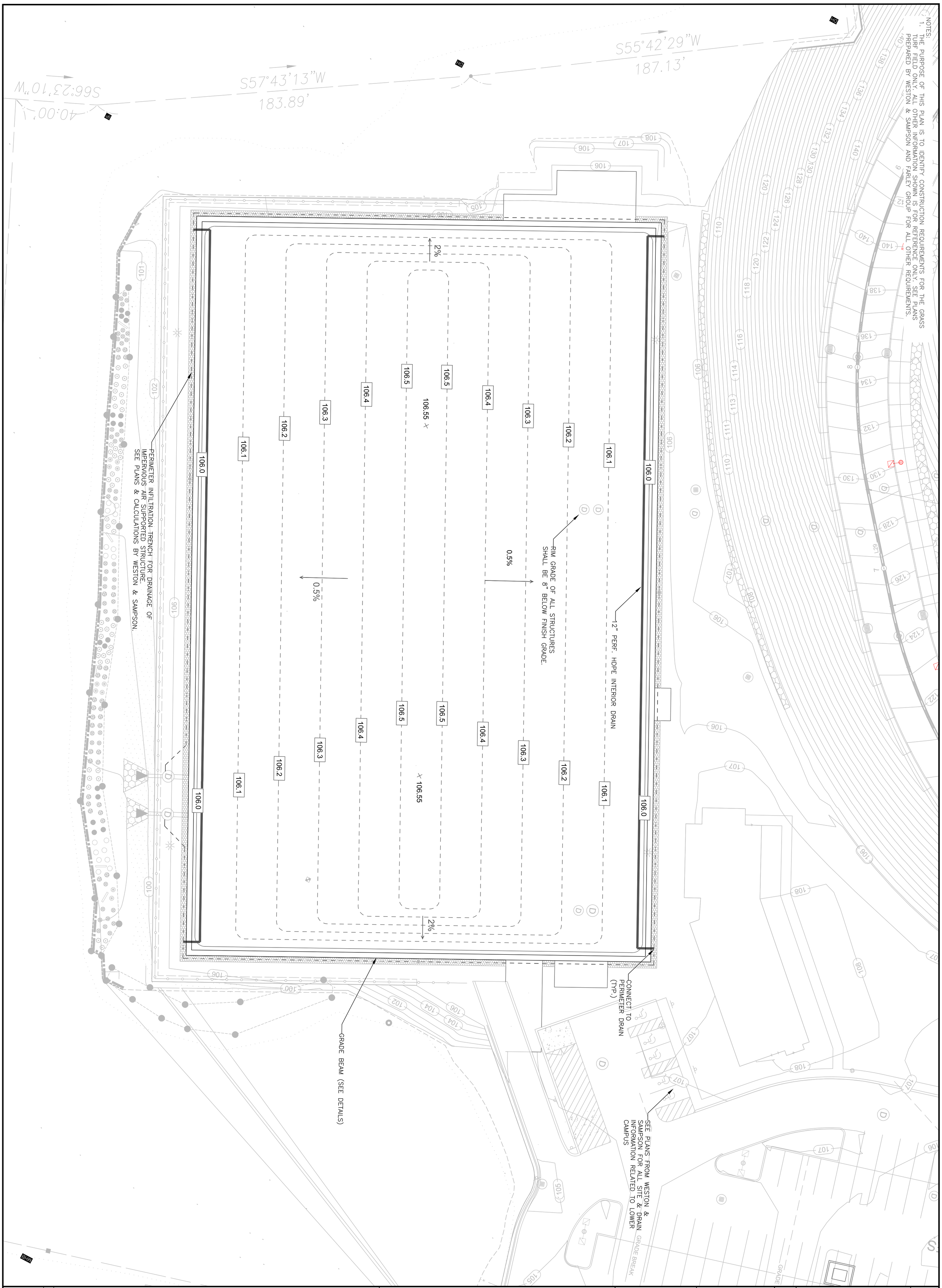

JOB NO.:	**LOWER CAMPUS FIELD** AMESBURY, MA	GLOBAL PROPERTY DEVELOPERS CORPORATION	APPROVED BY:
SHEET NO.: 1 of 2	PREPARED FOR: AMESBURY SPORTS VENTURES, LLC.	80 FIRST STREET, BRIDGEWATER, MA 02324 TEL: (508) 697-9300 FAX: (508) 697-9206	COMMONWEALTH OF MASSACHUSETTS ROBERT M. SANDA CIVIL No. 41767 REGISTERED PROFESSIONAL ENGINEER

DATE: NOVEMBER 1, 2021	
SCALE: 1" = 20'	
DESIGNED BY: RMS	
DRAWN BY: CRE	
CHECKED BY: RMS	REVISIONS

11/01/2021

NOTES:
1. CONTRACTOR SHALL PERFORM CUT AND FILL OPERATIONS AS REQUIRED TO ESTABLISH SUBGRADE ELEVATIONS IN ORDER TO COMPLETE THE PROPOSED IMPROVEMENTS (TYP.)
2. BASE STONE SHALL BE ¾" MINUS WASHED STONE BY BROX INDUSTRIES.
3. TOP STONE SHALL BE STONE & SAND, ⅜" BLEND BY BROX INDUSTRIES.
4. TOP STONE SHALL BE LASER GRADED TWO TIMES AND ROLLED WITH DOUBLE DRUM ROLLER IN BOTH DIRECTIONS TO MEET FINISH GRADES AS SHOWN ON PLANS

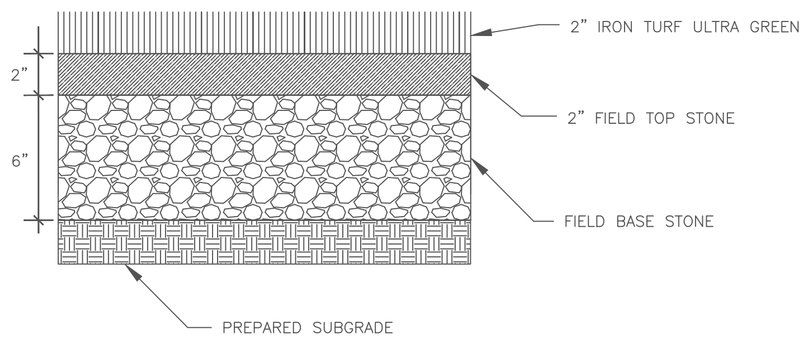

1. SYNTHETIC GRASS TURF FIELD SURFACING
N.T.S.

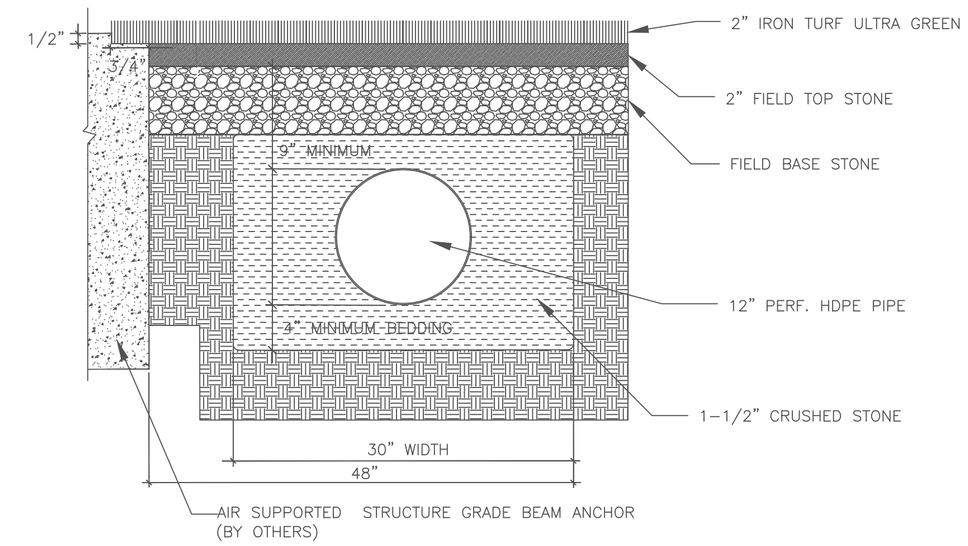

2. INTERIOR COLLECTOR DRAIN
N.T.S.

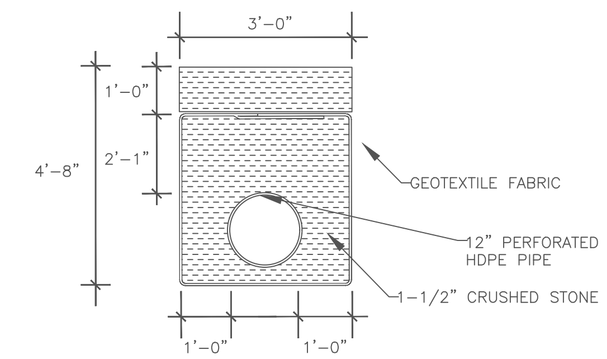

3. PERIMETER INFILTRATION TRENCH DETAIL
N.T.S.

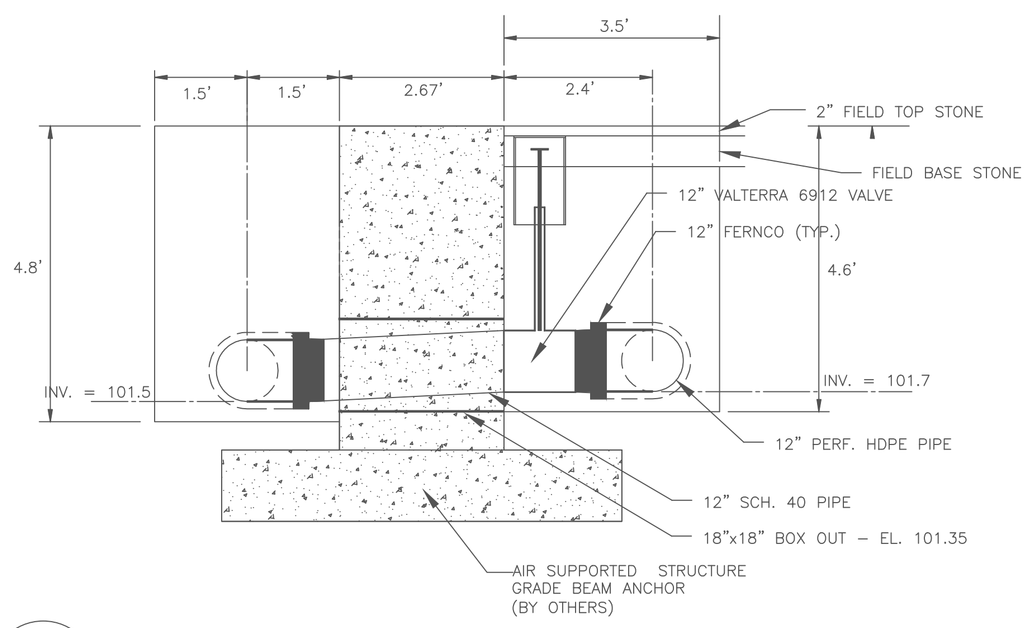

4. CONNECTION TO PERIMETER INFILTRATION PIPE
N.T.S.

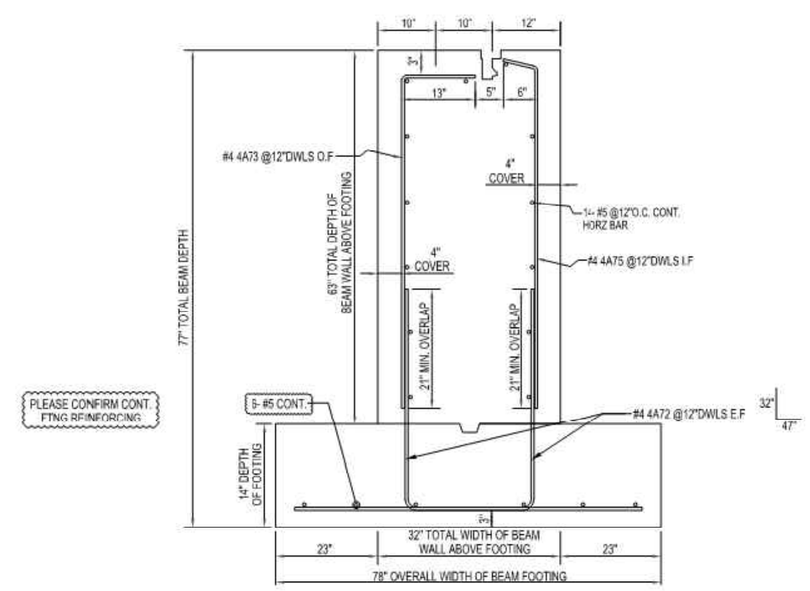

5. GRADE BEAM SECTION TYPICAL
N.T.S.

GRADE BEAM DETAIL DESIGNED BY SERVINSKY ENGINEERING, 280 DOUGLAS AVE, HOLLAND, MI 49424, MARK SERVISNKY, MA PE LICENSE # 47900

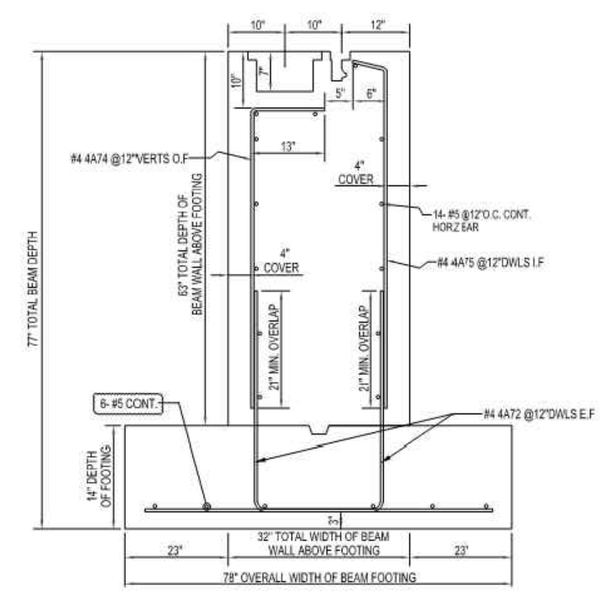

6. GRADE BEAM SECTION TYPICAL AT CABLES
N.T.S.

GRADE BEAM DETAIL DESIGNED BY SERVINSKY ENGINEERING, 280 DOUGLAS AVE, HOLLAND, MI 49424, MARK SERVISNKY, MA PE LICENSE # 47900

REVISIONS

DATE: NOVEMBER 1, 2021
SCALE: N/A
DESIGNED BY: RMS
DRAWN BY: CRE
CHECKED BY: RMS

APPROVED BY:
COMMONWEALTH OF MASSACHUSETTS
ROBERT M. SHEA
CIVIL
No. 41761
REGISTERED PROFESSIONAL ENGINEER
11/01/2021

GLOBAL PROPERTY
DEVELOPERS CORPORATION
80 FIRST STREET, BRIDGEWATER, MA 02324
TEL: (508) 697-9300 FAX: (508) 697-9206

LOWER CAMPUS FIELD
AMESBURY, MA

PREPARED FOR:
AMESBURY SPORTS VENTURES, LLC.

JOB NO.:
SHEET NO.:
2 of 2